FUNAI

VIP-3000HC/A MKIII

HQ VHS PAL

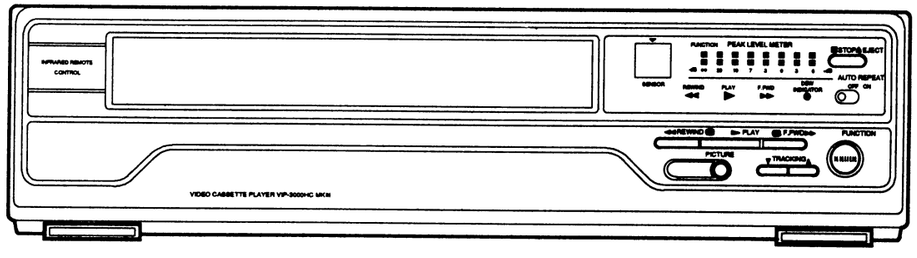

SERVICE MANUAL

TABLE OF CONTENTS

MAIN SECTION

SPECIFICATIONS

Test Items	Mode	Nominal	Limit	Test tape
1. Video Section				
1-1 Output Level	PB	1.0 Vp-p	1.0± 0.2 Vp-p	F6-A
1-2 S/N Ratio (Luminance)	PB	45 dB	40 dB	F6-D
1-3 S/N Ratio (Chroma AM)	PB	42 dB	35 dB	F6-E
1-4 S/N Ratio (Chroma PM)	PB	36 dB	31 dB	F6-E
1-5 Resolution	PB	240 Line	230 Line	F6-M
2. Servo Section				
2-1 Wow & Flutter WTD	PB	0.2 %	0.6 %	F6-M
2-2 Jitter Low	PB	0.04 μ sec	0.12 μ sec	F6-N8
3. Audio Section				
3-1 Output Level	PB	-6 dBV	-6 ± 4 dBV	F6A
3-2 S/N Ratio	PB	40 dB	36 dB	F6-A
3-3 Distortion	PB	1.5 %	4.0 %	F6-A
3-4 Freq. response at 100Hz	PB	0dB	-6 dB	F6-K
(-20 dBV ref. 1 KHz) at 6 KHz	PB	0dB	-6 dB	F6-K

Note: Nominal specs represent the designing specs; all units should be able to approximate these - some will exceed and some may drop slightly below these specs. Limit specs represent the absolute worst condition that still might be considered; in no case should a unit perform to less than within any limit spec.

INSTRUCTIONS FOR HANDLING SEMICONDUCTORS

Electrostatic breakdown of the semiconductors may occur due to a potential difference caused by electrostatic charge during unpacking or repair work.

Ground for Human Body

Be sure to wear a grounding band (1 Mohm) that is properly grounded to remove any static electricity that may be charged on the body.

Ground for Work bench

Be sure to place a conductive sheet or copper plate with proper grounding (1 Mohm) on the work bench or other surface, where the semiconductors are to be placed.

Because the static electricity charge on the clothing will not escape through the body grounding band, be careful to avoid contact of semiconductors with clothing.

INCORRECT

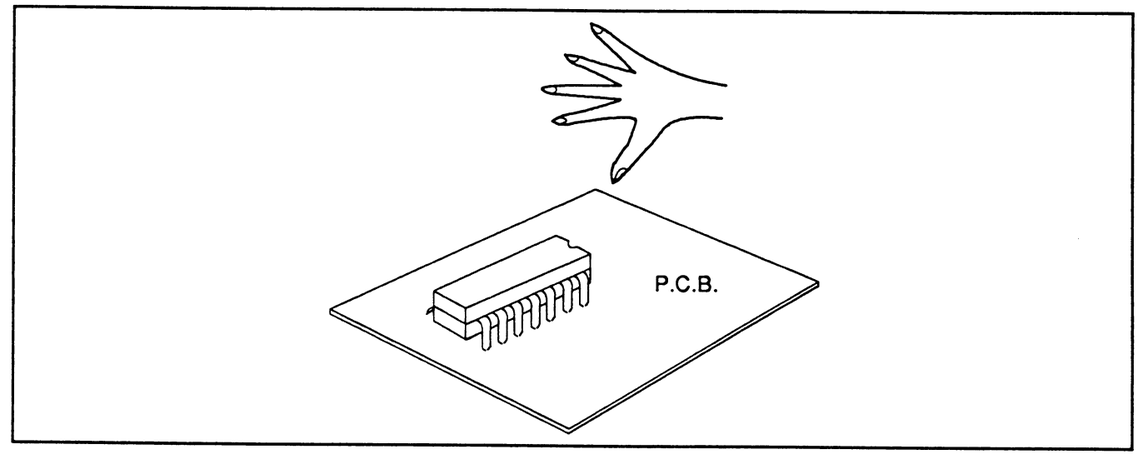

CORRECT

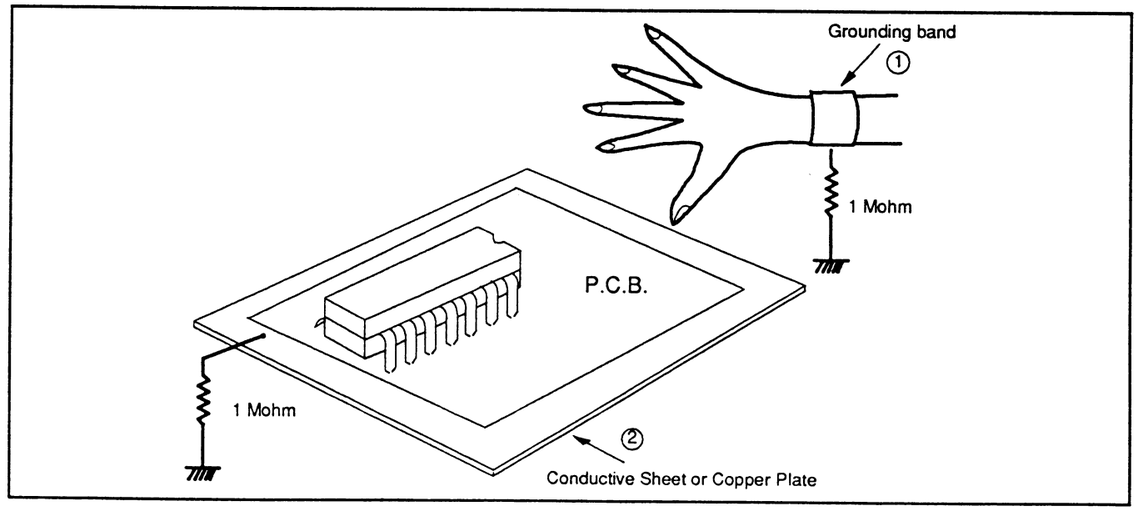

How to read the values of the cylindrical type chip components.

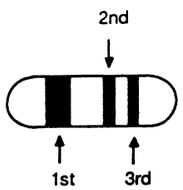

The widest color band must be read first for value.

EXAMPLE :

(a) Resistor

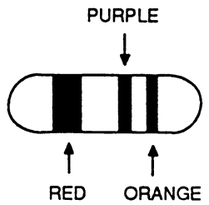

= 273 = 27 [kΩ]

(b) Capacitor

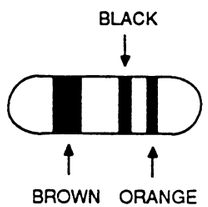

= 103 = 0.01 [uF]

CAUTION :

Once chip parts (Resistors, Capacitors, Transistors, etc.) are removed, they must not be reused. Always use a new part.

SAFETY CHECK AFTER SERVICING

Examine the area surrounding the repaired location for damage or deterioration. Observe that screws, parts and wires have been returned to original positions. Afterwards, perform the following tests and confirm the specified values in order to verify compliance with safety standards.

1. CLEARANCE DISTANCE

When replacing primary circuit components, confirm specified clearance distance (d) and (d') between soldered terminals, and between terminals and surrounding metallic parts. See Figure 1.

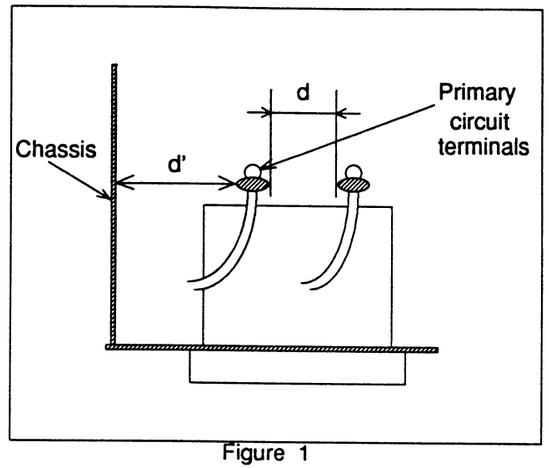

Figure 1

Table 1 : Ratings for selected area

AC Line Voltage	Region	Clearance Distance (d) (d')
220V	CHINA	≥ 6 mm (d')

Note: This table is unofficial and for reference only. Be sure to confirm the precise values.

2. LEAKAGE CURRENT TEST

Confirm specified (or lower) leakage current between B (earth ground, power cord plug prongs) and externally exposed accessible parts (RF terminals, antenna terminals, video and audio input and output terminals, microphone jacks, earphone jacks, etc.).

Measuring Method : (Power ON)

Insert load Z between B (earth ground, power cord plug prongs) and exposed accessible parts. Use an AC voltmeter to measure across both terminals of load Z. See figure 2 and following table.

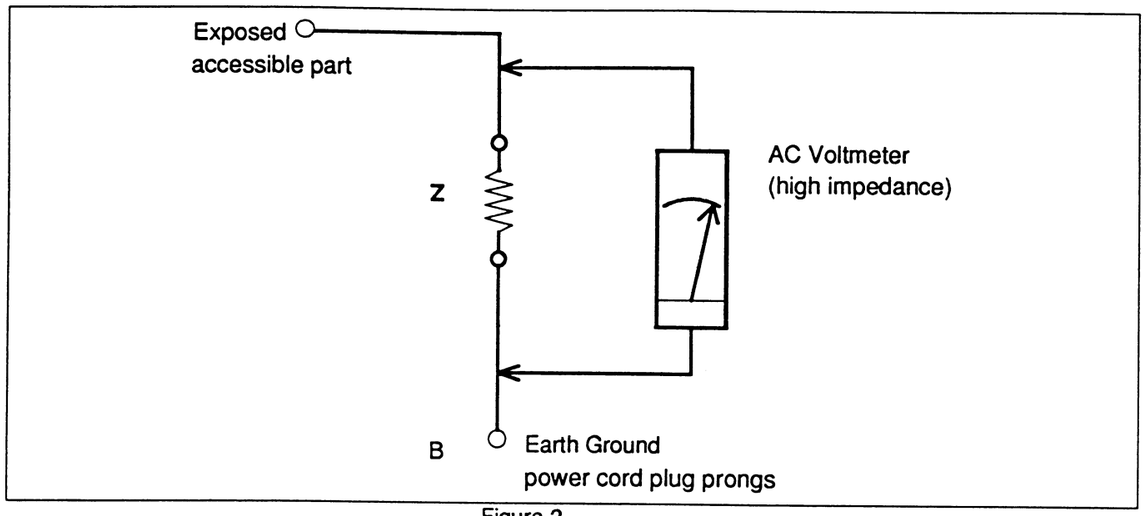

Figure 2

Table 2:

Leakage current ratings for selected areas.

AC Line Voltage	Region	Load Z	Leakage Current (i)	Earth Ground (B) to:
200 to 240 V	Europe Australia	2kΩ RES. in connected	1 ≤0.7mA Peak 1 ≤ 2 mA dc	Antenna terminals
		50kΩ RES. in connected	1 ≤0.7m A Peak 1 ≤ 2 mA dc	Other terminals

Note:

This table is unofficial and for reference only. Be sure to confirm the precise values.

IMPORTANT SAFETY PRECAUTIONS

Prior to shipment from the factory, our products are strictly inspected for recognized product safety and electrical codes of the countries in which they are to be sold. However, in order to maintain such compliance, it is equally important to implement the following precautions when a set is being serviced.

PRECAUTIONS DURING SERVICING

1. Locations requiring special caution are denoted by labels and inscribed on the cabinet, chassis and certain parts of the product. When performing service, be sure to read and comply with these and other cautionary notices appearing in the operation and service manuals.

2. Parts identified by the symbol ⚠ are critical for safety. Replace only with specified part numbers.

3. Use specified internal wiring. Note especially :
   1) Wires covered with PVC tubing
   2) Double insulated wires
   3) High voltage leads

4. Use specified insulating materials for hazardous live parts. Note especially :
   1) Insulation Tape
   2) PVC tubing
   3) Spacers
   4) Insulation sheets for transistors

5. When replacing AC primary side components (transformers, power cords, noise blocking capacitors, etc.) wrap ends of wires securely around the terminals before soldering.

6. Observe that wires do not contact heat producing parts (heat sinks, oxide metal film resistors, fusible resistors, etc.)

7. Check that replaced wires do not contact sharp edged or pointed parts.

8. When a power cord has been replaced, check that 10-15 kg (23-34.5lbs) of force in any direction will not loosen it.

9. Also check areas surrounding repaired locations.

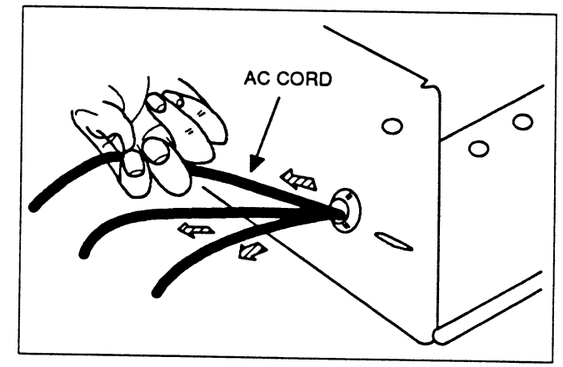

DISASSEMBLY INSTRUCTIONS

DISASSEMBLY FLOW CHART

This flow chart indicates the disassembly steps of the cabinet parts, the P.C. Boards in order to gain access to item (s) to be serviced. When reassembling, perform the step (s) in the reverse order. Bend, route and dress the Cabinet as they were originally.

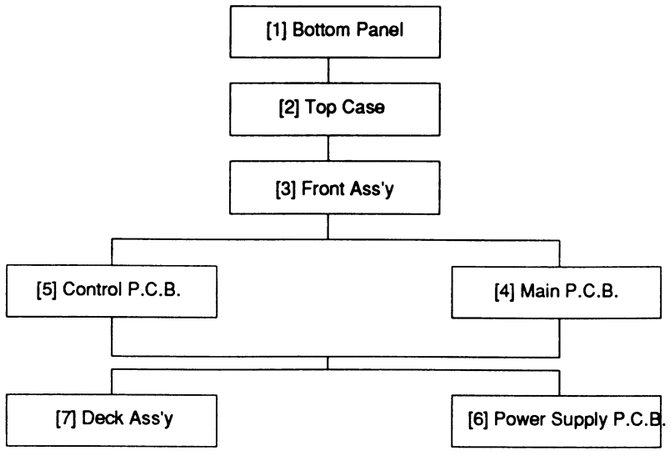

DISASSEMBLY METHOD

STEP /LOC. NO.	PART		REMOVAL	
		Fig. No.	REMOVE/✱UNLOCK/RELEASE/UNPLUG/UNCLAMP/UNSOLDER	NOTE
[1]	Bottom Panel	Fig. 1	4(S-1), ✱4(L-1)	1
[2]	Top Case	Fig. 2	(S-2), ✱(L-2)	—
[3]	Front Ass'y	Fig. 3, 4	✱6(L-3), 2(S-3)	2
[4]	Main P.C.B.	Fig. 5	✱2(L-4) ✱ Connectors (K6050, CND2, CND3, CND4, CND5)	3
[5]	Control P.C.B.	Fig. 6	✱2(L-5)	—
[6]	Power Supply P.C.B.	Fig. 7	2(S-4), ✱2(L-6)	—
[7]	Deck Ass'y	Fig. 7	3(S-5)	4

① ② ③ ④

Note:

①: Order of steps in Procedure
When reassembling, perform step (s) in the reverse order.
These numbers are also used as the identification (location) number of parts in Figures.

②: Part to be removed or installed.

③: Fig. No. showing Procedure or Part Location.

④: Identification of part to be removed, unhooked, unlocked, released, unplugged, unclamped or unsoldered.
P= Spring W= Washer C= Cut Washer R= Retaining Ring
N= Nut S= Screw ✱= Unhook, unlock, release, unplug or unsolder
2 (C-2) = 2 Cut Washers (C-2)

1. Remove 5 Screws (S-1), and release 4 Locking Tabs (L-1) then slide the Bottom Panel in the direction of arrow.
2. Release 6 Locking Tabs (L-3) then remove 2 Screws (S-3).

Note: When you reinstall the Front Ass'y, take care not to break the Locking Tabs. First install the Locking Tab (A), then install the Locking Tab (B), holding up the Cassette Door to align the Cassette Door Lift.

3. Release 2 Locking Tab (L-4), then disconnect (K6050, CND2, CND3, CND4, CND5).

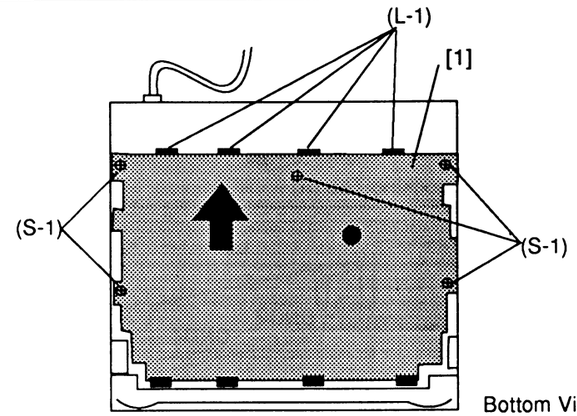

Bottom View

Fig. 1

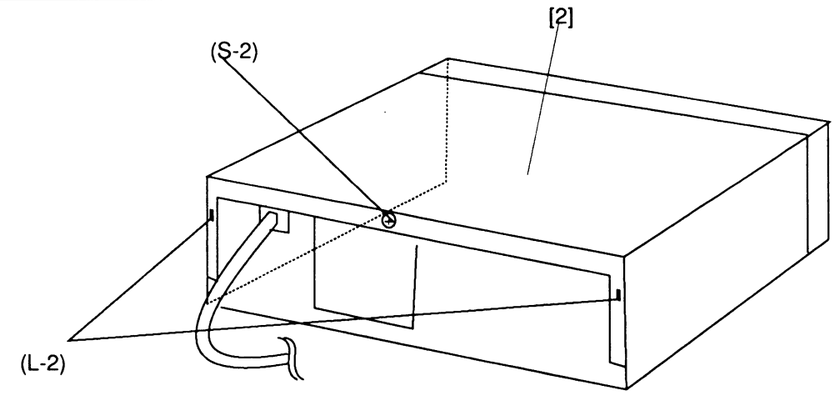

Rear View

Fig. 2

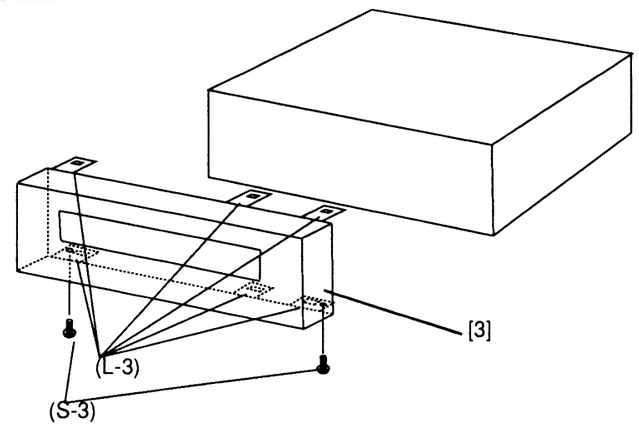

Fig. 3

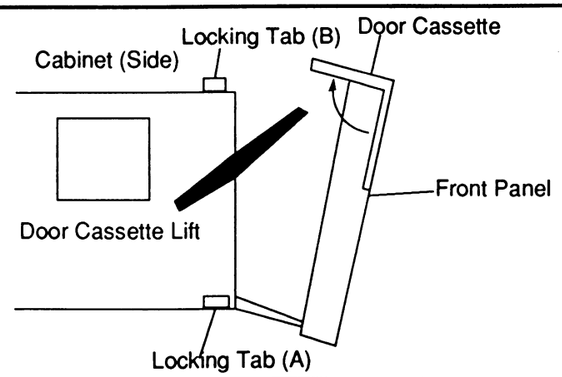

Fig. 4

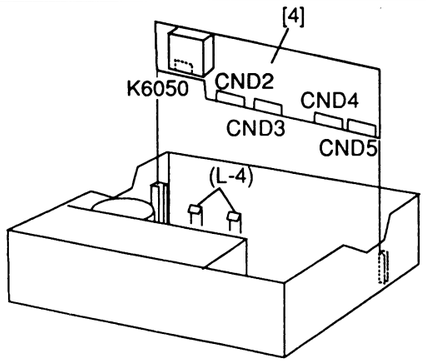

Fig. 5

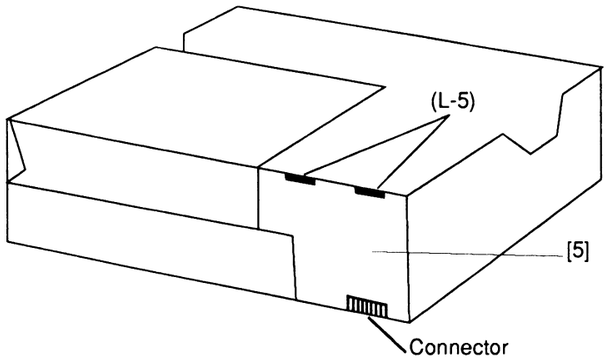

Fig. 6

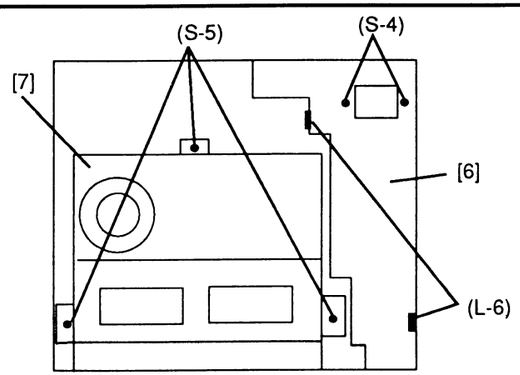

Fig. 7

BLOCK DIAGRAMS

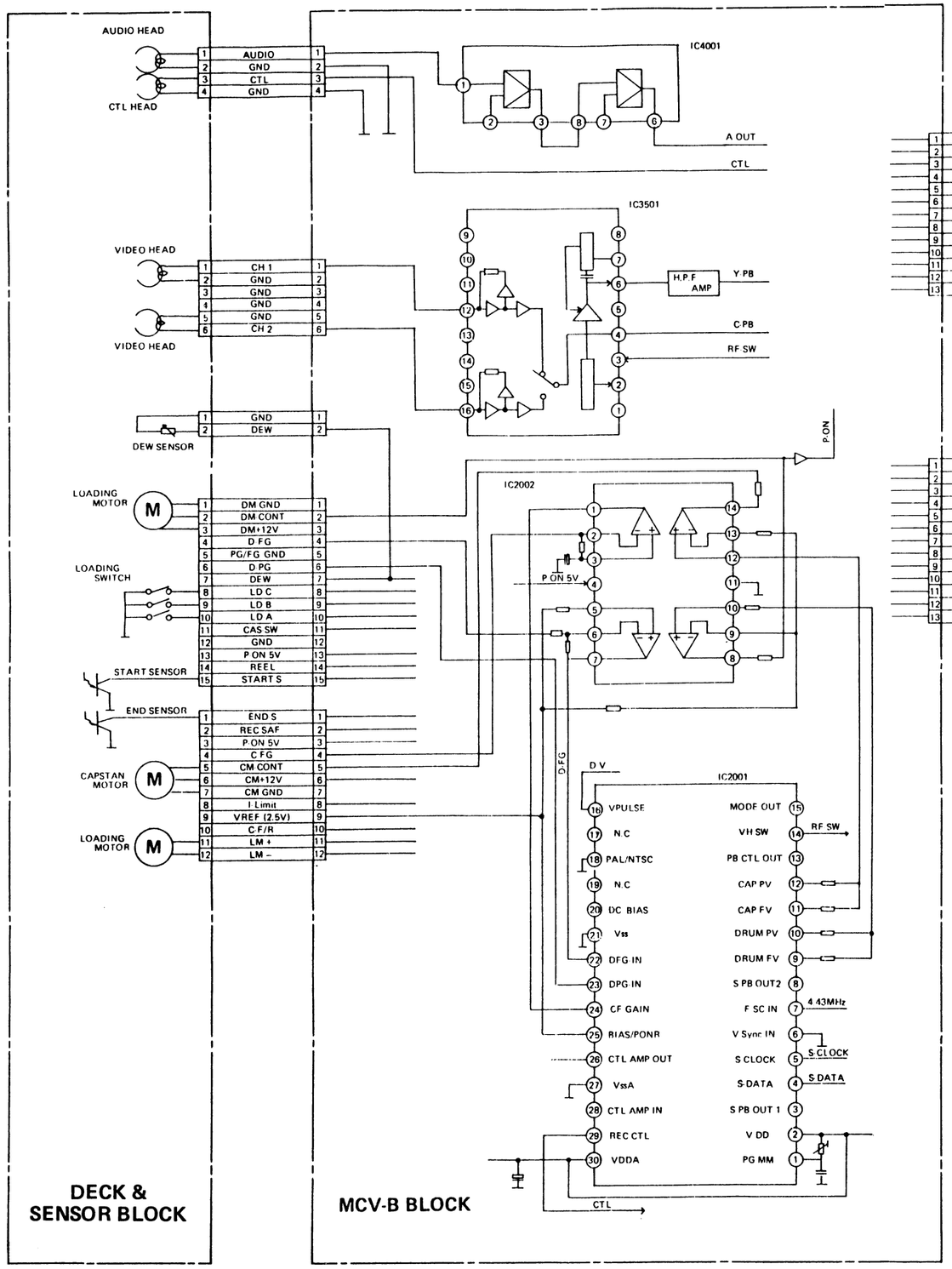

DECK & SENSOR BLOCK

MCV-B BLOCK

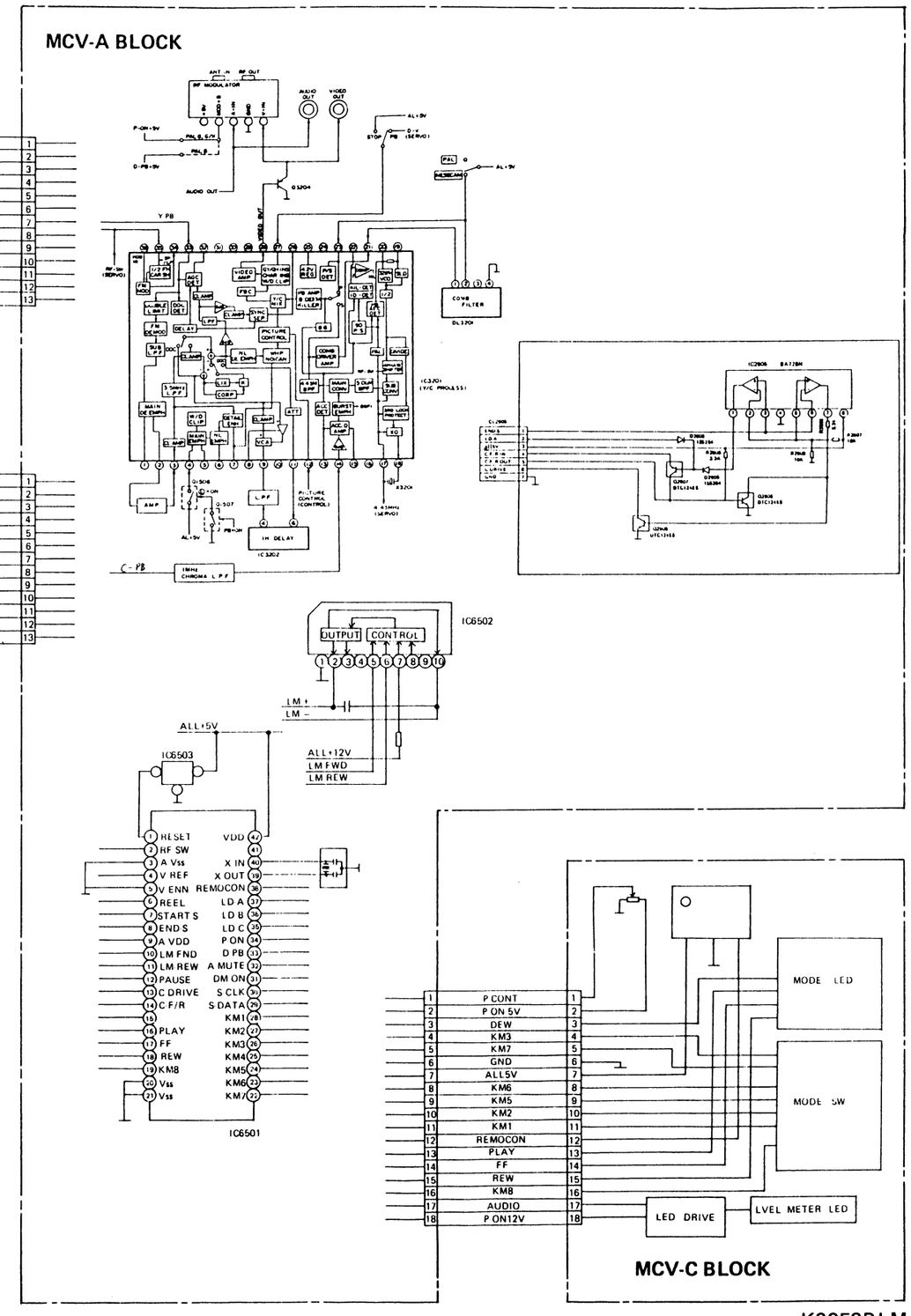

K6050BLM

ALIGNMENT INSTRUCTIONS

PREPARATION

Electrical adjustments are required after replacing circuit components and certain mechanical parts.
It is important to perform these adjustments only after all repairs and replacements have been completed.
Also, do not attempt these adjustments unless the proper equipment is available.

TEST EQUIPMENT REQUIRED

1. Oscilloscope: Dual-trace with 10:1 probe
2. TV Monitor
3. Alignment Tape: F6-A

HEAD SWITCHING POINT ADJUSTMENT

Purpose:

Determine the Head Switching Point during Playback.

Symptom of Misadjustment:

May cause Head Switching Noise and/or Vertical Jitter in the picture.

Test Point	Adj. Point	Mode	Input
V-OUT (TP7501) RF-SW (TP2001)	Switching Point (VR2001)	Play	75% Color Bar
Tape	M. EQ.	Spec.	
F6-A	Oscilloscope	See Below	

Connections of M. EQ.

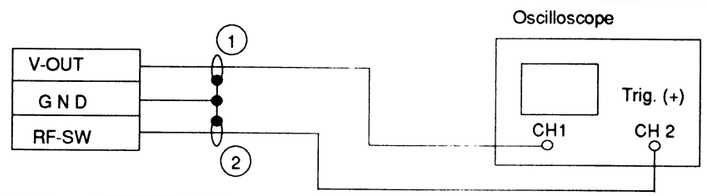

Figure

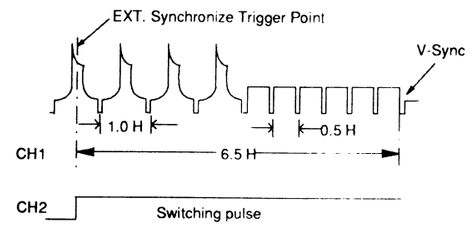

Note:

TP7501: MCV-A PCB
TP2001, VR2001: MCV-B PCB

Reference notes:

1. Connect the CH1 probe to TP7501 and ground, the CH2 probe to TP2001, and set the input trigger mode to CH2.
2. Set trigger slope to (+).
3. Playback the test tape and adjust VR2001 so that the V-sync. front edge of CH1 video output waveform is delayed 6.5H (412.7μs) from the rising of CH2 Head Switching Pulse waveform.

WIRING DIAGRAM

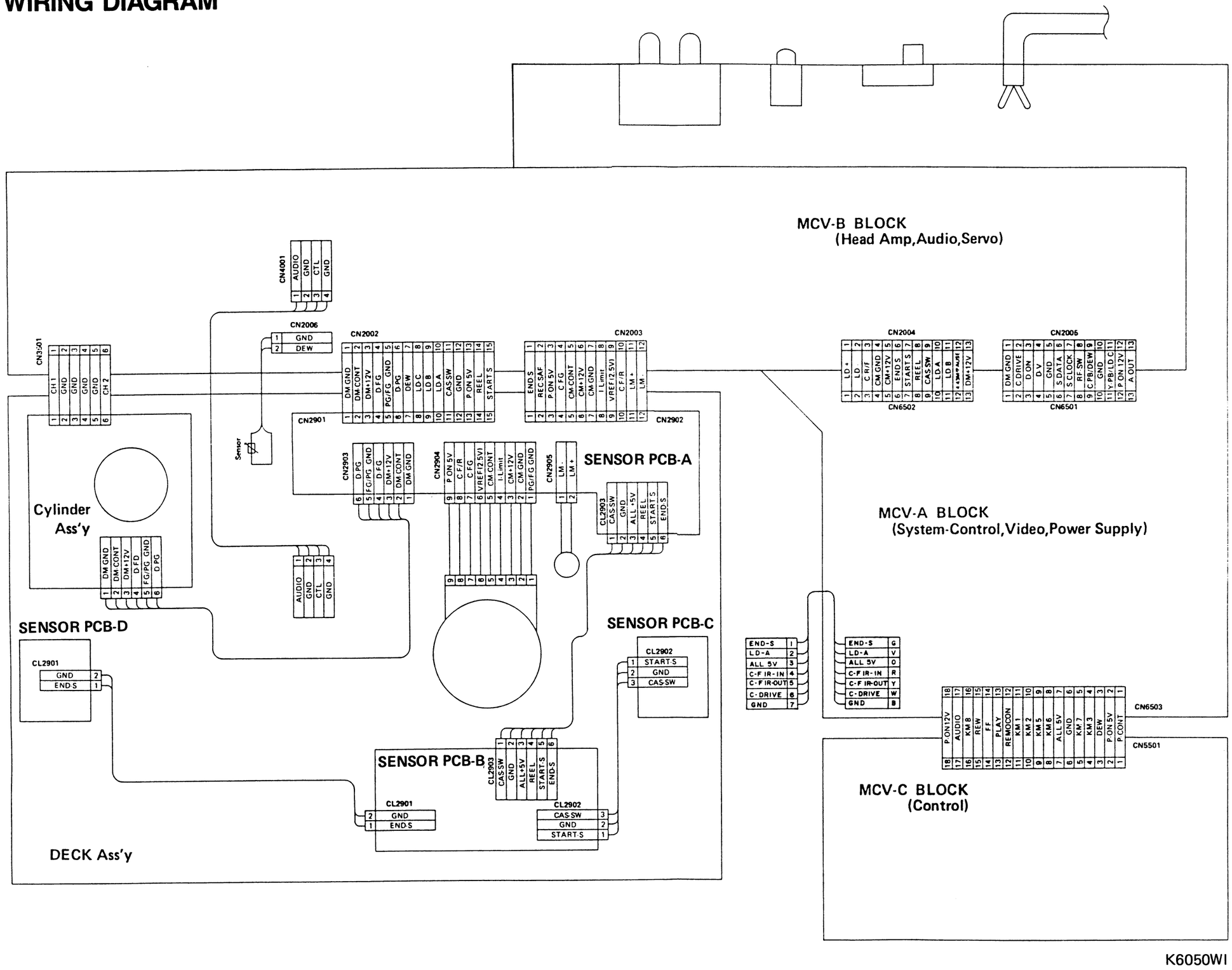

MCV-A (VIDEO/SYSTEM CONTROL/POWER SUPPLY) SCHEMATIC DIAGRAM

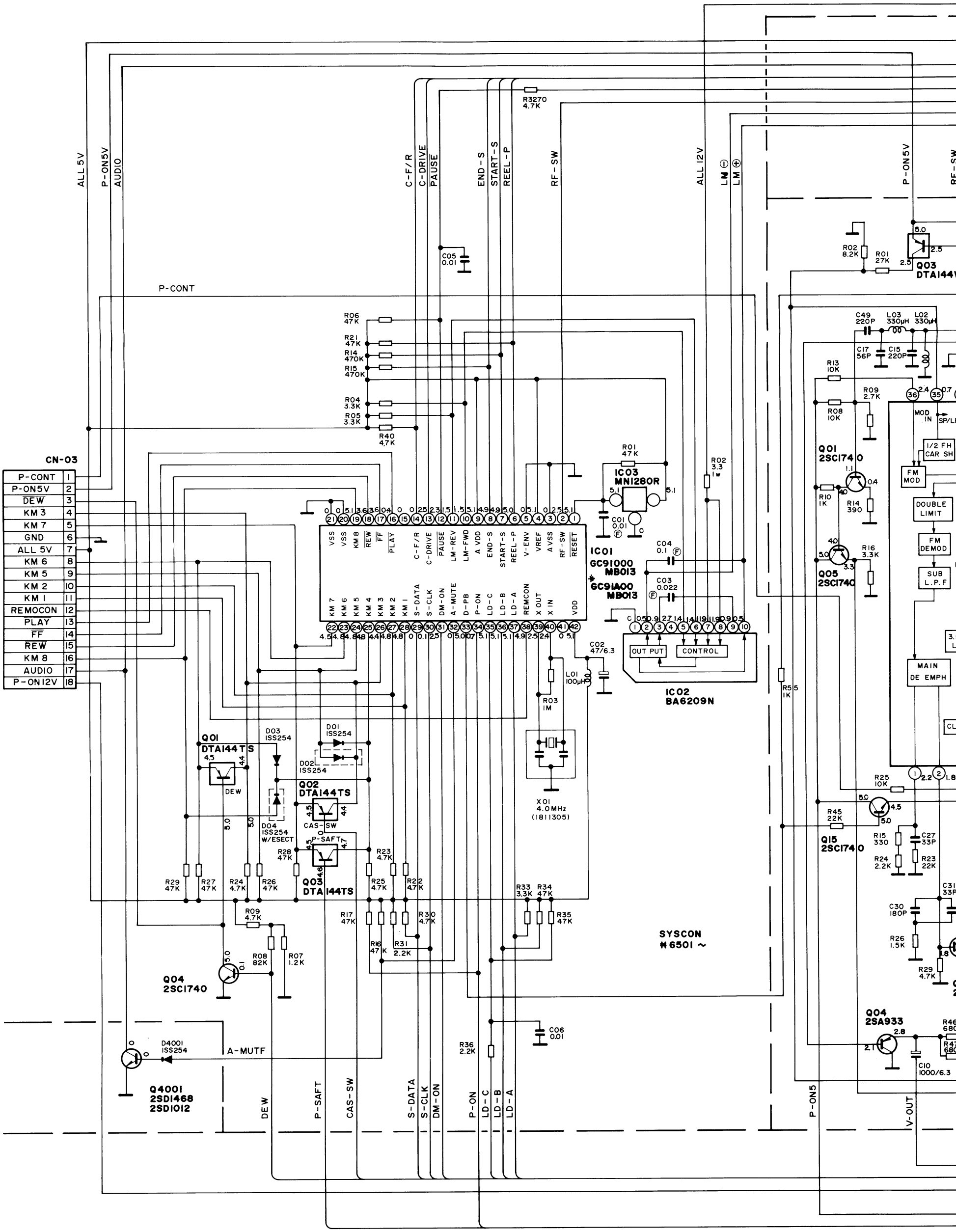

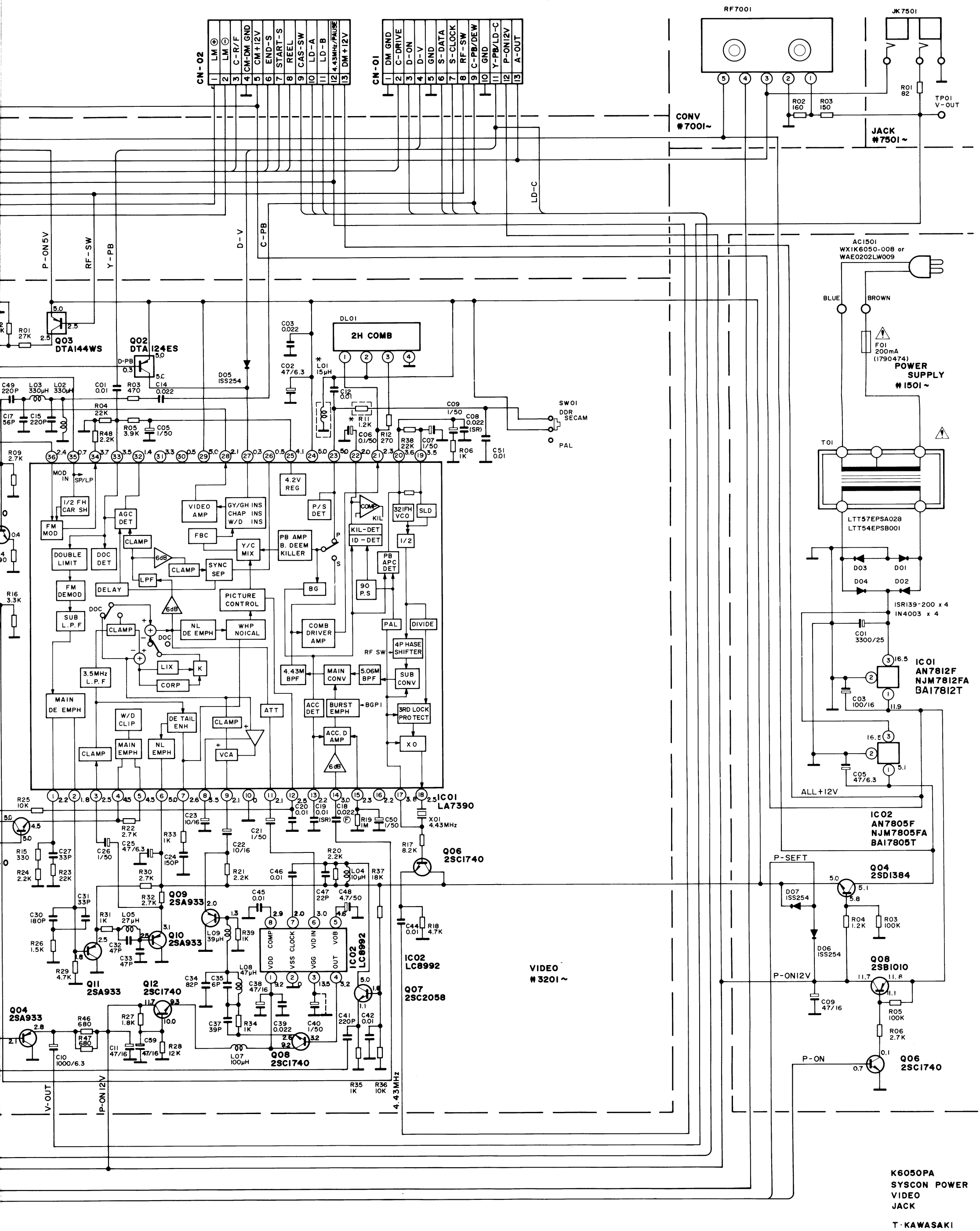
CN-02
LM ⊕
LM ⊖
C-R/F
CM-DM GND
CM+12V
END-S
START-S
REEL
CAS-SW
LD-A
LD-B
4.43MHz/PAUSE
DM+12V
CN-01
DM GND
C-DRIVE
D-ON
D-V
GND
S-DATA
S-CLOCK
RF-SW
C-PB/DEW
GND
Y-PB/LD-C
P-ON12V
A-OUT
RF7001
JK7501
CONV #7001~
JACK #7501~
TP01 V-OUT
AC1501 WX1K6050-008 or WAE0202LW009
BLUE
BROWN
F01 200mA (1790474)
POWER SUPPLY #1501~
T01
LTT57EPSA028
LTT54EPSB001
IC01 AN7812F NJM7812FA BA17812T
IC02 AN7805F NJM7805FA BA17805T
ALL+12V
P-SEFT
P-ON12V
P-ON
Q04 2SD1384
Q08 2SB1010
Q06 2SC1740
DL01 2H COMB
IC01 LA7390
Q06 2SC1740
Q07 2SC2058
IC02 LC8992
Q03 DTA144WS
Q02 DTA124ES
SW01 DDR SECAM
PAL
VIDEO #3201~
K6050PA
SYSCON POWER
VIDEO
JACK
T·KAWASAKI

MCV-B (SERVO/HEAD AMP/AUDIO) SCHEMATIC DIAGRAM

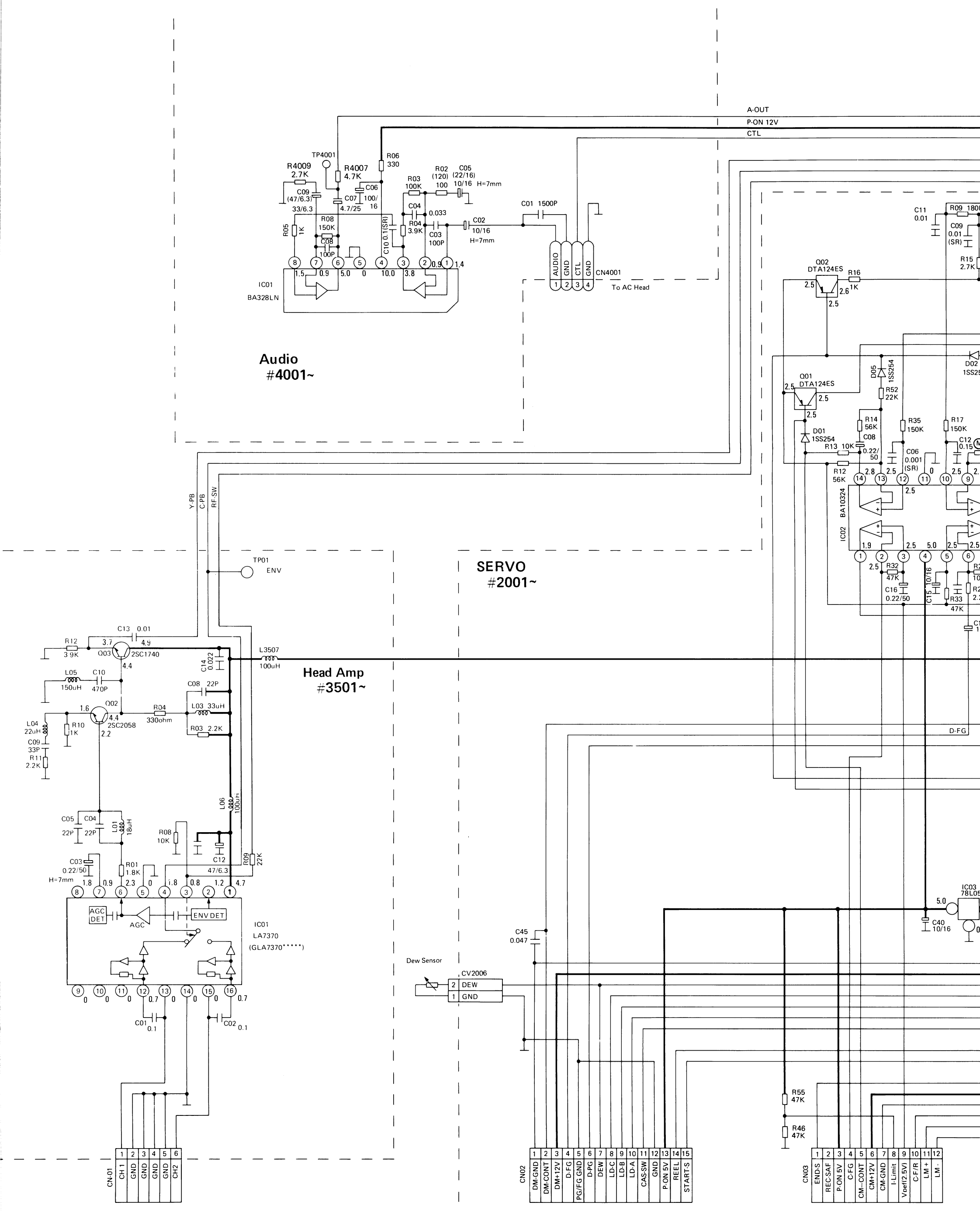

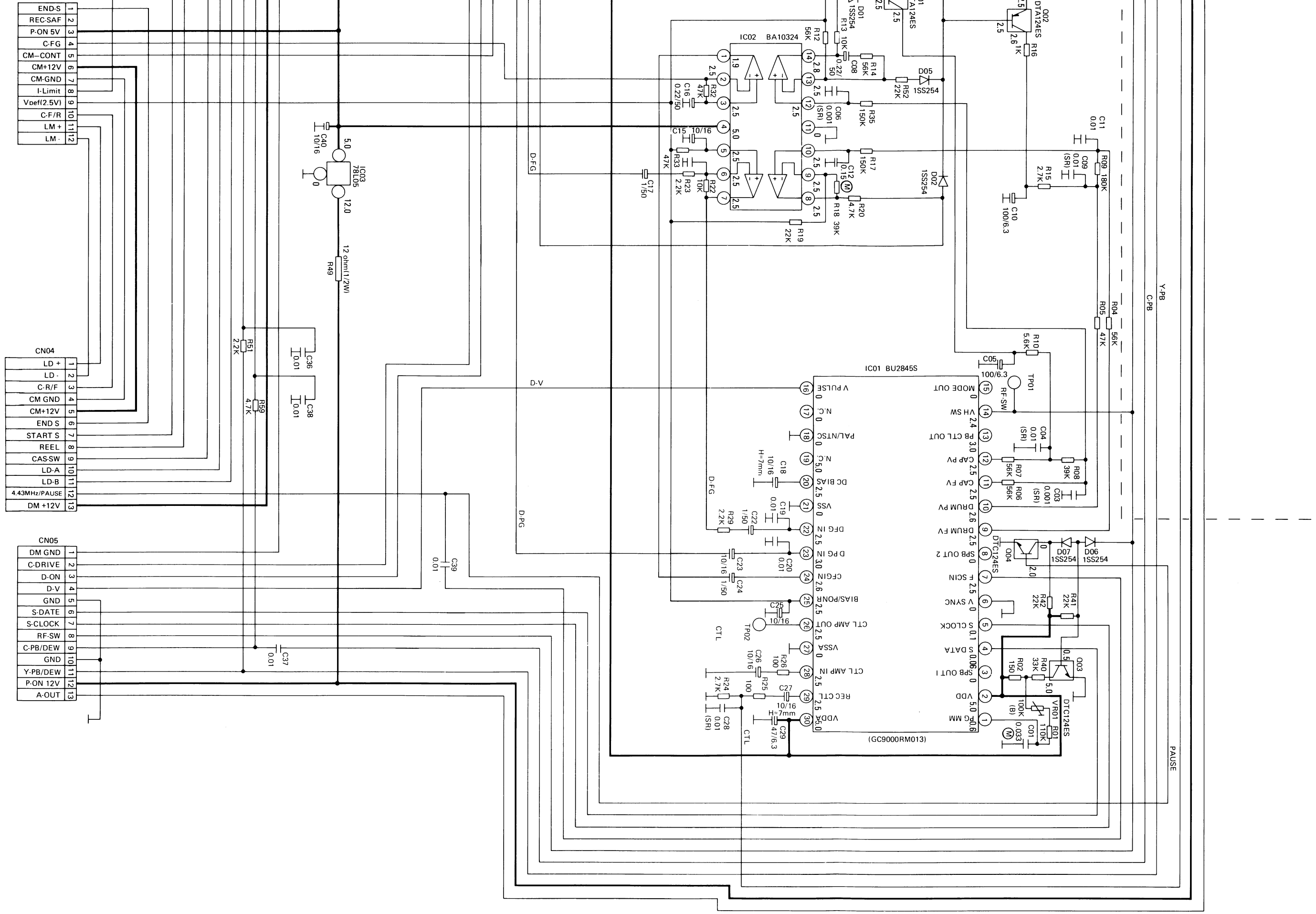
CN04
LD +
LD -
C-R/F
CM GND
CM+12V
END S
START S
REEL
CAS-SW
LD-A
LD-B
4.43MHz/PAUSE
DM +12V
CN05
DM GND
C-DRIVE
D-ON
D-V
GND
S-DATE
S-CLOCK
RF-SW
C-PB/DEW
GND
Y-PB/DEW
P-ON 12V
A-OUT
END-S
REC-SAF
P-ON 5V
C-FG
CM-CONT
CM+12V
CM-GND
I-Limit
Vref(2.5V)
C-F/R
LM +
LM -
IC03 78L05
IC02 BA10324
IC01 BU2845S
(GC9000RM013)
D-FG
D-V
D-PG
CTL
PAUSE
Y-PB
C-PB

MCV-B (SERVO/ HEAD AMP/AUDIO) PCB TOP VIEW

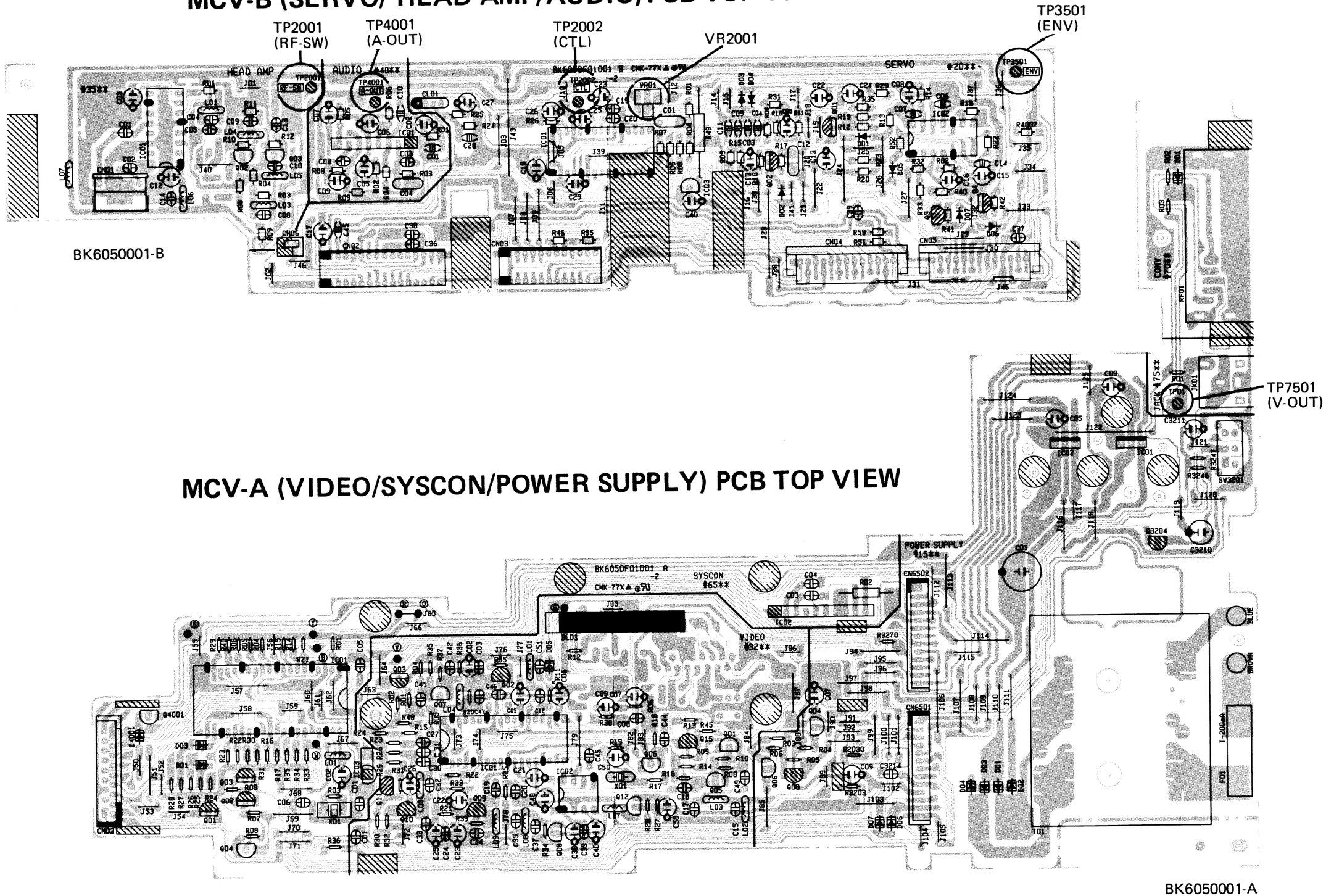

MCV-A (VIDEO/SYSCON/POWER SUPPLY) PCB TOP VIEW

MCV-B (SERVO/HEAD AMP/AUDIO) BOTTOM VIEW

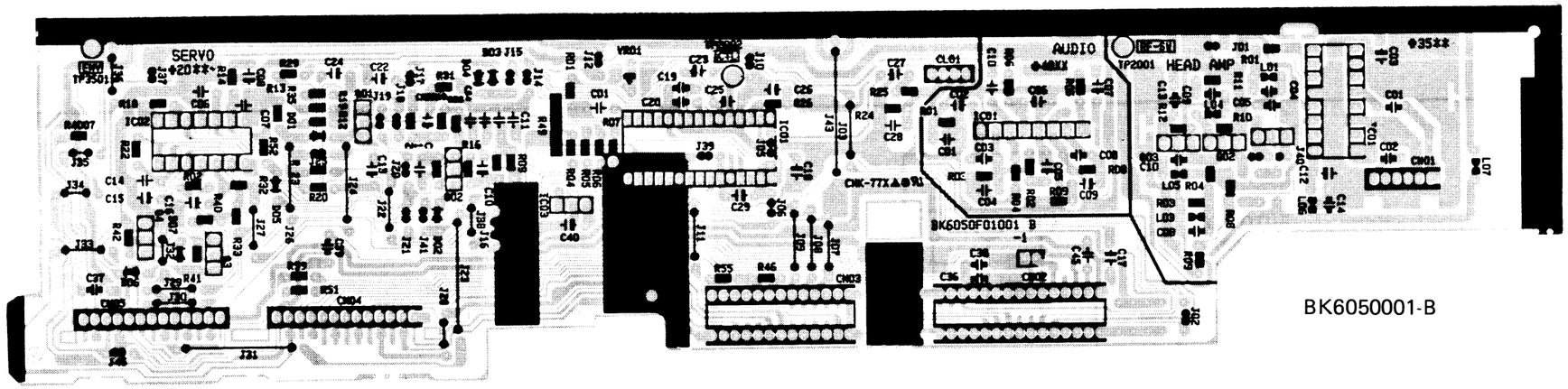

BK6050001-B

MCV-A (VIDEO/SYSCON/POWER SUPPLY) PCB BOTTOM VIEW

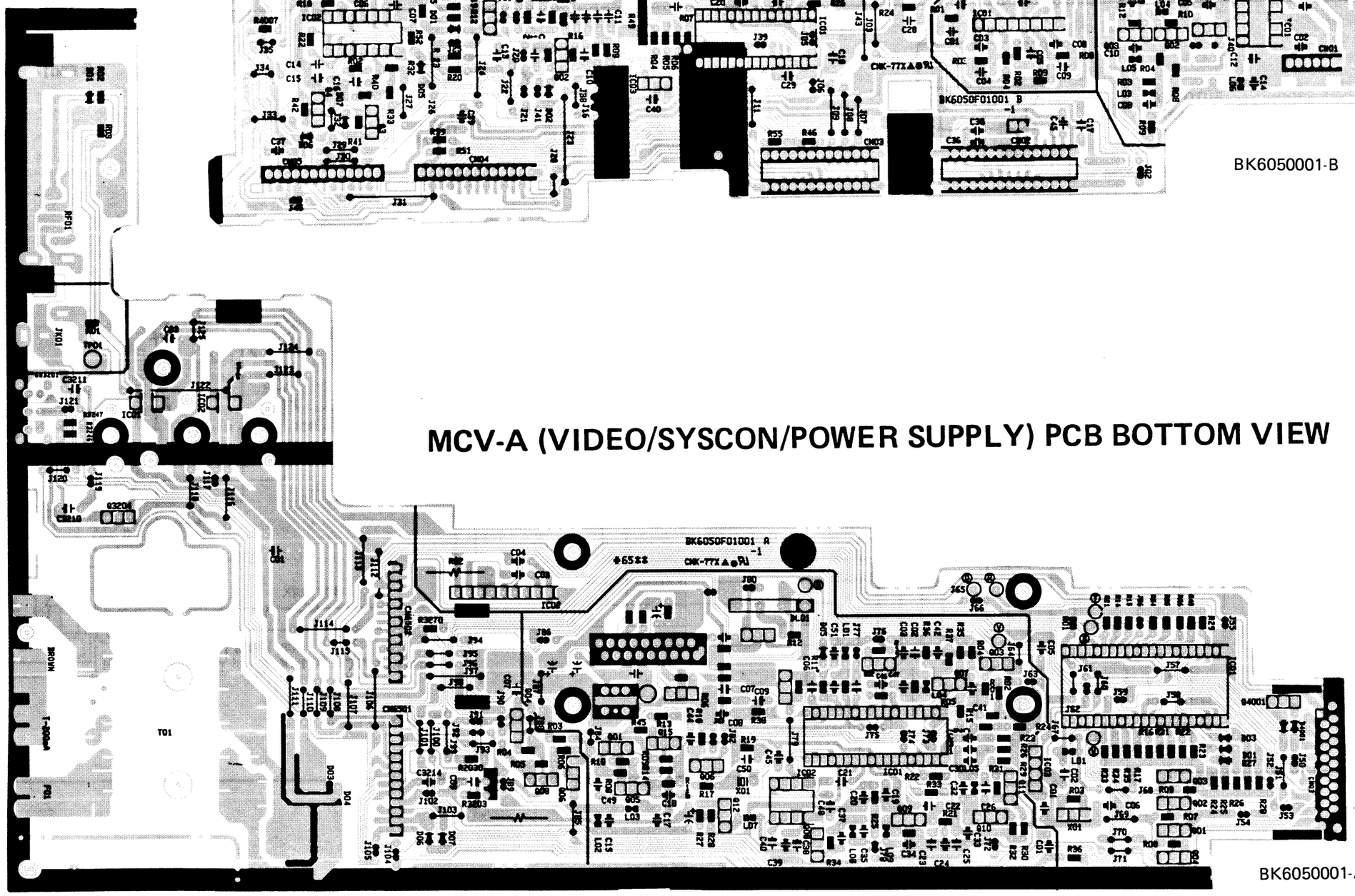

BK6050001-A

MCV-C (CONTROL) SCHEMATIC DIAGRAM

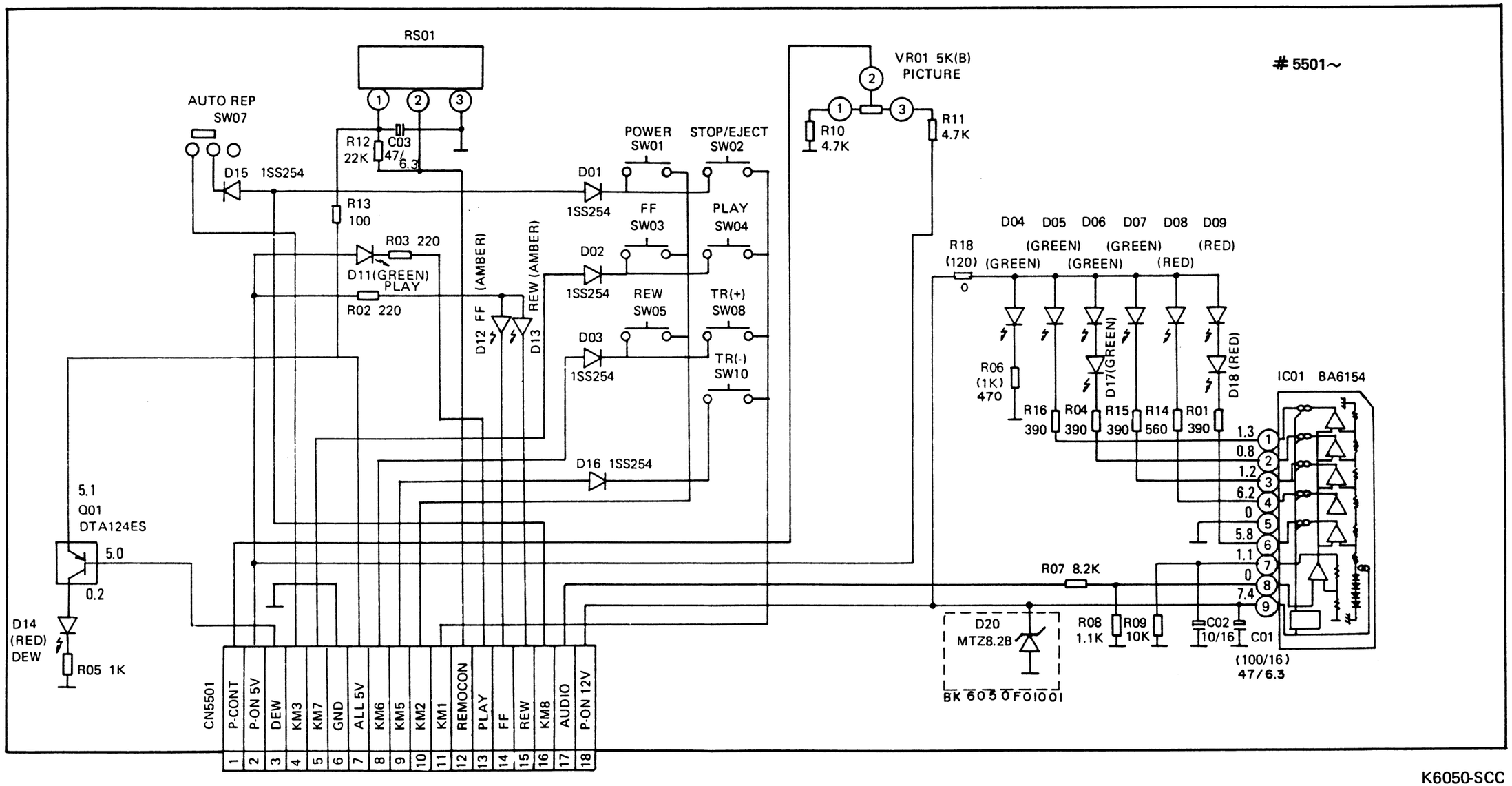

K6050-SCC

MCV-C (CONTROL) TOP VIEW

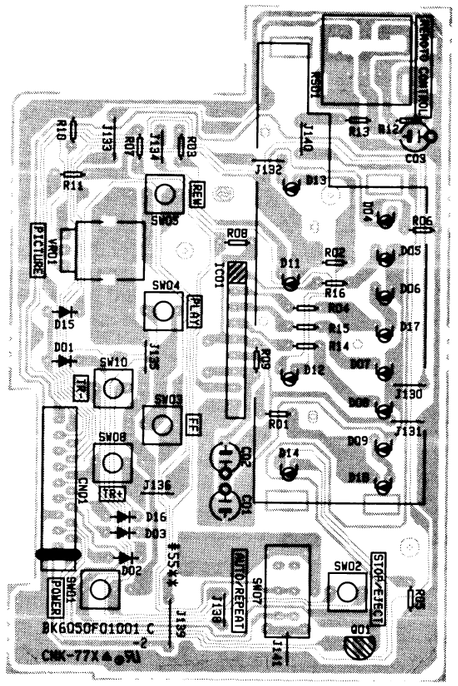

BK6050001-C

MCV-C (CONTROL) BOTTOM VIEW

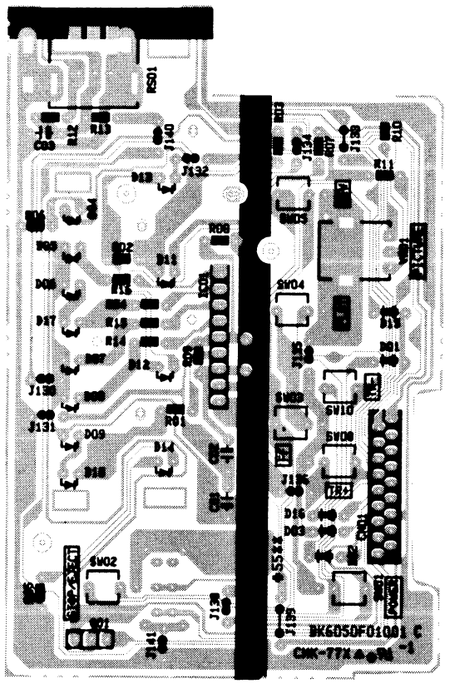

BK6050001-C

WAVEFORM PHOTOGRAPHS

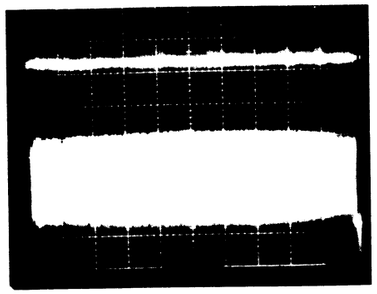

CH1 TP3501 (ENV)
50mV x 1/div.
2m sec/div.
CH2 TP2001 (RF-SW)
1V x 10/div.
2m sec/div.
MODE: PB–F6-N8

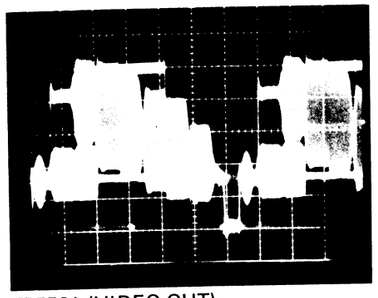

TP7501 (VIDEO OUT)
0.2V x 10/div.
10u sec/div.
MODE: PB–F6-A

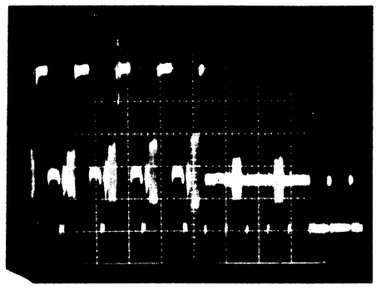

CH1 TP7501 (V-OUT)
0.2V x 10/div.
50u sec/div.
CH2 TP2001 (RF-SW)
MODE: PB–F6-A

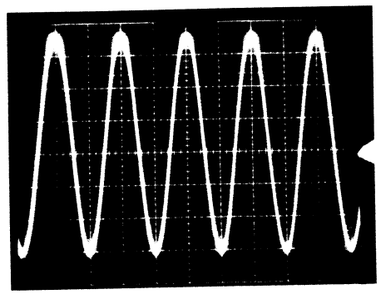

AUDIO OUT (RCA Jack)
0.2V x 10/div.
0.5u sec/div.
MODE: PB–F6-A

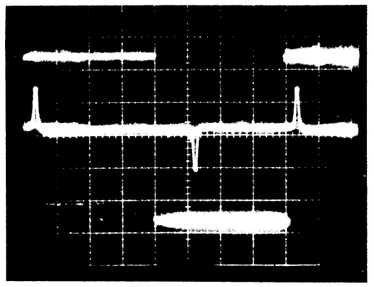

CH1 TP2002 (CTL)
2V x 1/div.
5m sec/div.
CH2 TP200i (RF-SW)
1V x 1-/div.
5m sec/div.
MODE: PB–F6-A

K6050WF

IC PIN FUNCTION DESCRIPTION

M50727-XXXSP

Pin No.	Port	Signal Name	Description	I/O	Active Level
1	RESET		RESET INPUT	I	L
2	INT	RFS	TRACKING REFERENCE SIGNAL	I	TO LOW
3	AVSS		GND	-	-
4	VREF		A/D REFERENCE VOLTAGE INPUT (+5V)	I	-
5	K0	V-ENV	VIDEO ENVELOPE INPUT	I	A/D
6	K1	REEL	REEL PULSE SIGNAL INPUT	I	~
7	K2	STARTS	TAPE START SENSOR SIGNAL INPUT	I	H
8	K3	ENDS	TAPE END SENSOR SINGAL INPUT	I	H
9	AVDD		POWER SUPPLY FOR A/D (+5V)	-	-
10	S0	LMFP	LOADING MOTOR CONTROL OUTPUT (FWD)	O	H
11	S1	LMRP	LOADING MOTOR CONTROL OUTPUT (REV)	O	H
12	S2	PLUG	PLUNGER OUTPUT	O	H
13	S3	ILMT	CAPSTAN MOTOR CONTROL OUTPUT (ON/OFF)	O	H
14	S4	REWH	CAPSTAN MOTOR CONTROL OUTPUT (FF/REW)	O	H
15	S5	ARPLED	AUTO REPLAY MODE DISPLAY OUTPUT	O	L
16	S6	PLYLED	PLAY MODE DISPLAY OUTPUT	O	L
17	S7	FFLED	FF MODE DISPLAY OUTPUT	O	L
18	D0	REWLED	REW MODE DISPLAY OUTPUT	O	L
19	D1	RET1	KEY RETURN INPUT 1	I	L
20	CNVSS		GND	-	-
21	VSS		GND	-	-
22	D2	RET2	KEY RETURN INPUT 2	I	L
23	D3	RET3	KEY RETURN INPUT 3	I	L
24	D4	RET4	KEY RETURN INPUT 4	I	L
25	D5	SCN1	KEY SCAN OUTPUT 1	O	L
26	D6	SCN2	KEY SCAN OUTPUT 2	O	L
27	D7	SCN3	KEY SCAN OUTPUT 3	O	L
28	D8	SCN4	KEY SCAN OUTPUT 4	O	L
29	D9	S-DATA	SERIAL DATA OUTPUT TO SERVO IC	O	H/L
30	D10	S-CLK	SERIAL CLOCK OUTPUT TO SERVO IC	O	~
31	F0	DRUM	DRUM MOTOR OUTPUT	O	H
32	F1	A-MUTE	AUDIO MUTE OUTPUT	O	H
33	F2	D-PB	VIDEO MUTE OUTPUT	O	L
34	F3	POWER	POWER OUTPUT	O	H
35	G0	LD-C	DECK MODE SWITCH-C INPUT	I	L
36	G1	LD-B	DECK MODE SWITCH-B INPUT	I	L
37	G2	LD-A	DECK MODE SWITCH-A INPUT	I	L
38	G3	REMO	REMOTE CONTROL INPUT	I	L
39	XOUT		CLOCK OUTPUT 4MHz	O	-
40	XIN		CLOCK INPUT 4MHz	I	-
41	CNTR		NC (GND)	-	-
42	VDD		POWER SUPPLY (+5V ADD)	-	-

K6050PIN

SYSTEM CONTROL TIMING CHART

1. OFF→CASSETTE INSERT→F.F.→STOP→REW→STOP→PLAY

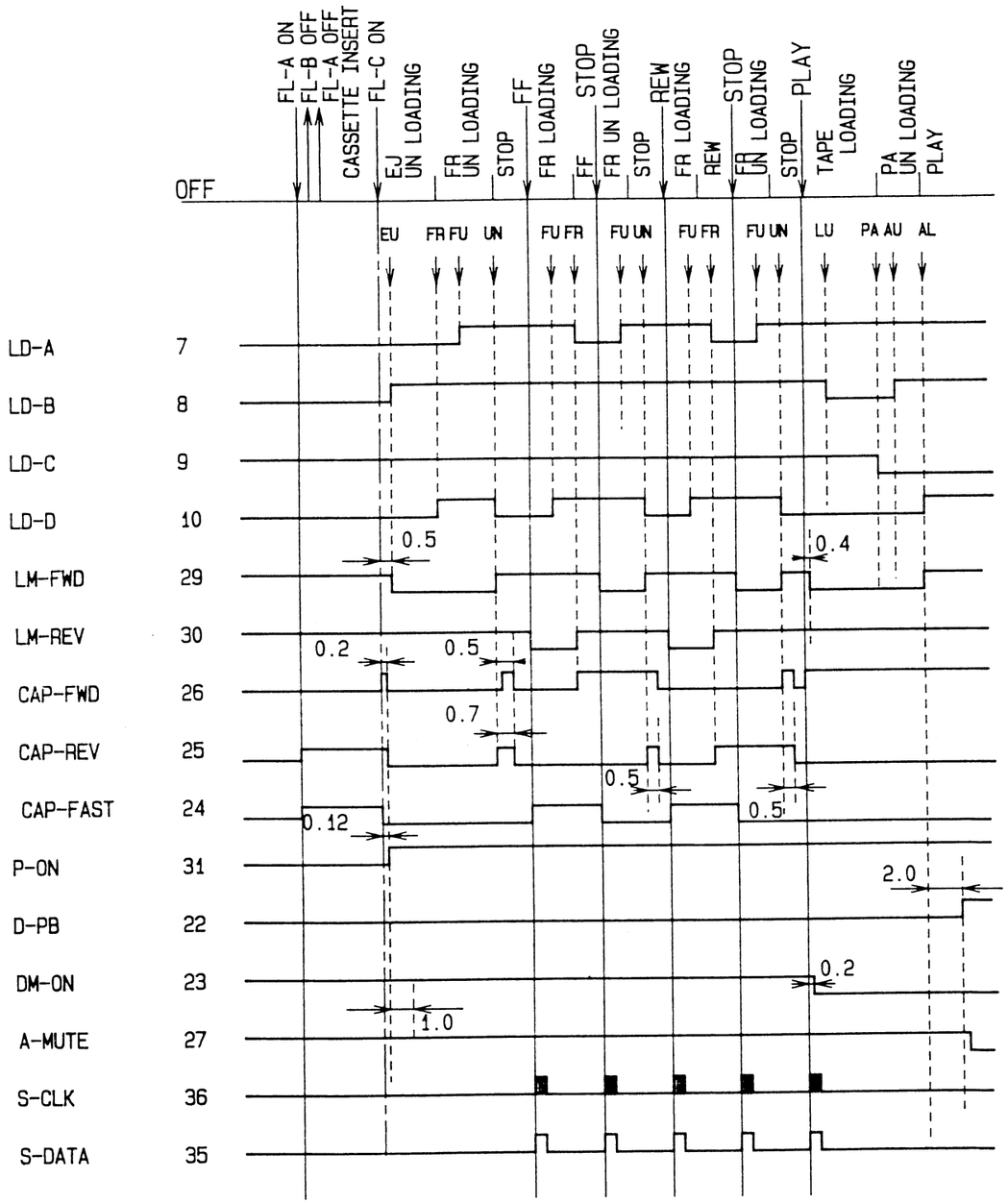

2. PLAY→F.F.→REW (RS)→PLAY→STOP→EJECT

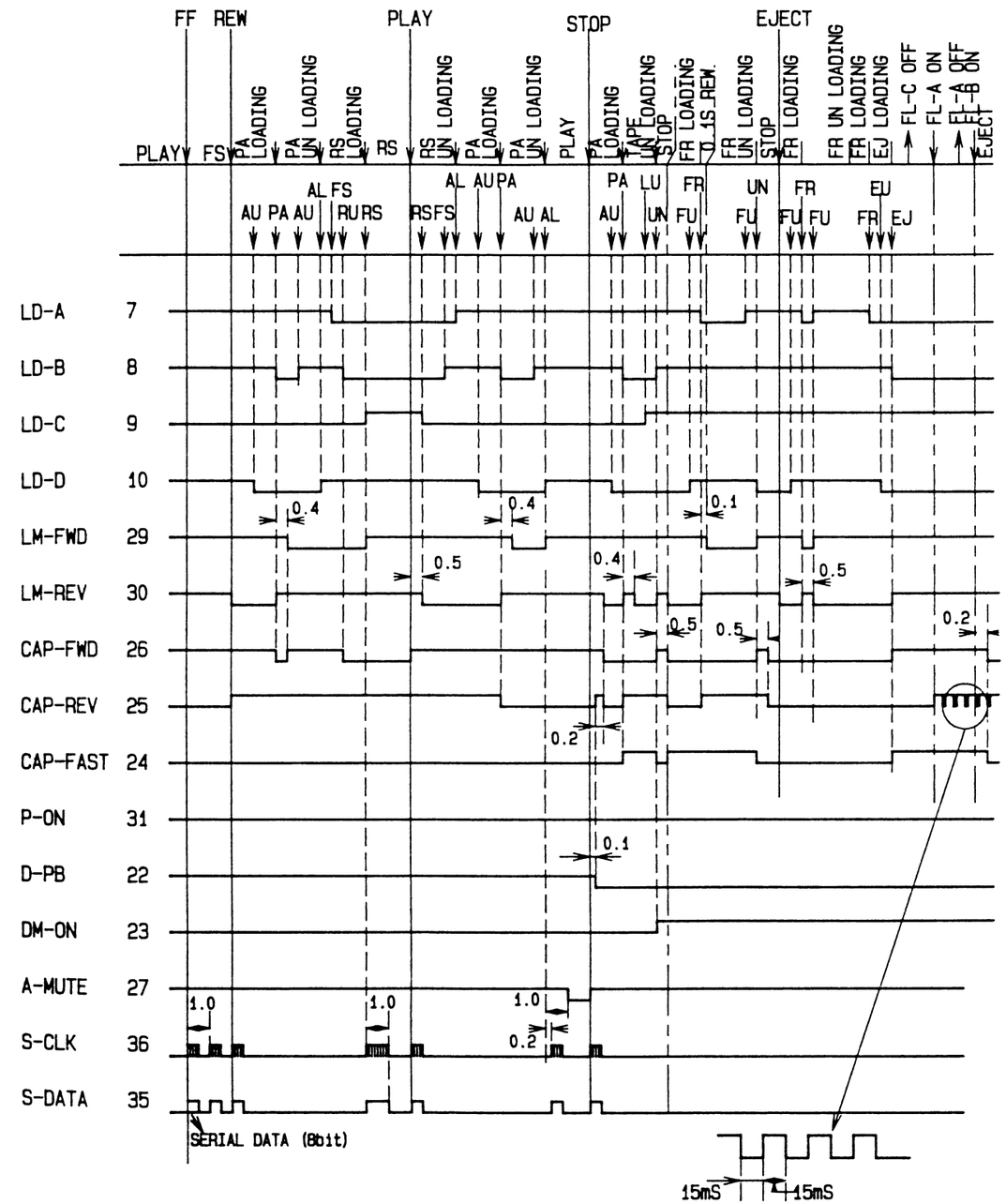

LEAD IDENTIFICATIONS

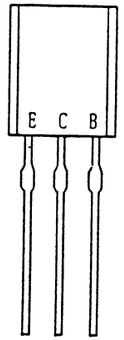

2SA608
2SA933
2SA1346
2SB892
2SB1010
2SC536
2SC1740
2SC2058
2SC2839

2SC3400
2SD1012
2SD1207
2SD1384
2SD1468
DTA124
DTA144
DTC124

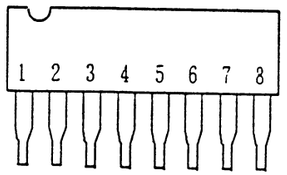

BA328LN

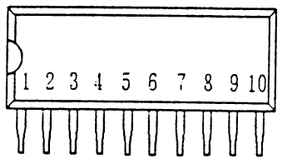

BA6209N

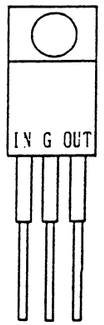

AN7812
NJM7812
AN7805
NJM7805
BA1712T
BA17805T

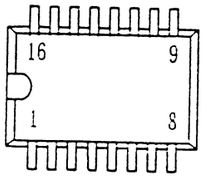

LA7370

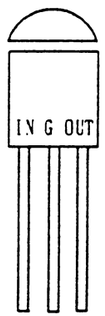

PST529
AN78L05
NJM78L05

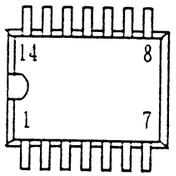

BA10324

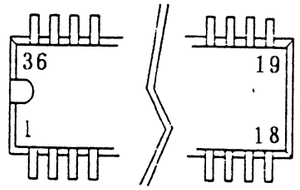

LA7390

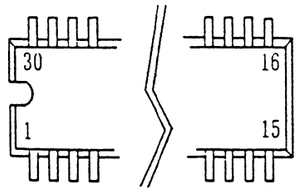

GC90000RM013

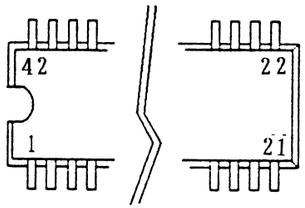

GC91000MB013

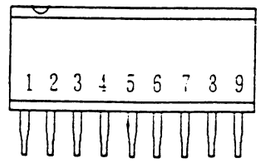

BA6154

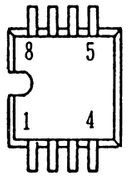

LC8992

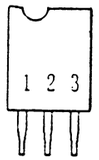

MN1280-R

ELECTRICAL PARTS LIST

PRODUCT SAFETY NOTE: Products marked with a ⚠ have special characteristics important to safety. Before replacing any of these components, read carefully the product safety notice of this service manual. Don't degrade the safety of the product through improper servicing.

*Tolerance of Capacitors and Resistors are noted with the following symbols.

C.....±0.25%	J.....±5%	Z.....+80/-20%
D.....±0.5%	K.....±10%	X.....+40/-20%
F.....±1%	M.....±20%	P.....+100%
G.....±2%	N.....±30%	

MCV-A PCB ASSEMBLY

Ref. No.	Description	Part No. VIP-3000HCMKIII	Part No. VIP-3000AMKIII
	ASSEMBLY MCB-A PCB CONSISTS OF THE FOLLOWING:	0VSA04108-A	←
	CAPACITORS		
C 1501	ELECTROLYTIC CAP. 3300uF/25V M W/F	626D338	←
C 1503	ELECTROLYTIC CAP. 100uF/16V M	126C107S	←
C 1505	ELECTROLYTIC CAP. 47uF/6.3V M	126A476S	←
C 1509	ELECTROLYTIC CAP. 47uF/16V M	126C476S	←
C 3201	CERAMIC CAP. Y M 0.01uF/16V	3Y4D103T or	←
	CERAMIC CAP. F Z 0.01uF/16V	1220842T	←
C 3202	ELECTROLYTIC CAP. 47uF/6.3V M	126A476S	←
C 3203	CERAMIC CAP. F Z 0.022uF/25V	122Z122T or	←
	CERAMIC CAP. F Z 0.022uF/25V	1220843T	←
C 3205	ELECTROLYTIC CAP. 1uF/50V M	126F105S	←
C 3206	ELECTROLYTIC CAP. 0.1uF/50V M	126F104S	←
C 3207	ELECTROLYTIC CAP. 1uF/50V M	126F105S	←
C 3208	SEMICONDUCTOR CAP. SR K 0.022uF/25V	12Y2223S	←
C 3209	ELECTROLYTIC CAP. 1uF/50V M	126F105S	←
C 3210	ELECTROLYTIC CAP. 1000uF/6.3V M	126A108S	←
C 3211	ELECTROLYTIC CAP. 47uF/16V M	126C476S	←
C 3212	CERAMIC CAP. Y M 0.01uF/16V	3Y4D103T or	←
	CERAMIC CAP. F Z 0.01uF/16V	1220842T	←
C 3214	CERAMIC CAP. F Z 0.022uF/25V	122Z122T or	←
	CERAMIC CAP. F Z 0.022uF/25V	1220843T	←
C 3215	CERAMIC CAP. B J 220PF/50V	3B41221T	←
C 3217	CERAMIC CAP. SL J 56PF/50V	3S41560T	←
C 3218	CERAMIC CAP. F Z 0.022uF/25V	122Z122T or	←
	CERAMIC CAP. F Z 0.022uF/25V	1220843T	←
C 3219	SEMICONDUCTOR CAP. SR K 0.01uF/25V	12Y2103S	←
C 3220	CERAMIC CAP. Y M 0.01uF/16V	3Y4D103T or	←
	CERAMIC CAP. F Z 0.01uF/16V	1220842T	←
C 3221	ELECTROLYTIC CAP. 1uF/50V M	126F105S	←
C 3222	ELECTROLYTIC CAP. 10uF/16V M	126C106S	←
C 3223	ELECTROLYTIC CAP. 10uF/16V M	126C106S	←
C 3224	CERAMIC CAP. B J 150PF/50V	3B41151T	←
C 3225	ELECTROLYTIC CAP. 47uF/6.3V M	126A476S	←
C 3226	ELECTROLYTIC CAP. 1uF/50V M	126F105S	←
C 3227	CERAMIC CAP. SL J 33PF/50V	3S41330T	←
C 3230	CERAMIC CAP. B J 180PF/50V	3B41181T	←
C 3231	CERAMIC CAP. SL J 33PF/50V	3S41330T	←
C 3232	CERAMIC CAP. SL J 47PF/50V	3S41470T	←
C 3233	CERAMIC CAP. SL J 47PF/50V	3S41470T	←
C 3234	CERAMIC CAP. B J 82PF/50V	3B41820T	←
C 3235	CERAMIC CAP. SL D 6PF/50V	3270609S	←
C 3237	CERAMIC CAP. SL J 39PF/50V	3S41390T	←
C 3238	ELECTROLYTIC CAP. 47uF/16V M	126C476S	←
C 3239	CERAMIC CAP. F Z 0.022uF/25V	122Z122T or	←
	CERAMIC CAP. F Z 0.022uF/25V	1220843T	←

Ref. No.	Description	Part No. VIP-3000HCMKIII	Part No. VIP-3000AMKIII
C 3240	ELECTROLYTIC CAP. 1uF/50V M	126F105S	←
C 3241	CERAMIC CAP. B J 220PF/50V	3B41221T	←
C 3242	CERAMIC CAP. Y M 0.01uF/16V	3Y4D103T or	←
	CERAMIC CAP. F Z 0.01uF/16V	1220842T	←
C 3244	CERAMIC CAP. Y M 0.01uF/16V	3Y4D103T or	←
	CERAMIC CAP. F Z 0.01uF/16V	1220842T	←
C 3245	CERAMIC CAP. Y M 0.01uF/16V	3Y4D103T or	←
	CERAMIC CAP. F Z 0.01uF/16V	1220842T	←
C 3246	CERAMIC CAP. Y M 0.01uF/16V	3Y4D103T or	←
	CERAMIC CAP. F Z 0.01uF/16V	1220842T	←
C 3247	CERAMIC CAP. SL J 22PF/50V	3S41220T	←
C 3248	ELECTROLYTIC CAP. 4.7uF/50V M	126F475S	←
C 3249	CERAMIC CAP. B J 220PF/50V	3B41221T	←
C 3250	ELECTROLYTIC CAP. 1uF/50V M	126F105S	←
C 3251	CERAMIC CAP. Y M 0.01uF/16V	3Y4D103T or	←
	CERAMIC CAP. F Z 0.01uF/16V	1220842T	←
C 3259	ELECTROLYTIC CAP. 47uF/16V M	126C476	←
C 6501	CERAMIC CAP. Y M 0.01uF/16V	3Y4D103T or	←
	CERAMIC CAP. F Z 0.01uF/16V	1220842T	←
C 6502	ELECTROLYTIC CAP. 47uF/6.3V M	126A476S	←
C 6503	CERAMIC CAP. F Z 0.022uF/25V	122Z122T or	←
	CERAMIC CAP. F Z 0.022uF/25V	1220843T	←
C 6504	CERAMIC CAP. F Z 0.1uF/25V	1220520S	←
C 6505	CERAMIC CAP. Y M 0.01uF/16V	3Y4D103T or	←
	CERAMIC CAP. F Z 0.01uF/16V	1220842T	←
C 6506	CERAMIC CAP. Y M 0.01uF/16V	3Y4D103T or	←
	CERAMIC CAP. F Z 0.01uF/16V	1220842T	←
	COILS		
L 3201	INDUCTOR 15uH-K-26T	LLAXKATTU150 or	←
	INDUCTOR 15uH-K-26T	LLAXKDTKA150	←
L 3202	INDUCTOR 330uH-K-26T	LLAXKDTKA331	←
L 3203	INDUCTOR 330uH-K-26T	LLAXKDTKA331	←
L 3204	INDUCTOR 10uH-K-26T	LLAXKATTU100 or	←
	INDUCTOR 10uH-K-26T	LLAXKDTKA100	←
L 3205	INDUCTOR 27uH-K-26T	LLAXKATTU270 or	←
	INDUCTOR 27uH-K-26T	LLAXKDTKA270	←
L 3207	INDUCTOR 100uH-K-26T	LLAXKATTU101 or	←
	INDUCTOR 100uH-K-26T	LLAXKDTKA101	←
L 3208	INDUCTOR 47uH-K-26T	LLAXKATTU470 or	←
	INDUCTOR 47uH-K-26T	LLAXKDTKA470	←
L 3209	INDUCTOR 39uH-K-26T	LLAXKATTU390 or	←
	INDUCTOR 39uH-K-26T	LLAXKDTKA390	←
L 6501	INDUCTOR 100uH-K-26T	LLAXKATTU101 or	←
	INDUCTOR 100uH-K-26T	LLAXKDTKA101	←
	SEMICONDUCTORS		
D 1501	DIODE 1N4003	1N4003F2	←
D 1502	DIODE 1N4003	1N4003F2	←
D 1503	DIODE 1N4003	1N4003F2	←
D 1504	DIODE 1N4003	1N4003F2	←
D 1506	DIODE 1SS254	A1SS254T77** or	←
	DIODE GMB01B	GMB01BT	←
D 1507	DIODE 1SS254	A1SS254T77** or	←
	DIODE GMB01B	GMB01BT	←
D 3205	DIODE 1SS254	A1SS254T77** or	←
	DIODE GMB01B	GMB01BT	←
D 4001	DIODE 1SS254	A1SS254T77** or	←
	DIODE GMB01B	GMB01BT	←
D 6501	DIODE 1SS254	A1SS254T77** or	←
	DIODE GMB01B	GMB01BT	←

Ref. No.	Description	Part No. VIP-3000HCMKIII	Part No. VIP-3000AMKIII
D 6503	DIODE 1SS254	A1SS254T77** or	←
	DIODE GMB01B	GMB01BT	←
IC1501 ⚠	VOLTAGE REGULATOR IC BA17812T	GBA17812T000 or	←
	VOLTAGE REGULATOR IC AN7812F	AN7812F or	←
	IC REGULATOR NJM7812FA	14L0251	←
IC1502 ⚠	VOLTAGE REGULATOR IC BA17805T	GBA17805T000 or	←
	VOLTAGE REGULATOR IC AN7805F	AN7805F or	←
	VOLTAGE REGULATOR IC NJM7805FA	J7805FA	←
IC3201	IC VIDEO LA7390	GLA739000000	←
IC3202	IC LC8992	14LQ489	←
IC6501	MICROCONTROLLER 4BIT SY/M50727-562SP	GC91000MB013	←
IC6502	IC MOTOR DRIVER BA6209N	14LF492	←
IC6503	IC RESET MN1280-R	14DN160	←
Q 1504	TRANSISTOR 2SD1384(Q)	D1384QZ or	←
	TRANSISTOR 2SD1384(R)	D1384RZ or	←
	TRANSISTOR 2SD1207(S)	D1207SZ or	←
	TRANSISTOR 2SD1207(T)	D1207TZ	←
Q 1506	TRANSISTOR 2SC1740(R)	C1740RZ or	←
	TRANSISTOR 2SC1740(S)	C1740SZ or	←
	TRANSISTOR 2SC536SP(E)	C536SEZ or	←
	TRANSISTOR 2SC536SP(F)	C536SFZ	←
Q 1508	TRANSISTOR 2SB1010(Q)	B1010QZ or	←
	TRANSISTOR 2SB1010(R)	B1010RZ or	←
	TRANSISTOR 2SB892(S)	B892SZ or	←
	TRANSISTOR 2SB892(T)	B892TZ	←
Q 3201	TRANSISTOR 2SC1740(R)	C1740RZ or	←
	TRANSISTOR 2SC1740(S)	C1740SZ or	←
	TRANSISTOR 2SC536SP(E)	C536SEZ or	←
	TRANSISTOR 2SC536SP(F)	C536SFZ	←
Q 3202	RES. BUILT-IN TRANSISTOR DTA124ES	A124ESZ or	←
	RES. BUILT-IN TRANSISTOR 2SA1346	A1346Z	←
Q 3203	RES. BUILT-IN TRANSISTOR DTA144WS	A144WSZ	←
Q 3204	TRANSISTOR 2SA933(Q)	A933QZ or	←
	TRANSISTOR 2SA933(R)	A933RZ or	←
	TRANSISTOR 2SA608SP(E)	A608SEZ or	←
	TRANSISTOR 2SA608SP(F)	A608SFZ	←
Q 3205	TRANSISTOR 2SC1740(R)	C1740RZ or	←
	TRANSISTOR 2SC1740(S)	C1740SZ or	←
	TRANSISTOR 2SC536SP(E)	C536SEZ or	←
	TRANSISTOR 2SC536SP(F)	C536SFZ	←
Q 3206	TRANSISTOR 2SC1740(R)	C1740RZ or	←
	TRANSISTOR 2SC1740(S)	C1740SZ or	←
	TRANSISTOR 2SC536SP(E)	C536SEZ or	←
	TRANSISTOR 2SC536SP(F)	C536SFZ	←
Q 3207	TRANSISTOR 2SC2058(P)	C2058PZ or	←
	TRANSISTOR 2SC2058(Q)	C2058QZ or	←
	TRANSISTOR 2SC2839(E)	C2839EZ or	←
	TRANSISTOR 2SC2839(F)	C2839FZ	←
Q 3208	TRANSISTOR 2SC1740(R)	C1740RZ or	←
	TRANSISTOR 2SC1740(S)	C1740SZ or	←
	TRANSISTOR 2SC536SP(E)	C536SEZ or	←
	TRANSISTOR 2SC536SP(F)	C536SFZ	←
Q 3209	TRANSISTOR 2SA933(Q)	A933QZ or	←
	TRANSISTOR 2SA933(R)	A933RZ or	←
	TRANSISTOR 2SA608SP(E)	A608SEZ or	←
	TRANSISTOR 2SA608SP(F)	A608SFZ	←

Ref. No.	Description	Part No. VIP-3000HCMKIII	Part No. VIP-3000AMKIII
Q 3210	TRANSISTOR 2SA933(Q)	A933QZ or	←
	TRANSISTOR 2SA933(R)	A933RZ or	←
	TRANSISTOR 2SA608SP(E)	A608SEZ or	←
	TRANSISTOR 2SA608SP(F)	A608SFZ	←
Q 3211	TRANSISTOR 2SA933(Q)	A933QZ or	←
	TRANSISTOR 2SA933(R)	A933RZ or	←
	TRANSISTOR 2SA608SP(E)	A608SEZ or	←
	TRANSISTOR 2SA608SP(F)	A608SFZ	←
Q 3212	TRANSISTOR 2SC1740(R)	C1740RZ or	←
	TRANSISTOR 2SC1740(S)	C1740SZ or	←
	TRANSISTOR 2SC536SP(E)	C536SEZ or	←
	TRANSISTOR 2SC536SP(F)	C536SFZ	←
Q 3215	TRANSISTOR 2SC1740(R)	C1740RZ or	←
	TRANSISTOR 2SC1740(S)	C1740SZ or	←
	TRANSISTOR 2SC536SP(E)	C536SEZ or	←
	TRANSISTOR 2SC536SP(F)	C536SFZ	←
Q 4001	TRANSISTOR 2SD1468(R)	D1468RZ or	←
	TRANSISTOR 2SD1468(S)	D1468SZ or	←
	TRANSISTOR 2SD1012(F)	D1012FZ or	←
	TRANSISTOR 2SD1012(G)	D1012GZ	←
Q 6501	RES. BUILT-IN TRANSISTOR DTA144TS	QDTA144TSTP0	←
Q 6502	RES. BUILT-IN TRANSISTOR DTA144TS	QDTA144TSTP0	←
Q 6503	RES. BUILT-IN TRANSISTOR DTA144TS	QDTA144TSTP0	←
Q 6504	TRANSISTOR 2SC1740(R)	C1740RZ or	←
	TRANSISTOR 2SC1740(S)	C1740SZ or	←
	TRANSISTOR 2SC536SP(E)	C536SEZ or	←
	TRANSISTOR 2SC536SP(F)	C536SFZ	←
	RESISTORS		
R 1503	CARBON RES. 1/5W J 100Kohm	1324104T or	←
	CARBON RES. 1/6W J 100Kohm	132A104T	←
R 1504	CARBON RES. 1/5W J 1.2Kohm	1324122T or	←
	CARBON RES. 1/6W J 1.2Kohm	132A122T	←
R 1505	CARBON RES. 1/5W J 100Kohm	1324104T or	←
	CARBON RES. 1/6W J 100Kohm	132A104T	←
R 1506	CARBON RES. 1/5W J 2.7Kohm	1324272T or	←
	CARBON RES. 1/6W J 2.7Kohm	132A272T	←
R 3201	CARBON RES. 1/5W J 27Kohm	1324273T or	←
	CARBON RES. 1/6W J 27Kohm	132A273T	←
R 3202	CARBON RES. 1/5W J 8.2Kohm	1324822T or	←
	CARBON RES. 1/6W J 8.2Kohm	132A822T	←
R 3203	CARBON RES. 1/5W J 470ohm	1324471T or	←
	CARBON RES. 1/6W J 470ohm	132A471T	←
R 3204	CARBON RES. 1/5W J 22Kohm	1324223T or	←
	CARBON RES. 1/6W J 22Kohm	132A223T	←
R 3205	CARBON RES. 1/5W J 3.9Kohm	1324392T or	←
	CARBON RES. 1/6W J 3.9Kohm	132A392T	←
R 3206	CARBON RES. 1/5W J 1Kohm	1324102T or	←
	CARBON RES. 1/6W J 1Kohm	132A102T	←
R 3208	CARBON RES. 1/5W J 10Kohm	1324103T or	←
	CARBON RES. 1/6W J 10Kohm	132A103T	←
R 3209	CARBON RES. 1/5W J 2.7Kohm	1324272T or	←
	CARBON RES. 1/6W J 2.7Kohm	132A272T	←
R 3210	CARBON RES. 1/5W J 1Kohm	1324102T or	←
	CARBON RES. 1/6W J 1Kohm	132A102T	←
R 3211	CARBON RES. 1/5W J 1.2Kohm	1324122T or	←
	CARBON RES. 1/6W J 1.2Kohm	132A122T	←
R 3212	CARBON RES. 1/5W J 270ohm	1324271T or	←
	CARBON RES. 1/6W J 270ohm	132A271T	←

Ref. No.	Description	Part No. VIP-3000HCMKIII	Part No. VIP-3000AMKIII
R 3213	CARBON RES. 1/5W J 10Kohm	1324103T or	←
	CARBON RES. 1/6W J 10Kohm	132A103T	←
R 3214	CARBON RES. 1/5W J 390ohm	1324391T or	←
	CARBON RES. 1/6W J 390ohm	132A391T	←
R 3215	CARBON RES. 1/5W J 330ohm	1324331T or	←
	CARBON RES. 1/6W J 330ohm	132A331T	←
R 3216	CARBON RES. 1/5W J 3.3Kohm	1324332T or	←
	CARBON RES. 1/6W J 3.3Kohm	132A332T	←
R 3217	CARBON RES. 1/5W J 8.2Kohm	1324822T or	←
	CARBON RES. 1/6W J 8.2Kohm	132A822T	←
R 3218	CARBON RES. 1/5W J 4.7Kohm	1324472T or	←
	CARBON RES. 1/6W J 4.7Kohm	132A472T	←
R 3219	CARBON RES. 1/5W J 1Mohm	1324105T or	←
	CARBON RES. 1/6W J 1Mohm	132A105T	←
R 3220	CARBON RES. 1/5W J 2.2Kohm	1324222T or	←
	CARBON RES. 1/6W J 2.2Kohm	132A222T	←
R 3221	CARBON RES. 1/5W J 2.2Kohm	1324222T or	←
	CARBON RES. 1/6W J 2.2Kohm	132A222T	←
R 3222	CARBON RES. 1/5W J 2.7Kohm	1324272T or	←
	CARBON RES. 1/6W J 2.7Kohm	132A272T	←
R 3223	CARBON RES. 1/5W J 22Kohm	1324223T or	←
	CARBON RES. 1/6W J 22Kohm	132A223T	←
R 3224	CARBON RES. 1/5W J 2.2Kohm	1324222T or	←
	CARBON RES. 1/6W J 2.2Kohm	132A222T	←
R 3225	CARBON RES. 1/5W J 10Kohm	1324103T or	←
	CARBON RES. 1/6W J 10Kohm	132A103T	←
R 3226	CARBON RES. 1/5W J 1.5Kohm	1324152T or	←
	CARBON RES. 1/6W J 1.5Kohm	132A152T	←
R 3227	CARBON RES. 1/5W J 1.8Kohm	1324182T or	←
	CARBON RES. 1/6W J 1.8Kohm	132A182T	←
R 3228	CARBON RES. 1/5W J 12Kohm	1324123T or	←
	CARBON RES. 1/6W J 12Kohm	132A123T	←
R 3229	CARBON RES. 1/5W J 4.7Kohm	1324472T or	←
	CARBON RES. 1/6W J 4.7Kohm	132A472T	←
R 3230	CARBON RES. 1/5W J 2.7Kohm	1324272T or	←
	CARBON RES. 1/6W J 2.7Kohm	132A272T	←
R 3231	CARBON RES. 1/5W J 1Kohm	1324102T or	←
	CARBON RES. 1/6W J 1Kohm	132A102T	←
R 3232	CARBON RES. 1/5W J 2.7Kohm	1324272T or	←
	CARBON RES. 1/6W J 2.7Kohm	132A272T	←
R 3233	CARBON RES. 1/5W J 1Kohm	1324102T or	←
	CARBON RES. 1/6W J 1Kohm	132A102T	←
R 3234	CARBON RES. 1/5W J 1Kohm	1324102T or	←
	CARBON RES. 1/6W J 1Kohm	132A102T	←
R 3235	CARBON RES. 1/5W J 1Kohm	1324102T or	←
	CARBON RES. 1/6W J 1Kohm	132A102T	←
R 3236	CARBON RES. 1/5W J 10Kohm	1324103T or	←
	CARBON RES. 1/6W J 10Kohm	132A103T	←
R 3237	CARBON RES. 1/5W J 18Kohm	1324183T or	←
	CARBON RES. 1/6W J 18Kohm	132A183T	←
R 3238	CARBON RES. 1/5W J 22Kohm	1324223T or	←
	CARBON RES. 1/6W J 22Kohm	132A223T	←
R 3239	CARBON RES. 1/5W J 1Kohm	1324102T or	←
	CARBON RES. 1/6W J 1Kohm	132A102T	←
R 3245	CARBON RES. 1/5W J 22Kohm	1324223T or	←
	CARBON RES. 1/6W J 22Kohm	132A223T	←
R 3246	CARBON RES. 1/5W J 680ohm	1324681T	←
R 3247	CARBON RES. 1/5W J 680ohm	1324681T	←

Ref. No.	Description	Part No. VIP-3000HCMKIII	Part No. VIP-3000AMKIII
R 3248	CARBON RES. 1/5W J 2.2Kohm	1324222T or	←
	CARBON RES. 1/6W J 2.2Kohm	132A222T	←
R 3255	CARBON RES. 1/5W J 1Kohm	1324102T or	←
	CARBON RES. 1/6W J 1Kohm	132A102T	←
R 3270	CARBON RES. 1/5W J 4.7Kohm	1324472T or	←
	CARBON RES. 1/6W J 4.7Kohm	132A472T	←
R 6501	CARBON RES. 1/5W J 47Kohm	1324473T or	←
	CARBON RES. 1/6W J 47Kohm	132A473T	←
R 6502	METAL RES. 1W J 3.3ohm	1330320 or	←
	METAL RES. 1W J 3.3ohm	1330395	←
R 6503	CARBON RES. 1/5W J 1Mohm	1324105T or	←
	CARBON RES. 1/6W J 1Mohm	132A105T	←
R 6504	CARBON RES. 1/5W J 3.3Kohm	1324332T or	←
	CARBON RES. 1/6W J 3.3Kohm	132A332T	←
R 6505	CARBON RES. 1/5W J 3.3Kohm	1324332T or	←
	CARBON RES. 1/6W J 3.3Kohm	132A332T	←
R 6506	CARBON RES. 1/5W J 47Kohm	1324473T or	←
	CARBON RES. 1/6W J 47Kohm	132A473T	←
R 6507	CARBON RES. 1/5W J 1.2Kohm	1324122T or	←
	CARBON RES. 1/6W J 1.2Kohm	132A122T	←
R 6508	CARBON RES. 1/5W J 82Kohm	1324823T or	←
	CARBON RES. 1/6W J 82Kohm	132A823T	←
R 6509	CARBON RES. 1/5W J 4.7Kohm	1324472T or	←
	CARBON RES. 1/6W J 4.7Kohm	132A472T	←
R 6514	CARBON RES. 1/5W J 470Kohm	1324474T or	←
	CARBON RES. 1/6W J 470Kohm	132A474T	←
R 6515	CARBON RES. 1/5W J 470Kohm	1324474T or	←
	CARBON RES. 1/6W J 470Kohm	132A474T	←
R 6516	CARBON RES. 1/5W J 47Kohm	1324473T or	←
	CARBON RES. 1/6W J 47Kohm	132A473T	←
R 6517	CARBON RES. 1/5W J 47Kohm	1324473T or	←
	CARBON RES. 1/6W J 47Kohm	132A473T	←
R 6521	CARBON RES. 1/5W J 47Kohm	1324473T or	←
	CARBON RES. 1/6W J 47Kohm	132A473T	←
R 6522	CARBON RES. 1/5W J 4.7Kohm	1324472T or	←
	CARBON RES. 1/6W J 4.7Kohm	132A472T	←
R 6523	CARBON RES. 1/5W J 4.7Kohm	1324472T or	←
	CARBON RES. 1/6W J 4.7Kohm	132A472T	←
R 6524	CARBON RES. 1/5W J 4.7Kohm	1324472T or	←
	CARBON RES. 1/6W J 4.7Kohm	132A472T	←
R 6525	CARBON RES. 1/5W J 4.7Kohm	1324472T or	←
	CARBON RES. 1/6W J 4.7Kohm	132A472T	←
R 6526	CARBON RES. 1/5W J 47Kohm	1324473T or	←
	CARBON RES. 1/6W J 47Kohm	132A473T	←
R 6527	CARBON RES. 1/5W J 47Kohm	1324473T or	←
	CARBON RES. 1/6W J 47Kohm	132A473T	←
R 6528	CARBON RES. 1/5W J 47Kohm	1324473T or	←
	CARBON RES. 1/6W J 47Kohm	132A473T	←
R 6529	CARBON RES. 1/5W J 47Kohm	1324473T or	←
	CARBON RES. 1/6W J 47Kohm	132A473T	←
R 6530	CARBON RES. 1/5W J 4.7Kohm	1324472T or	←
	CARBON RES. 1/6W J 4.7Kohm	132A472T	←
R 6531	CARBON RES. 1/5W J 2.2Kohm	1324222T or	←
	CARBON RES. 1/6W J 2.2Kohm	132A222T	←
R 6533	CARBON RES. 1/5W J 3.3Kohm	1324332T or	←
	CARBON RES. 1/6W J 3.3Kohm	132A332T	←
R 6534	CARBON RES. 1/5W J 47Kohm	1324473T or	←
	CARBON RES. 1/6W J 47Kohm	132A473T	←

Ref. No.	Description	Part No. VIP-3000HCMKIII	Part No. VIP-3000AMKIII
R 6535	CARBON RES. 1/5W J 47Kohm	1324473T or	←
	CARBON RES. 1/6W J 47Kohm	132A473T	←
R 6536	CARBON RES. 1/5W J 2.2Kohm	1324222T or	←
	CARBON RES. 1/6W J 2.2Kohm	132A222T	←
R 6540	CARBON RES. 1/5W J 4.7Kohm	1324472T or	←
	CARBON RES. 1/6W J 4.7Kohm	132A472T	←
R 7002	CARBON RES. 1/5W J 160ohm	1324161T or	←
	CARBON RES. 1/6W J 160ohm	132A161T	←
R 7003	CARBON RES. 1/5W J 150ohm	1324151T or	←
	CARBON RES. 1/6W J 150ohm	132A151T	←
R 7501	CARBON RES. 1/5W J 82ohm	1324820T or	←
	CARBON RES. 1/6W J 82ohm	132A820T	←
	MSCELLANEOUS		
2B 4	HEATSINK	0VM402971	←
2L 033	SCREW TAPPING BIND HEAD M3X10	DBM13100	←
2L 034	SCREW TAPPING BIND HEAD M3X10	DBM13100	←
2L 035	SCREW TAPPING BIND HEAD M3X10	DBM13100	←
2L 041	SCREW S-TIGHT 3X4 BIND+	GBMS3040	←
A 5	JACK BOARD	0VM200902	0VM200997
AC1501 ⚠	AC COAD ASS'Y	WX1K6050-008	←
CN6501	CONNECTOR BASE 13P TMC-X13P-A1	JCTMJ13TGH0F	←
CN6502	CONNECTOR BASE 13P TMC-X13P-A1	JCTMJ13TGH0F	←
CN6503	CONNECTOR BASE 18P TRC-X18P-A1	JCTRJ18TGH0C	←
DL3201	COMB FILTER 4.433619MHz	1813522 or	←
	COMB FILTER 4.433619MHz	1813274	←
F 1501 ⚠	FUSE T200MA/250V	1790474	←
JK7501	RCA JACK(YELLOW/WHITE) JPJ8011-01-340	JXRL030HD002	←
RF7001	RF CONVERTOR MDLK6E303A	1813510 or	1813266
	RF CONVERTOR MDF33UD3642 R55 2302	URFCPLSMM003	←
SW3201	SLIDE SWITCH 1C-2P 01-326-050	SSS0102MJ011 or	←
	SLIDE SWITCH 1C-2P SLG-12-466G3	SSS0102KB011	←
T 1501 ⚠	POWER TRANS 220V 50Hz	LTT57EPSA028 or	←
	POWER TRANS 220V 50Hz	LTT54EPSB001	←
TP7501	TEST PIN RT-08T-1.3BT	1770482	←
X 3201	X'TAL 4.433619MHz	1811366 or	←
	X'TAL 4.433619MHz	1811388	←
X 6501	CERAMIC RESONATOR 4MHz	1811305	←
	CONNECTOR ASS'Y 7P DECK-MAIN	WX1K6050-007	←
	HEAT SINK ASS'Y	0VSA04113 or	←
	FUSE HOLDER PFC5000-0202	XH01Z00SR001	←
⚠	P.C.B.	BK6050F01001	←

MCV-B PCB ASSEMBLY

Ref. No.	Description	Part No. VIP-3000HC MKIII	Part No. VIP-3000AMKIII
	ASSEMBLY MCV-B PCB CONSISTS OF THE FOLLOWING:	0VSA04108-B	←
	CAPACITORS		
C 2001	MYLAR CAP. 0.033uF/50V J	1254333S	←
C 2003	CERAMIC CAP. B J 0.001uF/50V	3B41102T	←
C 2004	SEMICONDUCTOR CAP. SR K 0.01uF/25V	12Y2103S	←
C 2005	ELECTROLYTIC CAP. 100uF/6.3V M	126A107S	←
C 2006	SEMICONDUCTOR CAP. SR K 0.001uF/25V	12Y2102S	←
C 2008	ELECTROLYTIC CAP. 0.22uF/50V M	126F224S	←
C 2009	SEMICONDUCTOR CAP. SR K 0.01uF/25V	12Y2103S	←
C 2010	ELECTROLYTIC CAP. 100uF/6.3V M	126A107S	←
C 2011	CERAMIC CAP. Y M 0.01uF/16V	3Y4D103T or	←
	CERAMIC CAP. F Z 0.01uF/16V	1220842T	←
C 2012	MYLAR CAP. 0.15uF/50V J	1254154S	←

Ref. No.	Description	Part No. VIP-3000HC MKIII	Part No. VIP-3000AMKIII
C 2015	ELECTROLYTIC CAP. 10uF/16V M	126C106S	←
C 2016	ELECTROLYTIC CAP. 0.22uF/50V M	126F224S	←
C 2017	ELECTROLYTIC CAP. 1uF/50V M	126F105S	←
C 2018	ELECTROLYTIC CAP. 10uF/16V M H7	526T106S	←
C 2019	CERAMIC CAP. Y M 0.01uF/16V	3Y4D103T or	←
	CERAMIC CAP. F Z 0.01uF/16V	1220842T	←
C 2020	CERAMIC CAP. Y M 0.01uF/16V	3Y4D103T or	←
	CERAMIC CAP. F Z 0.01uF/16V	1220842T	←
C 2022	ELECTROLYTIC CAP. 1uF/50V M	126F105S	←
C 2023	ELECTROLYTIC CAP. 10uF/16V M	126C106S	←
C 2024	ELECTROLYTIC CAP. 1uF/50V M	126F105S	←
C 2025	ELECTROLYTIC CAP. 10uF/16V M	126C106S	←
C 2026	ELECTROLYTIC CAP. 10uF/16V M	126C106S	←
C 2027	ELECTROLYTIC CAP. 10uF/16V M H7	526T106S	←
C 2028	SEMICONDUCTOR CAP. SR K 0.01uF/25V	12Y2103S	←
C 2029	ELECTROLYTIC CAP. 47uF/6.3V M	126A476S	←
C 2036	CERAMIC CAP. Y M 0.01uF/16V	3Y4D103T or	←
	CERAMIC CAP. F Z 0.01uF/16V	1220842T	←
C 2037	CERAMIC CAP. Y M 0.01uF/16V	3Y4D103T or	←
	CERAMIC CAP. F Z 0.01uF/16V	1220842T	←
C 2038	CERAMIC CAP. Y M 0.01uF/16V	3Y4D103T or	←
	CERAMIC CAP. F Z 0.01uF/16V	1220842T	←
C 2039	CERAMIC CAP. Y M 0.01uF/16V	3Y4D103T or	←
	CERAMIC CAP. F Z 0.01uF/16V	1220842T	←
C 2040	ELECTROLYTIC CAP. 10uF/16V M	126C106S	←
C 2045	CERAMIC CAP. F Z 0.047uF/16V	122Z791T or	←
	CERAMIC CAP. F Z 0.047uF/25V	3F45473T	←
C 3501	CERAMIC CAP. F Z 0.1uF/50V	3F40104T	←
C 3502	CERAMIC CAP. F Z 0.1uF/50V	3F40104T	←
C 3503	ELECTROLYTIC CAP. 0.22uF/50V M H7	526W224S	←
C 3504	CERAMIC CAP. SL J 22PF/50V	3S41220T	←
C 3505	CERAMIC CAP. SL J 22PF/50V	3S41220T	←
C 3508	CERAMIC CAP. SL J 22PF/50V	3S41220T	←
C 3509	CERAMIC CAP. SL J 33PF/50V	3S41330T	←
C 3510	CERAMIC CAP. B J 470PF/50V	3B41471T	←
C 3512	ELECTROLYTIC CAP. 47uF/6.3V M H7	526R476S	←
C 3513	CERAMIC CAP. Y M 0.01uF/16V	3Y4D103T or	←
	CERAMIC CAP. F Z 0.01uF/16V	1220842T	←
C 3514	CERAMIC CAP. F Z 0.022uF/25V	122Z122T or	←
	CERAMIC CAP. F Z 0.022uF/25V	1220843T	←
C 4001	SEMICONDUCTOR CAP. SR K 0.0015uF/25V	12Y2152S	←
C 4002	ELECTROLYTIC CAP. 10uF/16V M H7	526T106S	←
C 4003	CERAMIC CAP. SL J 100PF/50V	1270101S	←
C 4004	MYLAR CAP. 0.033uF/50V J	1254333S	←
C 4005	ELECTROLYTIC CAP. 10uF/16V M H7	526T106S	←
C 4006	ELECTROLYTIC CAP. 100uF/16V M	126C107S	←
C 4007	ELECTROLYTIC CAP. 4.7uF/25V M	126D475S	←
C 4008	CERAMIC CAP. SL J 100PF/50V	1270101S	←
C 4009	ELECTROLYTIC CAP. 33uF/6.3V M	126A336S	←
C 4010	SEMICONDUCTOR CAP. SR K 0.1uF/25V	12Y2104S	←
	COILS		
L 3501	INDUCTOR 18uH-K-26T	LLAXKATTU180 or	←
	INDUCTOR 18uH-K-26T	LLAXKDTKA180	←
L 3503	INDUCTOR 33uH-K-26T	LLAXKATTU330 or	←
	INDUCTOR 33uH-K-26T	LLAXKDTKA330	←
L 3504	INDUCTOR 22uH-K-26T	LLAXKATTU220 or	←
	INDUCTOR 22uH-K-26T	LLAXKDTKA220	←
L 3505	INDUCTOR 150uH-K-26T	LLAXKATTU151 or	←
	INDUCTOR 150uH-K-26T	LLAXKDTKA151	←

Ref. No.	Description	Part No. VIP-3000HC MKIII	Part No. VIP-3000AMKIII
L 3506	INDUCTOR 100uH-K-26T	LLAXKATTU101 or	←
	INDUCTOR 100uH-K-26T	LLAXKDTKA101	←
L 3507	INDUCTOR 100uH-K-26T	LLAXKATTU101 or	←
	INDUCTOR 100uH-K-26T	LLAXKDTKA101	←
	SEMICONDUCTORS		
D 2001	DIODE 1SS254	A1SS254T77** or	←
	DIODE GMB01B	GMB01BT	←
D 2002	DIODE 1SS254	A1SS254T77** or	←
	DIODE GMB01B	GMB01BT	←
D 2005	DIODE 1SS254	A1SS254T77** or	←
	DIODE GMB01B	GMB01BT	←
D 2006	DIODE 1SS254	A1SS254T77** or	←
	DIODE GMB01B	GMB01BT	←
D 2007	DIODE 1SS254	A1SS254T77** or	←
	DIODE GMB01B	GMB01BT	←
IC2001	IC SERVO BU2845S	GC90000RM013	←
IC2002	IC (OP-AMP.) BA10324	14LF554	←
IC2003	VOLTAGE REGULATOR IC AN78L05	AN78L05 or	←
	VOLTAGE REGULATOR IC NJM78L05A	J78L05A	←
IC3501	IC LA7370	GLA7370*****	←
IC4001	IC BA328LN	BA328LN	←
Q 2001	RES. BUILT-IN TRANSISTOR DTA124ES	A124ESZ or	←
	RES. BUILT-IN TRANSISTOR 2SA1346	A1346Z	←
Q 2002	RES. BUILT-IN TRANSISTOR DTA124ES	A124ESZ or	←
	RES. BUILT-IN TRANSISTOR 2SA1346	A1346Z	←
Q 2003	RES. BUILT-IN TRANSISTOR DTC124ES	C124ESZ or	←
	RES. BUILT-IN TRANSISTOR 2SC3400	C3400Z	←
Q 2004	RES. BUILT-IN TRANSISTOR DTC124ES	C124ESZ or	←
	RES. BUILT-IN TRANSISTOR 2SC3400	C3400Z	←
Q 3502	TRANSISTOR 2SC2058(P)	C2058PZ or	←
	TRANSISTOR 2SC2058(Q)	C2058QZ or	←
	TRANSISTOR 2SC2839(E)	C2839EZ or	←
	TRANSISTOR 2SC2839(F)	C2839FZ	←
Q 3503	TRANSISTOR 2SC1740(Q)	C1740QZ or	←
	TRANSISTOR 2SC1740(R)	C1740RZ or	←
	TRANSISTOR 2SC536SP(E)	C536SEZ or	←
	TRANSISTOR 2SC536SP(F)	C536SFZ	←
	RESISTORS		
R 2001	CARBON RES. 1/5W J 110Kohm	1324114T or	←
	CARBON RES. 1/6W J 110Kohm	132A114T	←
R 2002	CARBON RES. 1/5W J 150ohm	1324151T or	←
	CARBON RES. 1/6W J 150ohm	132A151T	←
R 2004	CARBON RES. 1/5W J 56Kohm	1324563T or	←
	CARBON RES. 1/6W J 56Kohm	132A563T	←
R 2005	CARBON RES. 1/5W J 47Kohm	1324473T or	←
	CARBON RES. 1/6W J 47Kohm	132A473T	←
R 2006	CARBON RES. 1/5W J 56Kohm	1324563T or	←
	CARBON RES. 1/6W J 56Kohm	132A563T	←
R 2007	CARBON RES. 1/5W J 56Kohm	1324563T or	←
	CARBON RES. 1/6W J 56Kohm	132A563T	←
R 2008	CARBON RES. 1/5W J 39Kohm	1324393T or	←
	CARBON RES. 1/6W J 39Kohm	132A393T	←
R 2009	CARBON RES. 1/5W J 180Kohm	1324184T or	←
	CARBON RES. 1/6W J 180Kohm	132A184T	←
R 2010	CARBON RES. 1/5W J 5.6Kohm	1324562T or	←
	CARBON RES. 1/6W J 5.6Kohm	132A562T	←
R 2012	CARBON RES. 1/5W J 56Kohm	1324563T or	←
	CARBON RES. 1/6W J 56Kohm	132A563T	←

Ref. No.	Description	Part No. VIP-3000HC MKIII	Part No. VIP-3000AMKIII
R 2013	CARBON RES. 1/5W J 10Kohm	1324103T or	←
	CARBON RES. 1/6W J 10Kohm	132A103T	←
R 2014	CARBON RES. 1/5W J 56Kohm	1324563T or	←
	CARBON RES. 1/6W J 56Kohm	132A563T	←
R 2015	CARBON RES. 1/5W J 2.7Kohm	1324272T or	←
	CARBON RES. 1/6W J 2.7Kohm	132A272T	←
R 2016	CARBON RES. 1/5W J 1Kohm	1324102T or	←
	CARBON RES. 1/6W J 1Kohm	132A102T	←
R 2017	CARBON RES. 1/5W J 150Kohm	1324154T or	←
	CARBON RES. 1/6W J 150Kohm	132A154T	←
R 2018	CARBON RES. 1/5W J 39Kohm	1324393T or	←
	CARBON RES. 1/6W J 39Kohm	132A393T	←
R 2019	CARBON RES. 1/5W J 22Kohm	1324223T or	←
	CARBON RES. 1/6W J 22Kohm	132A223T	←
R 2020	CARBON RES. 1/5W J 4.7Kohm	1324472T or	←
	CARBON RES. 1/6W J 4.7Kohm	132A472T	←
R 2022	CARBON RES. 1/5W J 10Kohm	1324103T or	←
	CARBON RES. 1/6W J 10Kohm	132A103T	←
R 2023	CARBON RES. 1/5W J 2.2Kohm	1324222T or	←
	CARBON RES. 1/6W J 2.2Kohm	132A222T	←
R 2024	CARBON RES. 1/5W J 2.7Kohm	1324272T or	←
	CARBON RES. 1/6W J 2.7Kohm	132A272T	←
R 2025	CARBON RES. 1/5W J 100ohm	1324101T or	←
	CARBON RES. 1/6W J 100ohm	132A101T	←
R 2026	CARBON RES. 1/5W J 100ohm	1324101T or	←
	CARBON RES. 1/6W J 100ohm	132A101T	←
R 2028	CARBON RES. 1/5W J 2.2Kohm	1324222T or	←
	CARBON RES. 1/6W J 2.2Kohm	132A222T	←
R 2029	CARBON RES. 1/5W J 2.2Kohm	1324222T or	←
	CARBON RES. 1/6W J 2.2Kohm	132A222T	←
R 2032	CARBON RES. 1/5W J 47Kohm	1324473T or	←
	CARBON RES. 1/6W J 47Kohm	132A473T	←
R 2033	CARBON RES. 1/5W J 47Kohm	1324473T or	←
	CARBON RES. 1/6W J 47Kohm	132A473T	←
R 2035	CARBON RES. 1/5W J 150Kohm	1324154T or	←
	CARBON RES. 1/6W J 150Kohm	132A154T	←
R 2040	CARBON RES. 1/5W J 33Kohm	1324333T or	←
	CARBON RES. 1/6W J 33Kohm	132A333T	←
R 2041	CARBON RES. 1/5W J 22Kohm	1324223T or	←
	CARBON RES. 1/6W J 22Kohm	132A223T	←
R 2042	CARBON RES. 1/5W J 22Kohm	1324223T or	←
	CARBON RES. 1/6W J 22Kohm	132A223T	←
R 2046	CARBON RES. 1/5W J 56Kohm	1324563T or	←
	CARBON RES. 1/6W J 56Kohm	132A563T	←
R 2049	CARBON RES. 1/2W J 12ohm	1322120	←
R 2051	CARBON RES. 1/5W J 2.2Kohm	1324222T or	←
	CARBON RES. 1/6W J 2.2Kohm	132A222T	←
R 2052	CARBON RES. 1/5W J 22Kohm	1324223T or	←
	CARBON RES. 1/6W J 22Kohm	132A223T	←
R 2055	CARBON RES. 1/5W J 56Kohm	1324563T or	←
	CARBON RES. 1/6W J 56Kohm	132A563T	←
R 2059	CARBON RES. 1/5W J 4.7Kohm	1324472T or	←
	CARBON RES. 1/6W J 4.7Kohm	132A472T	←
R 3501	CARBON RES. 1/5W J 1.8Kohm	1324182T or	←
	CARBON RES. 1/6W J 1.8Kohm	132A182T	←
R 3503	CARBON RES. 1/5W J 2.2Kohm	1324222T or	←
	CARBON RES. 1/6W J 2.2Kohm	132A222T	←
R 3504	CARBON RES. 1/5W J 330ohm	1324331T or	←
	CARBON RES. 1/6W J 330ohm	132A331T	←

Ref. No.	Description	Part No. VIP-3000HC MKIII	Part No. VIP-3000AMKIII
R 3508	CARBON RES. 1/5W J 10Kohm	1324103T or	←
	CARBON RES. 1/6W J 10Kohm	132A103T	←
R 3509	CARBON RES. 1/5W J 22Kohm	1324223T or	←
	CARBON RES. 1/6W J 22Kohm	132A223T	←
R 3510	CARBON RES. 1/5W J 1Kohm	1324102T or	←
	CARBON RES. 1/6W J 1Kohm	132A102T	←
R 3511	CARBON RES. 1/5W J 2.2Kohm	1324222T or	←
	CARBON RES. 1/6W J 2.2Kohm	132A222T	←
R 3512	CARBON RES. 1/5W J 3.9Kohm	1324392T or	←
	CARBON RES. 1/6W J 3.9Kohm	132A392T	←
R 4002	CARBON RES. 1/5W J 100ohm	1324101T or	←
	CARBON RES. 1/6W J 100ohm	132A101T	←
R 4003	CARBON RES. 1/5W J 100Kohm	1324104T or	←
	CARBON RES. 1/6W J 100Kohm	132A104T	←
R 4004	CARBON RES. 1/5W J 3.9Kohm	1324392T or	←
	CARBON RES. 1/6W J 3.9Kohm	132A392T	←
R 4005	CARBON RES. 1/5W J 1Kohm	1324102T or	←
	CARBON RES. 1/6W J 1Kohm	132A102T	←
R 4006	CARBON RES. 1/5W J 330ohm	1324331T or	←
	CARBON RES. 1/6W J 330ohm	132A331T	←
R 4007	CARBON RES. 1/5W J 4.7Kohm	1324472T or	←
	CARBON RES. 1/6W J 4.7Kohm	132A472T	←
R 4008	CARBON RES. 1/5W J 150Kohm	1324154T or	←
	CARBON RES. 1/6W J 150Kohm	132A154T	←
R 4009	CARBON RES. 1/5W J 2.7Kohm	1324272T or	←
	CARBON RES. 1/6W J 2.7Kohm	132A272T	←
VR2001	P.O.T. 100Kohm B	138J921 or	←
	P.O.T. 100Kohm B	138A965	←
	MISCELLANEOUS		
2B 5	SHIELD BOTTOM	0VM402970	←
2B 6	SHIELD TOP	0VM403011	←
CN2002	ANGLE SOCKET CONNECTOR 15P IL-SDA-15S-S2L2	1770610	←
CN2003	ANGLE SOCKET CONNECTOR 12P IL-SDA-12S-S2L2	1770607	←
CN2004	CONNECTOR BASE 13P TMC-X13X-A1	JCTMG13TGH0F	←
CN2005	CONNECTOR BASE 13P TMC-X13X-A1	JCTMG13TGH0F	←
CN2006	STRAIGHT PIN HEADER 2P IL-S- 2P-S2T2-EF	1740764	←
CN3501	CONNECTOR BASE 6P TKC-M06X-A1	JCTKG06TGH0F	←
CN4001	CONNECTOR ASS'Y 4P	WX1K6050-006	←
TP2001	TEST PIN RT-08T-1.3BT	1770482	←
TP2002	TEST PIN RT-08T-1.3BT	1770482	←
TP3501	TEST PIN RT-08T-1.3BT	1770482	←

MCV-C PCB ASSEMBLY

Ref. No.	Description	Part No. VIP-3000HC MKIII	Part No. VIP-3000AMKIII
	ASSEMBLY MCV-C PCB CONSISTS OF THE FOLLOWING:	0VSA04108-C	←
	CAPACITORS		
C 5501	ELECTROLYTIC CAP. 47uF/16V M H7	526T476S	←
C 5502	ELECTROLYTIC CAP. 10uF/16V M H7	526T106S	←
C 5503	ELECTROLYTIC CAP. 47uF/6.3V M	126A476S	←
	SEMICONDUCTORS		
D 5501	DIODE 1SS254	A1SS254T77** or	←
	DIODE GMB01B	GMB01BT	←
D 5502	DIODE 1SS254	A1SS254T77** or	←
	DIODE GMB01B	GMB01BT	←
D 5503	DIODE 1SS254	A1SS254T77** or	←
	DIODE GMB01B	GMB01BT	←

Ref. No.	Description	Part No. VIP-3000HC MKIII	Part No. VIP-3000AMKIII
D 5504	LED SLR-34MG4 GREEN	1401239 or	←
	LED SLR-34MG3F GREEN	1401408 or	←
	LED SLR-34MG5 GREEN	1401231	←
D 5505	LED SLR-34MG4 GREEN	1401239 or	←
	LED SLR-34MG3F GREEN	1401408 or	←
	LED SLR-34MG5 GREEN	1401231	←
D 5506	LED SLR-34MG4 GREEN	1401239 or	←
	LED SLR-34MG3F GREEN	1401408 or	←
	LED SLR-34MG5 GREEN	1401231	←
D 5507	LED SLR-34MG4 GREEN	1401239 or	←
	LED SLR-34MG3F GREEN	1401408 or	←
	LED SLR-34MG5 GREEN	1401231	←
D 5508	LED SLR-34VR4 RED	1401240 or	←
	LED SLR-34VR3F RED	1401410 or	←
	LED SLR-34VR5 RED	1401230	←
D 5509	LED SLR-34VR4 RED	1401240 or	←
	LED SLR-34VR3F RED	1401410 or	←
	LED SLR-34VR5 RED	1401230	←
D 5511	LED SLR-34MG4 GREEN	1401239 or	←
	LED SLR-34MG3F GREEN	1401408 or	←
	LED SLR-34MG5 GREEN	1401231	←
D 5512	LED SLR-34DU5F AMBER	1401438	←
D 5513	LED SLR-34DU5F AMBER	1401438	←
D 5514	LED SLR-34VR4 RED	1401240 or	←
	LED SLR-34VR3F RED	1401410 or	←
	LED SLR-34VR5 RED	1401230	←
D 5515	DIODE 1SS254	A1SS254T77** or	←
	DIODE GMB01B	GMB01BT	←
D 5516	DIODE 1SS254	A1SS254T77** or	←
	DIODE GMB01B	GMB01BT	←
D 5517	LED SLR-34MG4 GREEN	1401239 or	←
	LED SLR-34MG3F GREEN	1401408 or	←
	LED SLR-34MG5 GREEN	1401231	←
D 5518	LED SLR-34VR4 RED	1401240 or	←
	LED SLR-34VR3F RED	1401410 or	←
	LED SLR-34VR5 RED	1401230	←
IC5501	IC BA6154	14LF534	←
Q 5501	RES. BUILT-IN TRANSISTOR DTA124ES	A124ESZ or	←
	RES. BUILT-IN TRANSISTOR 2SA1346	A1346Z	←
	RESISTORS		
R 5501	CARBON RES. 1/5W J 390ohm	1324391T or	←
	CARBON RES. 1/6W J 390ohm	132A391T	←
R 5502	CARBON RES. 1/5W J 220ohm	1324221T or	←
	CARBON RES. 1/6W J 220ohm	132A221T	←
R 5503	CARBON RES. 1/5W J 220ohm	1324221T or	←
	CARBON RES. 1/6W J 220ohm	132A221T	←
R 5504	CARBON RES. 1/5W J 390ohm	1324391T or	←
	CARBON RES. 1/6W J 390ohm	132A391T	←
R 5505	CARBON RES. 1/5W J 1Kohm	1324102T or	←
	CARBON RES. 1/6W J 1Kohm	132A102T	←
R 5506	CARBON RES. 1/5W J 470ohm	1324471T or	←
	CARBON RES. 1/6W J 470ohm	132A471T	←
R 5507	CARBON RES. 1/5W J 8.2Kohm	1324822T or	←
	CARBON RES. 1/6W J 8.2Kohm	132A822T	←
R 5508	CARBON RES. 1/5W J 1.1Kohm	1324112T or	←
	CARBON RES. 1/6W J 1.1Kohm	132A112T	←
R 5509	CARBON RES. 1/5W J 10Kohm	1324103T or	←
	CARBON RES. 1/6W J 10Kohm	132A103T	←

Ref. No.	Description	Part No. VIP-3000HC MKIII	Part No. VIP-3000AMKIII
R 5510	CARBON RES. 1/5W J 4.7Kohm	1324472T or	←
	CARBON RES. 1/6W J 4.7Kohm	132A472T	←
R 5511	CARBON RES. 1/5W J 4.7Kohm	1324472T or	←
	CARBON RES. 1/6W J 4.7Kohm	132A472T	←
R 5512	CARBON RES. 1/5W J 22Kohm	1324223T or	←
	CARBON RES. 1/6W J 22Kohm	132A223T	←
R 5513	CARBON RES. 1/5W J 100ohm	1324101T or	←
	CARBON RES. 1/6W J 100ohm	132A101T	←
R 5514	CARBON RES. 1/5W J 560ohm	1324561T or	←
	CARBON RES. 1/6W J 560ohm	132A561T	←
R 5515	CARBON RES. 1/5W J 390ohm	1324391T or	←
	CARBON RES. 1/6W J 390ohm	132A391T	←
R 5516	CARBON RES. 1/5W J 390ohm	1324391T or	←
	CARBON RES. 1/6W J 390ohm	132A391T	←
	SWITCHES		
SW5501	PUSH SWITCH EVQ21505R	5622158Y or	←
	PUSH SWITCH SKHVBE020B KHV-902	5622160Y or	←
	PUSH SWITCH R66-441Q	5622161	←
SW5502	PUSH SWITCH EVQ21505R	5622158Y or	←
	PUSH SWITCH SKHVBE020B KHV-902	5622160Y or	←
	PUSH SWITCH R66-441Q	5622161	←
SW5503	PUSH SWITCH EVQ21505R	5622158Y or	←
	PUSH SWITCH SKHVBE020B KHV-902	5622160Y or	←
	PUSH SWITCH R66-441Q	5622161	←
SW5504	PUSH SWITCH EVQ21505R	5622158Y or	←
	PUSH SWITCH SKHVBE020B KHV-902	5622160Y or	←
	PUSH SWITCH R66-441Q	5622161	←
SW5505	PUSH SWITCH EVQ21505R	5622158Y or	←
	PUSH SWITCH SKHVBE020B KHV-902	5622160Y or	←
	PUSH SWITCH R66-441Q	5622161	←
SW5507	SLIDE SWITCH 1C-2P	1621664	←
SW5508	PUSH SWITCH EVQ21505R	5622158Y or	←
	PUSH SWITCH SKHVBE020B KHV-902	5622160Y or	←
	PUSH SWITCH R66-441Q	5622161	←
SW5510	PUSH SWITCH EVQ21505R	5622158Y or	←
	PUSH SWITCH SKHVBE020B KHV-902	5622160Y or	←
	PUSH SWITCH R66-441Q	5622161	←
	MISCELLANEOUS		
2B 7	HOLDER L.E.D. K2512ZA	0VM200771	←
CN5501	CONNECTOR BASE 18P TRC-X18X-A1	JCTRG18TGH0C	←
RS5501	REMOTE SENSOR UNIT SFN-R0011	1812501 or	←
	REMOTE CONTROL UNIT RCDHC-278	USESJRSKK008	←
VR5501	VOLUME 5Kohm B	VRCB502MS007 or	←
	VOLUME 5Kohm B	VRCB502AL007	←

FRONT & CABINET EXPLODED VIEW

*Marked parts See the Electrical Parts List.

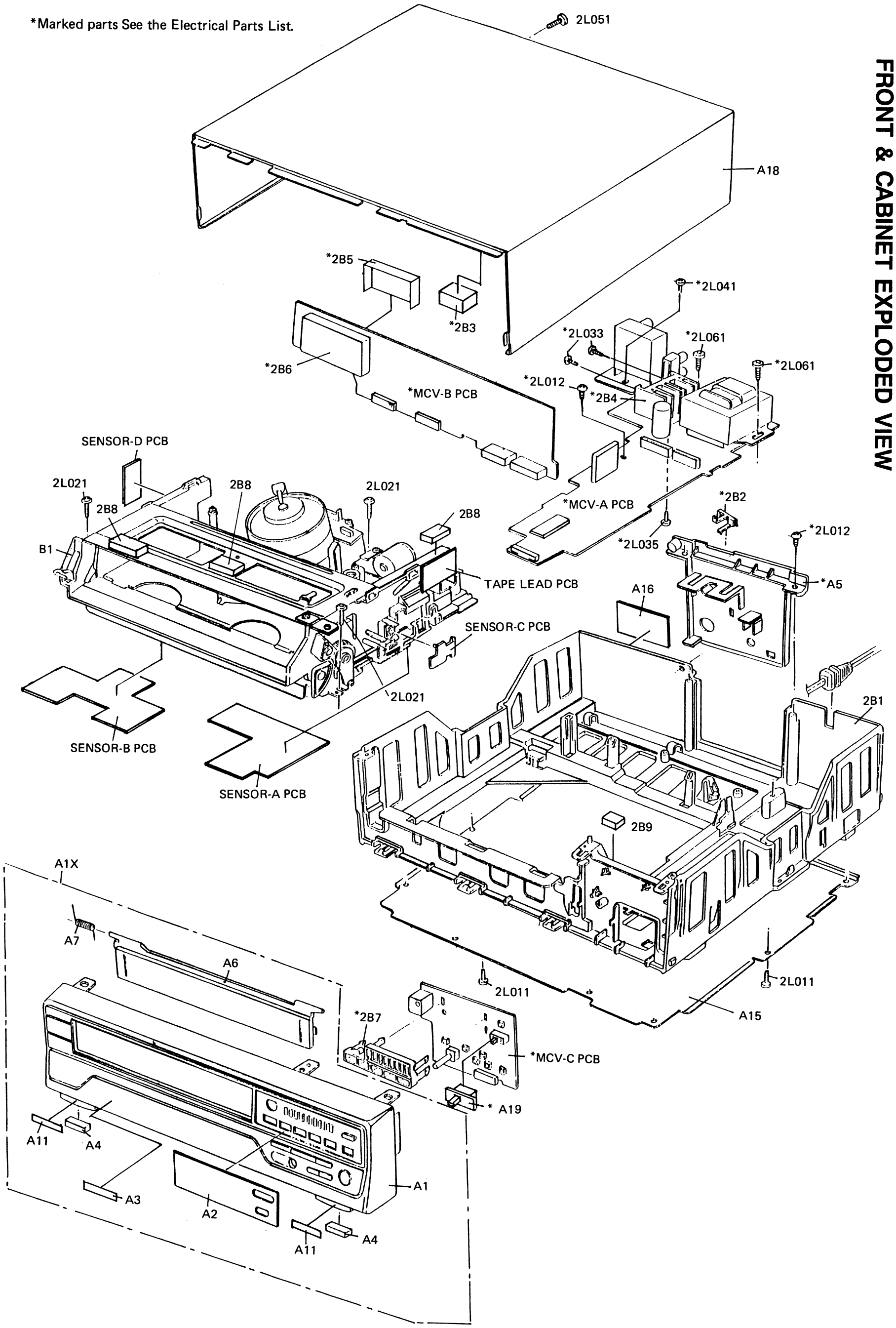

K6050CEX

MECHANICAL PARTS LIST

PRODUCT SAFETY NOTE: Products marked with a ⚠ have special characteristics important to safety. Before replacing any of these components, read carefully the product safety notice of this service manual. Don't degrade the safety of the product through improper servicing.
*Tolerance of Capacitors and Resistors are noted with the following symbols.

Ref. No.	Description	Part No. VIP-3000HCMKIII	Part No. VIP-3000AMKIII
A 1X ⚠	FRONT ASS'Y	0VM201006	0VM201000
A 1	FRONT PANEL ASS'Y	0VM201006X	0VM201000X
A 2	PLATE MODE	0VM403077	←
A 3	BADGE	6D52254	←
A 4	FOOT	6E50453	←
A 6	DOOR CASSETTE	0VM301060	←
A 7	SPRING DOOR	6V50109	←
A 8	BUTTON MODE	0VM402105	←
A 9	BUTTON TRACKING	0VM301049	←
A 11	FILM INSULATOR	0VM402167	←
A 15	PANEL BOTTOM	0VM200901	←
A 16 ⚠	LABEL RATING	0VM403331	0VM403407
A 18	CASE TOP	0VM100247	←
B 1	DECK ASS'Y JPD001/VM1110	N1110XA	←
2B 1	CHASSIS (P/B VM350)	0VM000014	←
2B 2	PLATE GROUND(RF CONVERTER)	0VM402972	←
2L 011	P TIGHT SCREW M3X10 BIND+	DZM23100	←
2L 012	P TIGHT SCREW 3X10 BIND+	GBMP310	←
2L 021	P TIGHT SCREW M3X10 WASHER HEAD	GCMP3100	←
2L 051	P TIGHT SCREW 4X12 BIND+	GBKP4120	←
2L 061	P TIGHT SCREW 4X12 BIND+	GBMP4120	←
	ACCESSORY KIT		
X 1 ⚠	REMOCON BOX	UREMT12SR006	←
X 2 ⚠	OWNER'S MANUAL	0VMN00857	0VMN00872
X 3	RF CORD PAL 1.2M	WPZ0122TM001	←

DECK MECHANISM SECTION

STANDARD MAINTENANCE

SERVICE SCHEDULE OF COMPONENTS

○:Check ●:Change

Deck		Periodic Service Schedule			
Ref. No.	Parts Name	1,000 H	2,000 H	3,000 H	4,000 H
2	Upper Drum	○	●	○	●
134	Pinch Roller (A)		●		●
171	Capstan Motor Assembly		●		●
229	Clutch Assembly		●		●
281	LM Assembly (Loading Motor)			●	
173	Main Belt		●		●
196	Back Tension Band		●		●
233	Drive Belt		●		●
251	Brake Shoe		●		●
285	Loading Belt		●		●
373	Front Loading Belt		●		●
14, 19	Drum Ground			●	
82	ACE Head			●	
92	Full Erase Head			●	
121	Reel Assembly			●	

Note:

1. Clean all parts for the tape transport (Upper Drum with video head / Pinch Roller Audio Control Head / Full Erase Head) using Isoprophyl Alcohol 91%.
2. After cleaning up the parts, perform all DECK ADJUSTMENTS.
3. All Reference Numbers listed above refer to parts shown on Deck Exploded View .

CLEANING

1. Cleaning of Video Head (using a Head Cleaning Stick).

Procedure

1. Remove the top cabinet.
2. Put on a glove (thin type) to avoid touching the upper drum and lower drum with bare hand.
3. Put a few drops of Isoprophyl alcohol 91% on the Head Cleaning Stick, and by slightly placing it against the head tip, allow the upper drum to turn to the right and left.

NOTE:

1. The video head is made of a very hard material, but since it is very thin, avoid cleaning it vertically.
2. Wait for the cleaned part to dry out before operating the unit or damage will occur.
3. Do not reuse the stained Head Cleaning Stick.

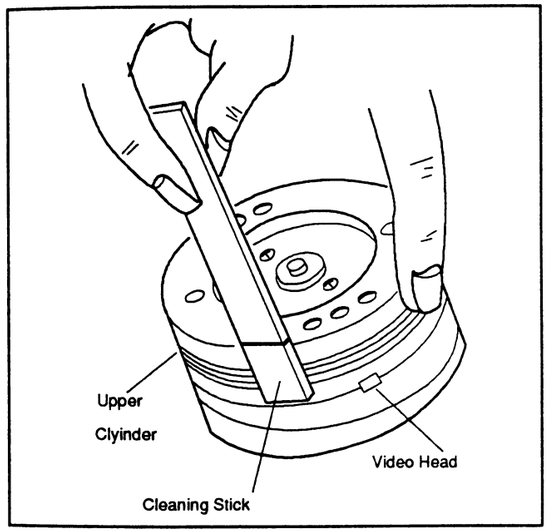

2. Cleaning of Audio Control Head (using a Q-Tip).

Procedure

1. Remove the top cabinet of VCR unit.
2. Put a few drops of Isoprophyl alcohol 91% on the Q-Tip, clean up the audio control head, being careful not to damage the upper drum and other tape running parts.

NOTE:

1. Avoid cleaning audio control head vertically.
2. Wait for the cleaned part to dry well, before operating the unit or damage will occur.

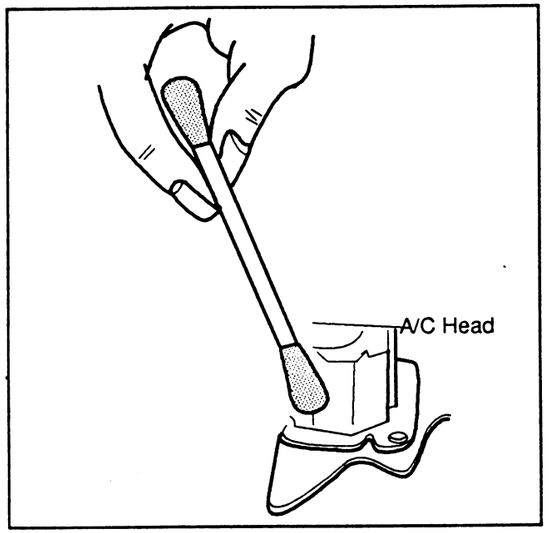

SERVICE FIXTURES AND TOOLS

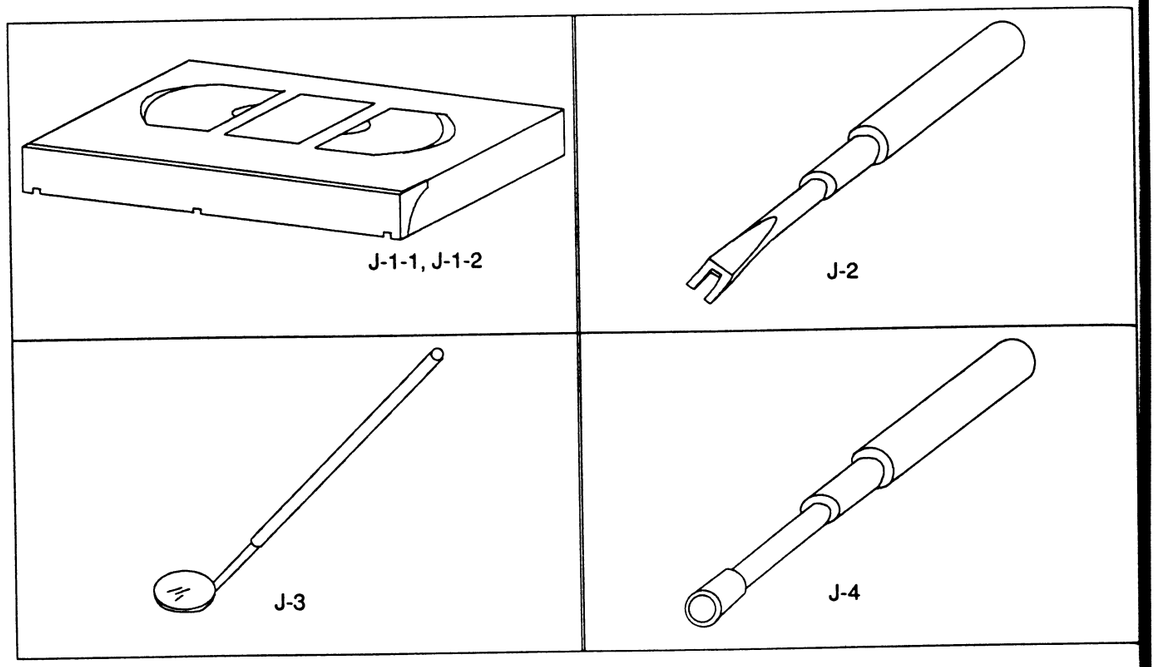

Ref. No.	Name	Adjustment
J-1-1	Alignment Tape (F6-A)	Head Adjustment of Audio Control Head
J-1-2	Alignment Tape (F6-N) : SP Model	Azimuth Adjustment of Audio Control Head / X Value
	Alignment Tape (F6-NS) : LP Model	/ Confirmation / Adjustment of Envelope Waveform
J-2	Special Driver (FSJ-0001)	Control Head / Tape Guide Height
J-3	Mirror (FSJ-0004)	Tape Transportation Check
J-4	Box Driver, Mx3 (FSJ-0005)	Guide Pole / A/C Head Height

DISASSEMBLY/ASSEMBLY PROCEDURES OF MECHANISM

This procedures starts with the Condition that the Cabinet Parts, Cassette Up Unit and Head Amp C.B.A. have been removed. Also, all the following procedures for adjustment and parts replacement should be performed in Stop mode. When reassembling, perform the steps in the reverse order.

STEP /LOC. NO	START -ING NO.	PART		REMOVAL		INSTALLATION
				FIG. NO	REMOVE*UNHOOK/UN-LOCK/RELEASE/UN-PLUG/UNSOLDER	ADJUSTMENT CONDI-TION
[1]	1	TENSION LEVER ASS'Y	T	DM1 DM3	*(P-1),*(L-1)	(+)
[2]	2	HAND BRAKE LEVER ASS'Y	T	DM1 DM3	(S-1)	
[3]	3	MODE CANGE LEVER	T	DM1 DM4	*2(L-2)	
[4]	3	M BRAKE (S)	T	DM1 DM5	*(P-2)	(+) When reassembling, hook the Spring after in-stallation of Mode Change Lever
[5]	3	M BRAKE (S) LEVER	T	DM1 DM5		
[6]	3	S BRAKE ARM	T	DM1 DM5	*(P-3)	When reassembling, hook the Spring after in-stallation of Mode Change Lever
[7]	3	M BRAKE (T)	T	DM1 DM5		
[8]	3	T BRAKE ARM	T	DM1 DM5	*(P-4)	When reassembling, hook the Spring after in-stallation of Mode Change Lever
[9]	3	REEL HOLDER (S) ASS'Y	T	DM1 DM6	Poly Slider Washer	(+)
[10]	3	REEL HOLDER (T) ASS'Y	T	DM1 DM6	Poly Slider Washer	(+)
[11]	11	MOTOR HOLDER ASS'Y	T	DM1 DM7	3(S-2), BELT	(+) Each post should be installed in correct posi-tion. Refer to Fig. DM6
[12]	11	PINCH ROLLER ASS'Y	T	DM1 DM7	(C-1), Pinch Roller Spring	(+)
[13]	11	PINCH ROLLER SUPPORT ARM ASS'Y	T	DM1 DM7		(+)
[14]	11	CAM GEAR	T	DM1 DM7		(+)
[15]	11	MAIN LEVER ASS'Y	T	DM1 DM8	*(L-3) Main Lever Spring	
[16]	16	TAPE GUIDE ASS'Y	T	DM1 DM8	*(P-5), *(L-4)	
[17]	11	WORM ASS'Y	T	DM1 DM9	*(L-5) Belt	
[18]	18	A/C HEAD ASS'Y	T	DM1 DM8	Nylon Nut, Adjust Nut, Head Height Adjustment Spring	
[19]	19	EARTH BLUSH ASS'Y	T	DM1 DM10	(S-3)	When reassembling, confirm the brush is at center of post.
[20]	19	CYLINDER UNIT	T	DM1 DM10	3(S-4), 3(S-5) Connec-tor	
[21]	19	CYLINDER BASE	T	DM1 DM10		
[22]	22	CLUTCH ASS'Y	T	DM1 DM11	2(S-6)	
[23]	23	SENSOR PCB	B	DM2 DM12	2(S-7), (S-8)	
[24]	24	CAPSTAM MOTOR UNIT	B	DM2 DM12	3(S-9)	
[25]	24	LOADING ARM M ASS'Y	B	DM2 DM12	(C-2)	When installing, match the marks.
[26]	26	REC ARM (REC/PLAY MODEL ONLY)	B	DM2	(P-6)	When reinstalling, at first install the A portion of Loading Arm M Ass'y.
[27]	26	BACK TENSION DRIVE ARM	B	DM2 DM13	(S-10), (P-7)	
[28]	20	MOVING GUIDE S ASS'Y	T	DM1 DM14		

STEP /LOC. NO	START -ING NO.	PART		REMOVAL FIG. NO	REMOVE*UNHOOK/UN-LOCK/RELEASE/UN-PLUG/UNSOLDER	INSTALLATION ADJUSTMENT CONDI-TION
[29]	20	MOVING GUIDE T ASS'Y	T	DM1 DM14		(+)
[30]	20	LOADING GEAR B	B	DM2 DM15		(+)
[31]	20	LOADING GEAR A	B	DM2 DM15		(+)
[32]	20	LOADING ARM B SUB ASS'Y	B	DM2 DM15	(P-8)(P-9)	(+)
[33]	20	LOADING ARM A SUB ASS'Y	B	DM2 DM15		(+)
①	②	③		④ ⑤	⑥	⑦

Note :

1. Order of steps in Procedure. When reassembling, perform the step(s) in the reverse order
   These number are also used as the identification (Location) No. of parts in Figures.
2. Starting No. followed by corresponding part which any other parts. But M Brake S can be removed without after removing Mode Change Lever (No. 1)
3. Parts to be removed or installed
4. Location of part T=Top B=Bottom R=Right L=Left
5. Fig. No Showing Procedure or Part Location
6. Identification of part to be removed, unhooked, unlocked, released, unplugged, unclamped or unsoldered
   P=Spring W=Washer C=Cut Washer S=Screw *=Unhook, Unlock unrelease unplug unsolder
   2 (C-2) = 2 Cut Washer (C-2)
7. Adjustment information for installation (+)
   Refer to Deck Exploded Views for lubrication information

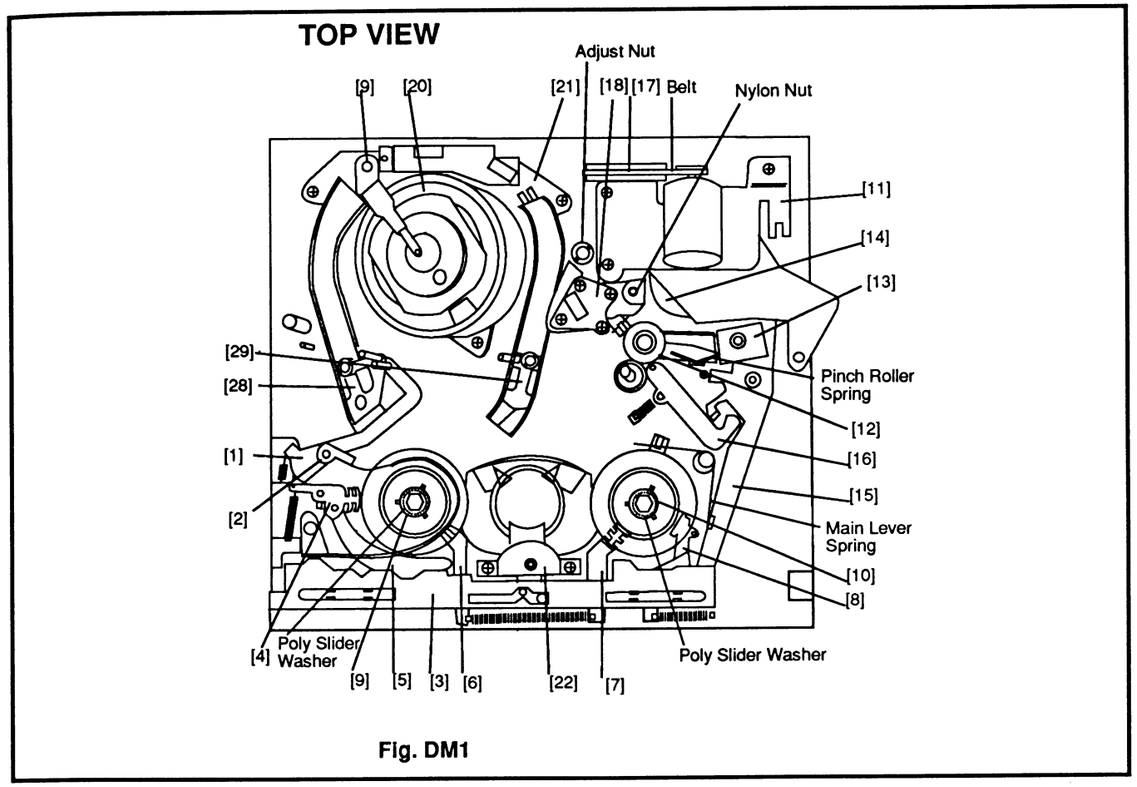

Fig. DM1

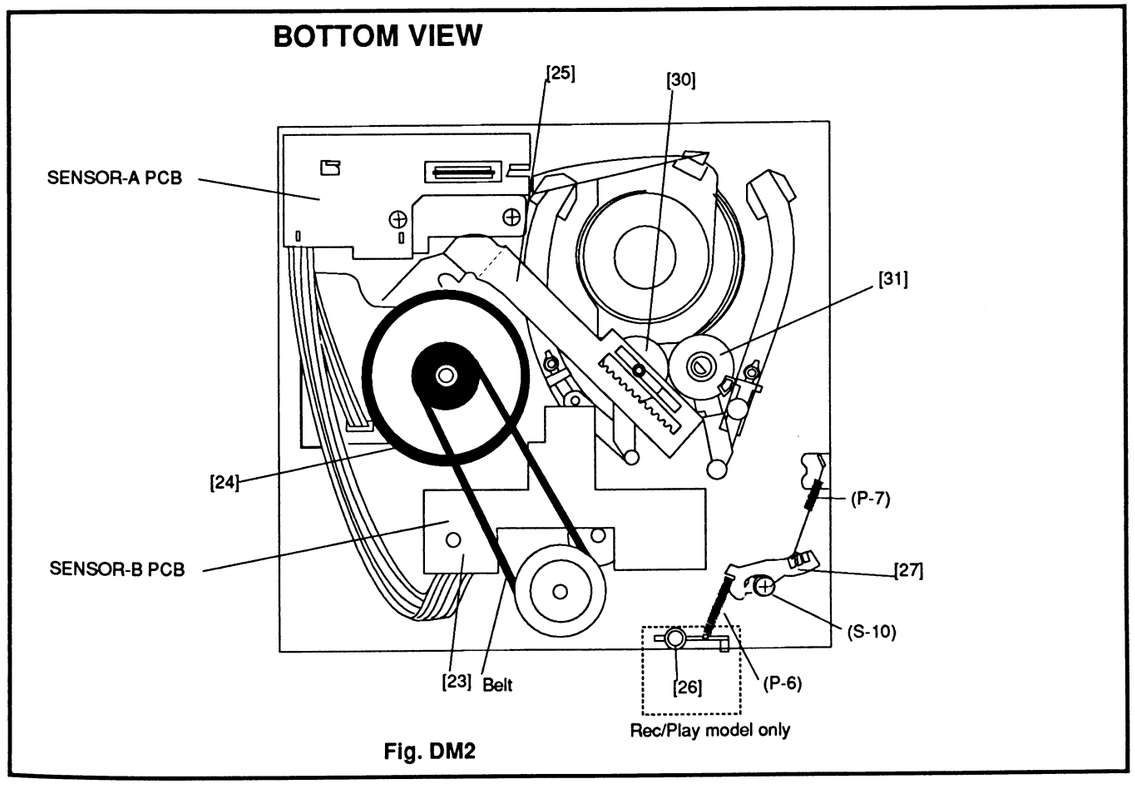

Fig. DM2

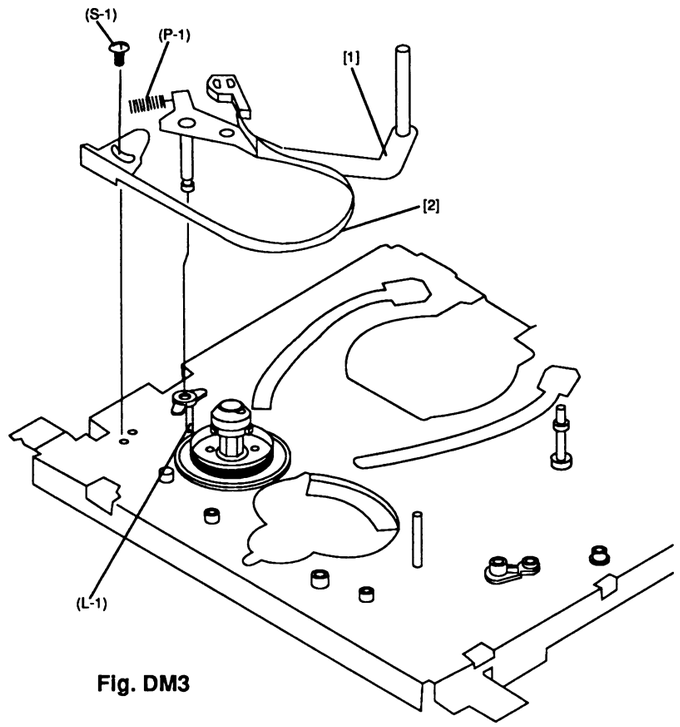

Fig. DM3

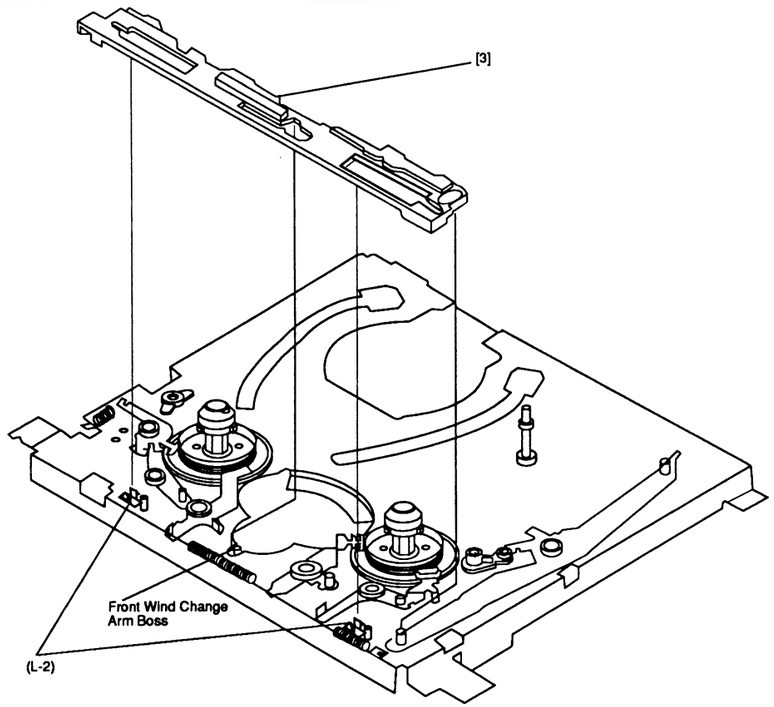

Fig. DM4

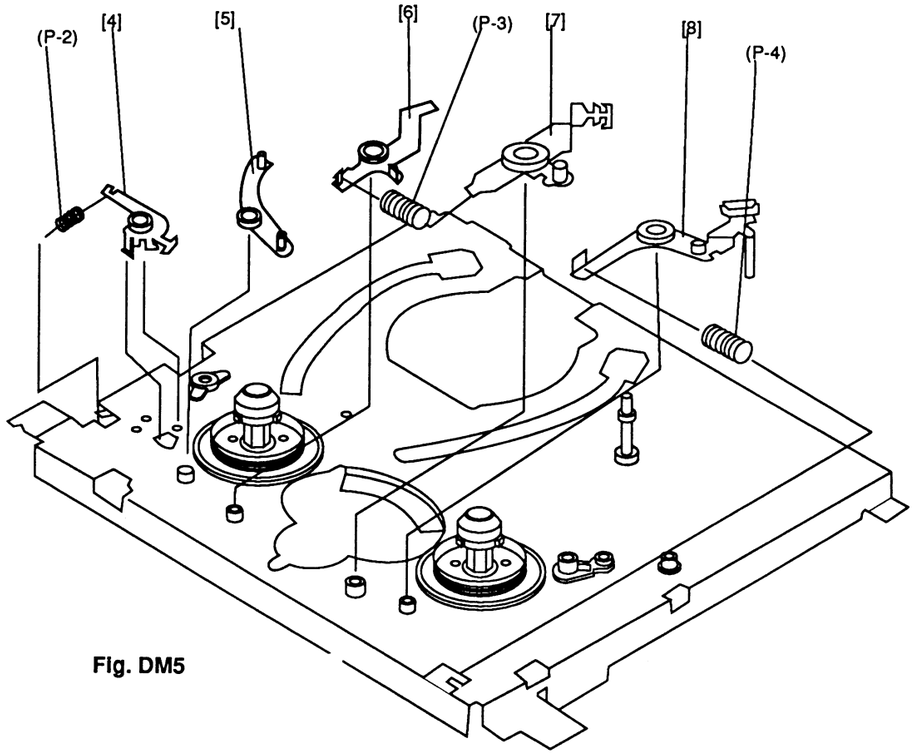

Fig. DM5

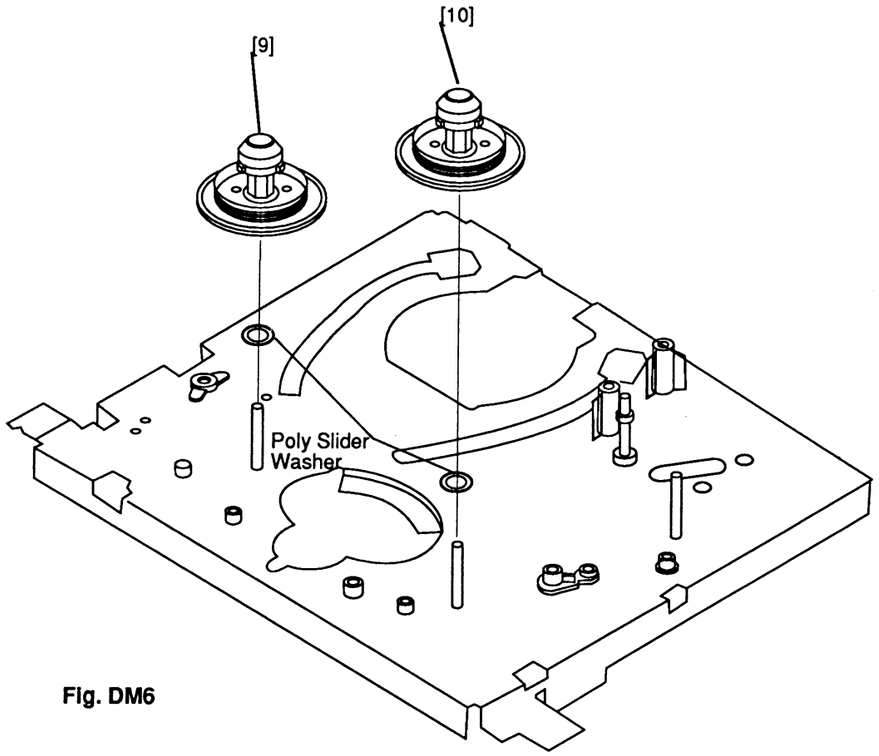

Fig. DM6

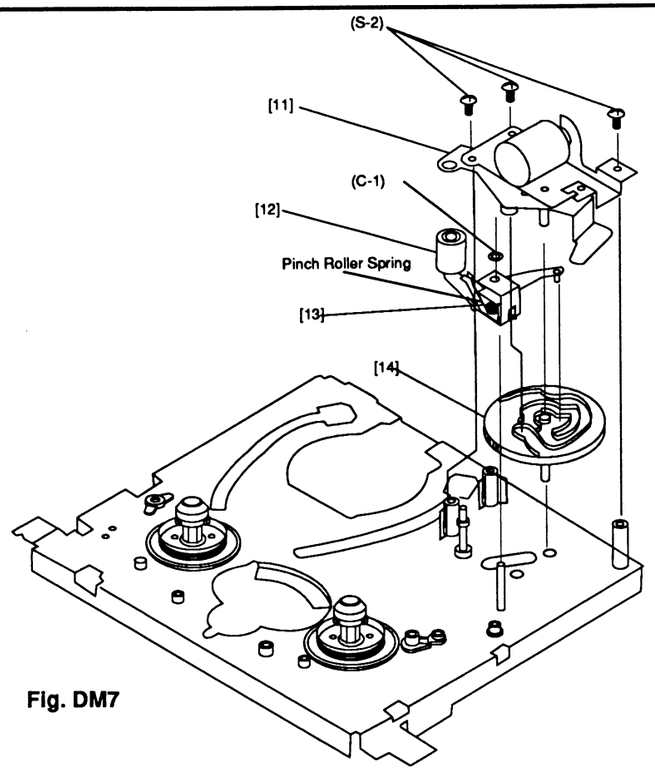

Fig. DM7

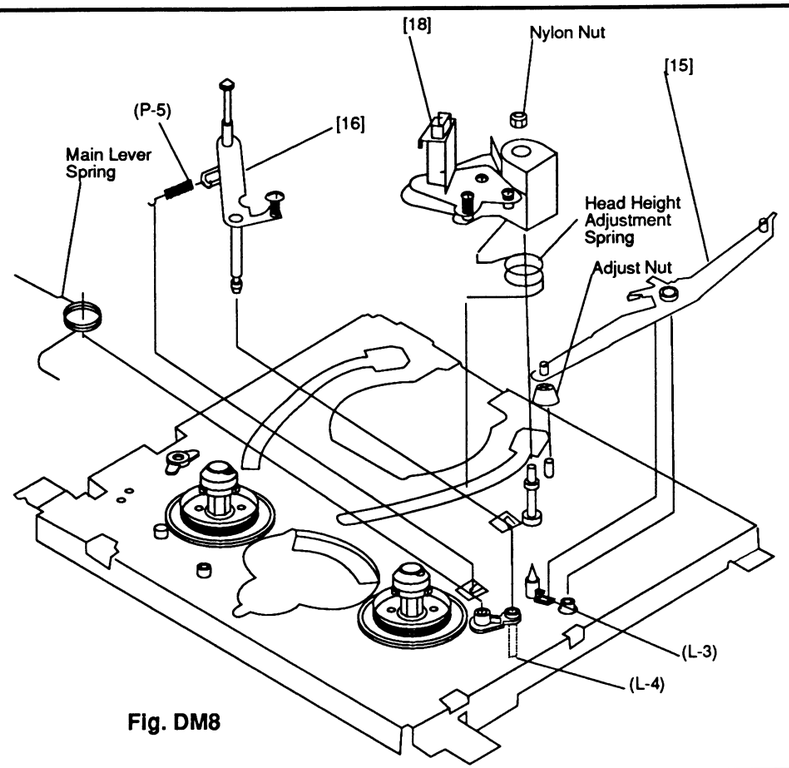

Fig. DM8

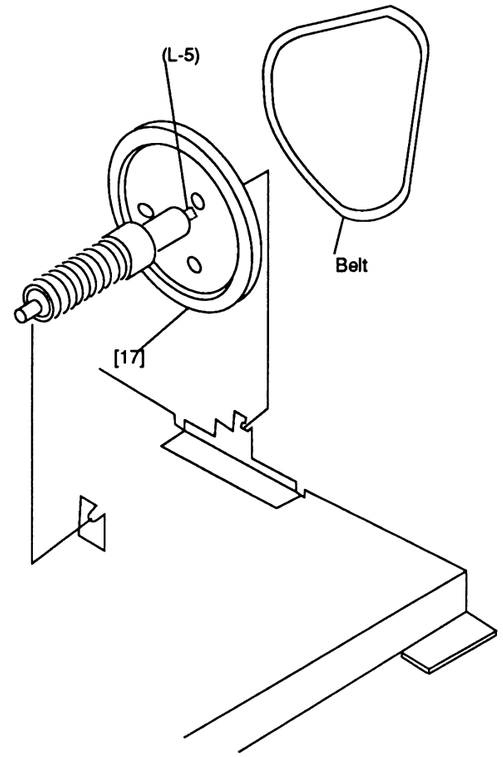

Fig. DM9

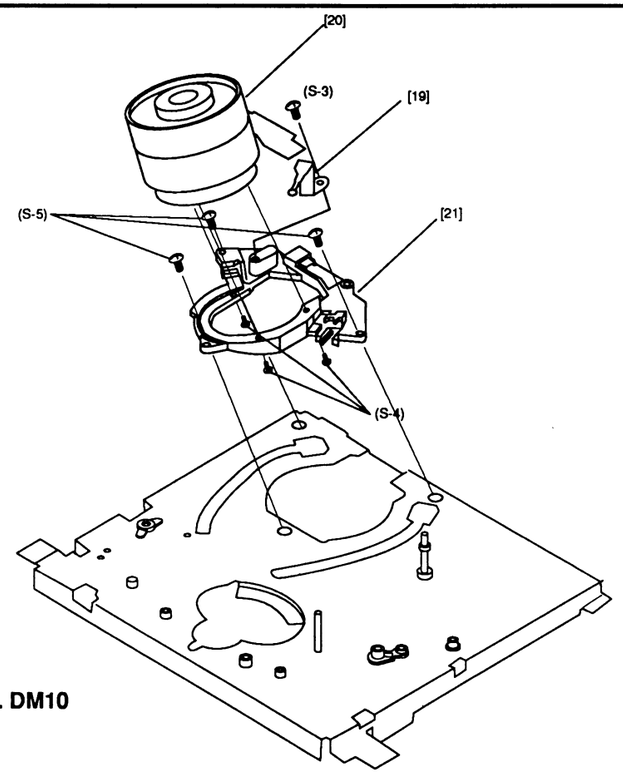

Fig. DM10

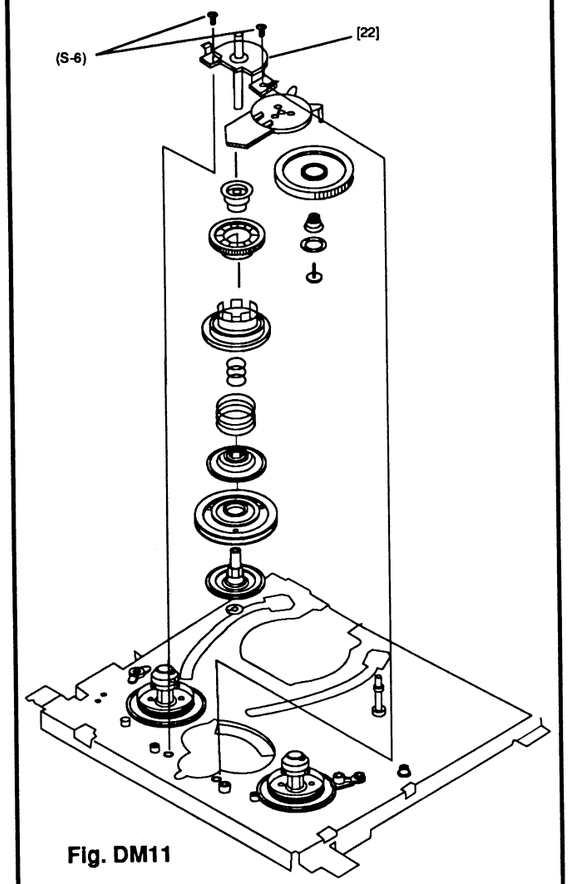

Fig. DM11

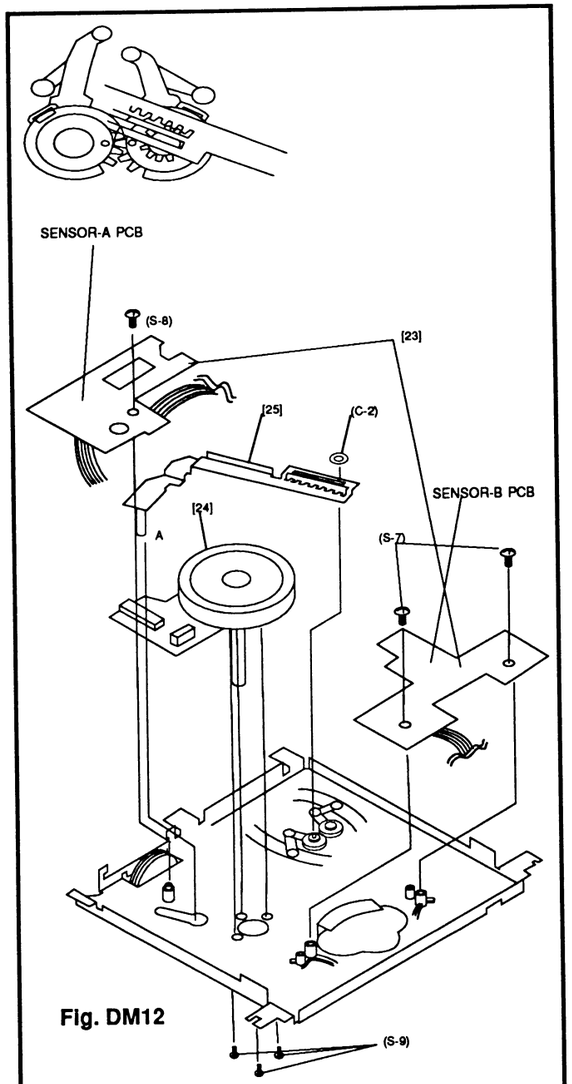

Fig. DM12

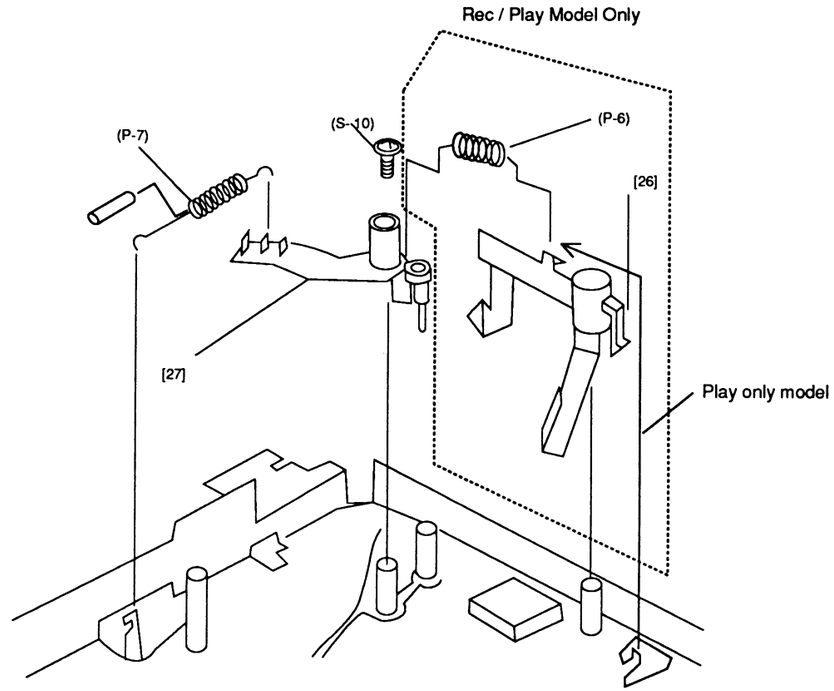

Fig. DM13

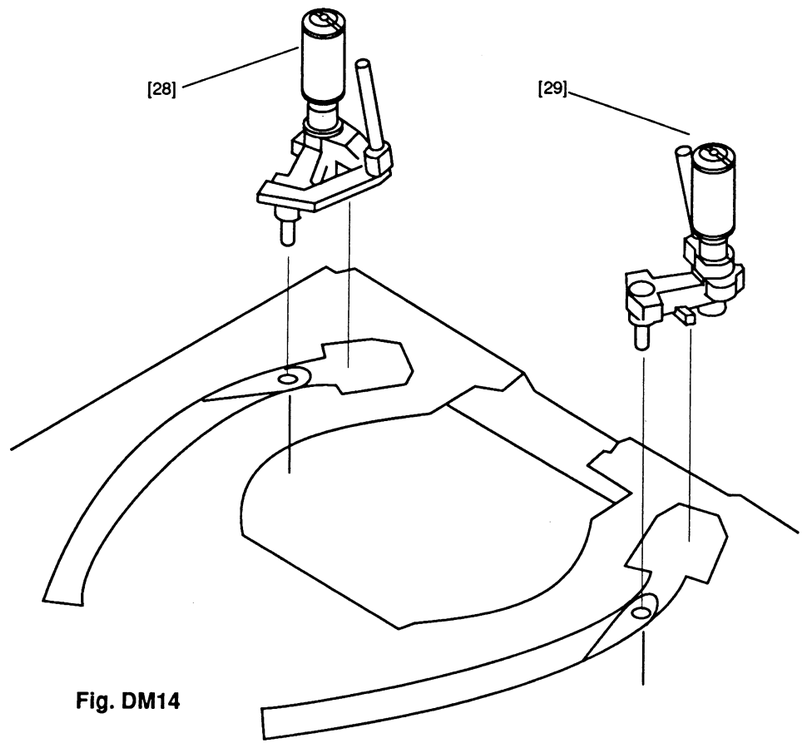

Fig. DM14

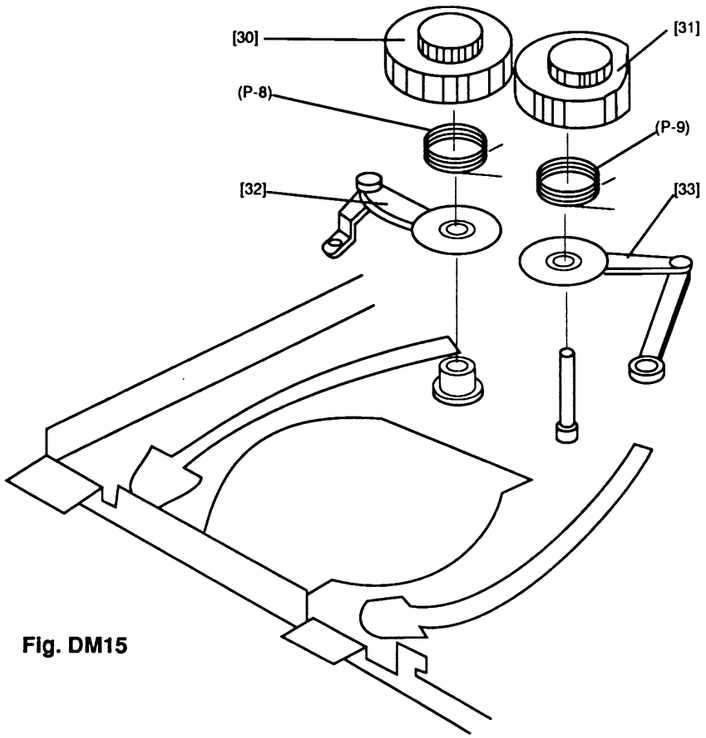

Fig. DM15

DISASSEMBLY/ASSEMBLY AND ADJUSTMENT OF CASSETTE UP UNIT

This procedure starts with the condition that the Cassette Up Unit hase removed from chassis. When reassembling, perform the step(s) in the reverse order.

STEP /LOC. NO	START -ING NO.	PART		REMOVAL FIG. NO	REMOVE*UNHOOK/UNLOCK/RELEASE/UNPLUG/UNSOLDER	INSTALLATION ADJUSTMENT CONDITION
[1]	1	Cassette Drive Gear (R)	R	DM16	*(L-1) Cassette Drive Gear Spring	Refer to setting Condition in Fig. DA1.
[2]	1	MAIN RACK R Support Rack Spring	R	DM16	*(L-2)	
[3]	3	DOOR OPENER	R	DM16	Door Opener Spring	When installing the Door Opener Spring, refer to setting Condition in Fig. DM1.
[4]	4	CASSETTE DRIVE GEAR L	(L)	DM17	Cassette Drive Gear Spring, *(L-3)	
[5]	4	INTERLOCKING GEAR (L)	L		*(L-4)	
[6]	4	FRONT DOOR OPENER	L	DM17	Front Door Spring	When installing, refer to the setting Condition in Fig. DM2.
[7]	7	CASSETTE HOLDER PLATE		DM18	*2(L-5)	
①	②	③	④	⑤	⑥	⑦

Note:

1. Order of steps in Procedure
   When reassembling, perform the step(s) in the reverse order.
   These number are also used as the identification (Location) No. of parts in Figures.
2. Starting No. followed by corresponding part which any other parts. But M Brake S can be removed without after removing Mode change Lever (No. 1)
3. Parts to be removed or installed
4. Location of part T=Top B=Bottom R=Right L=Left
5. Fig. No Showing Procedure or Part Location
6. Identification of part to be removed, unhooked, unlocked, released, unplugged, unclamped or unsoldered
   P=Spring W=Washer C=Cut Washer S=Screw *=Unhook, unlock unrelease unplug unsolder
   2 (C-2) = 2 Cut Washer (C-2)
7. Adjustment information for installation (+)
   Refer to Deck Exploded Views for lubrication information

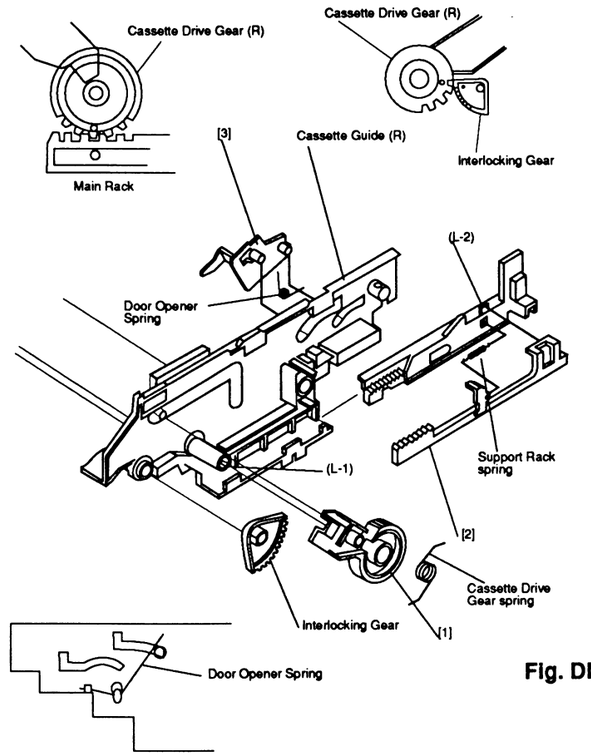

Fig. DM16

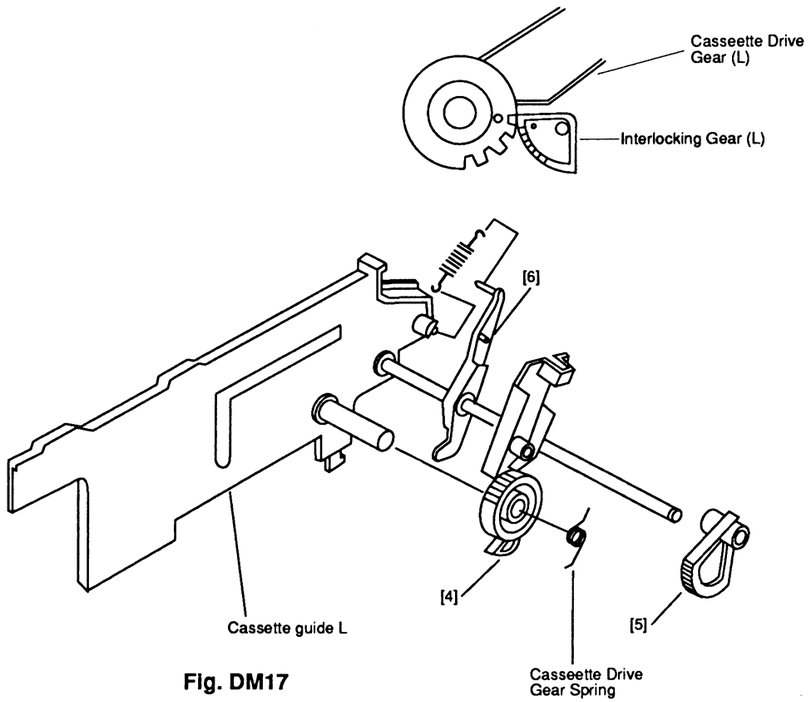

Fig. DM17

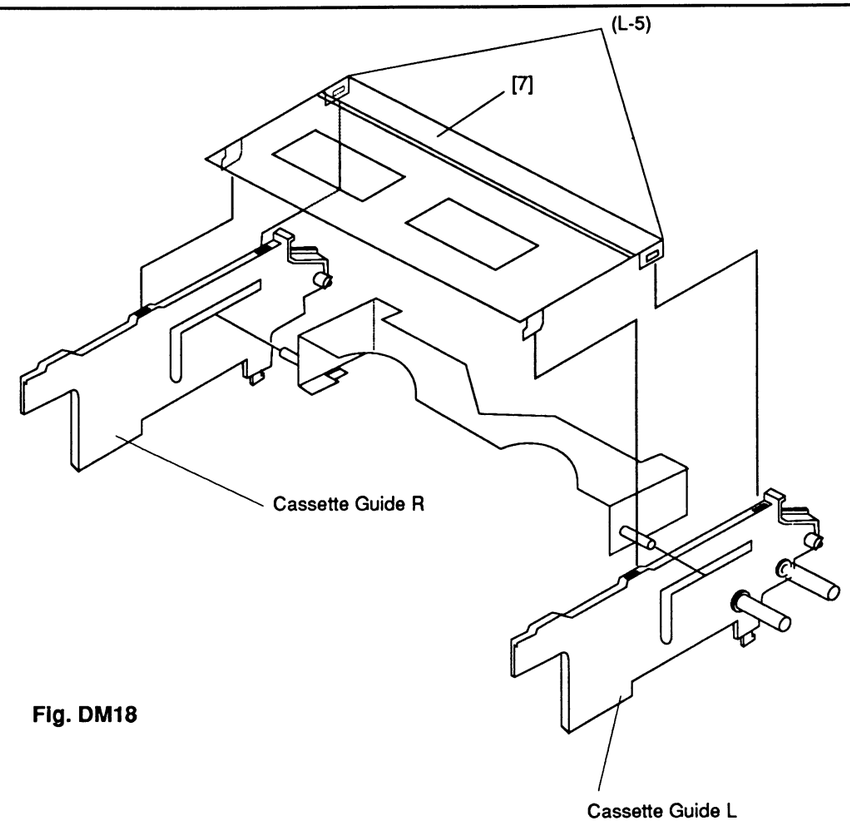

Fig. DM18

MECHANICAL ADJUSTMENT PROCEDURES

SERVICE INFORMATION

A. Method for Manual Tape Loading/Unloading of VCR.
To place the Cassette Holder in the down position, turn the Worm Wheel clockwise inserting a tape. To be placed it in the up position, turn the Worm Wheel counterclockwise.

B. How to place the Cassette Holder in the down position without a cassette tape.

METHOD 1
1. Disconnect AC Plug and remove the Top Cover.
2. Cover the Start Sensor and End Sensor, or LED Sensor.

Note: When handling Tape Sensor, take care of the static electricity.

3. Turn the Worm Wheel clockwise depressing the C Sensor Plate using such a screw driver.

METHOD 2
1. Disconnect AC Plug and remove the Top Cover.
2. Cover the Start Sensor and End Sensor, or LED Sensor.

Note: When handling Tape Sensor, take care of the static electricity.

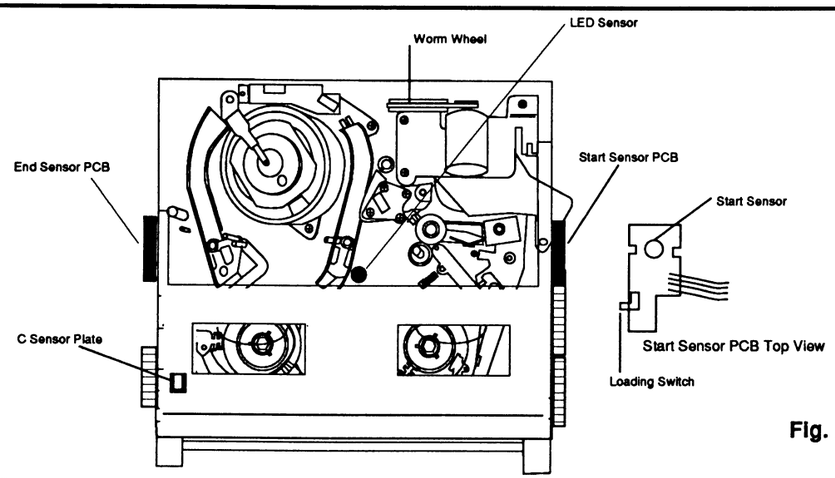

Fig. M1

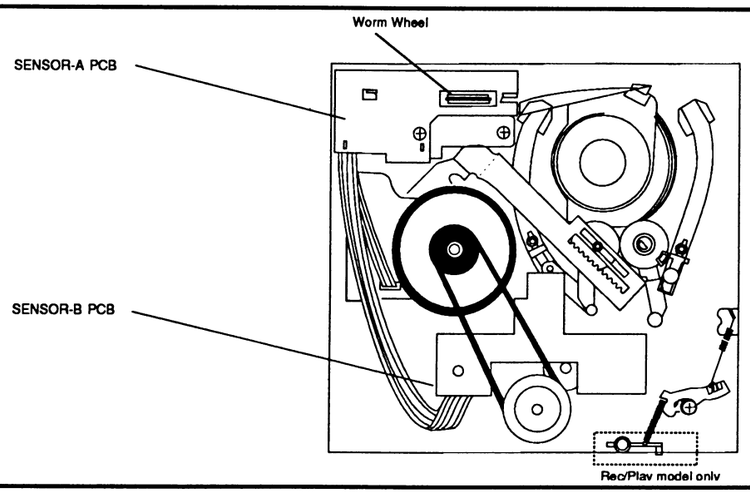

Fig. M2

3. Connect the AC Plug, then push the Cassette Holder inside of deck depressing the C Sensor Plate using such a screw driver.

METHOD 3
1. Disconnect the AC plug and remove the Top Case.
2. Cover Start Sensor and End Sensor, or LED Sensor.
3. Remove the Start Sensor PCB to release the Loading Switch.
4. Depressing the C Sensor Plate using such a screw driver, connect AC plug.

1. TAPE INTERCHANGE ABILITY ADJUSTMENT (FINAL ADJUSTMENT)

Note: To perform these adjustment/confirmation procedures make sure that the Tracking Control is set in the Neutral position.

Equipment required :
Dual Trace Oscilloscope
VHS Alignment Tape(F6-A, F6-N8)
Post Adjustment Screwdriver
X-Positon Adjustment Fixture
Screwdriver (Lock the Tape Guide Rollers)
Box Driver M3

Note: After this Mechanical Adjustment, perform the Electrical Adjustment method.

Tape Running Adjustment Flow Chart

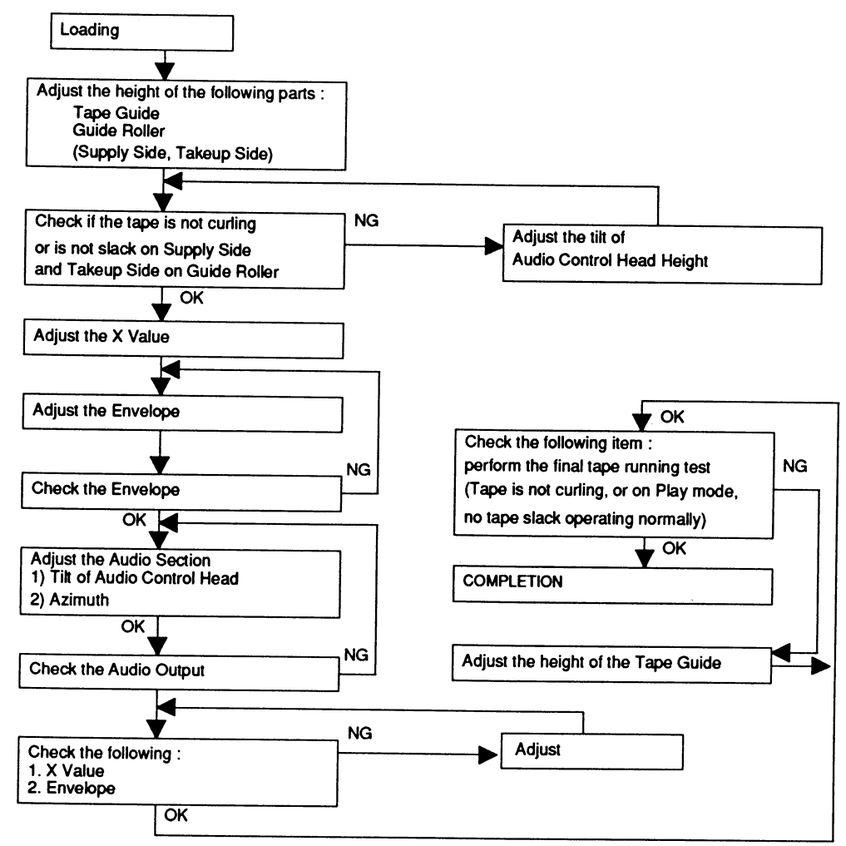

1-A. CONFIRMATION AND ADJUSTMENT OF TAPE RUNNING

Purpose:

To make sure that the tape running is well stabilized.

Symptom of Misadjustment:

If the tape runs with instability, the tape will be damaged.

1. Play back a cassette tape and confirm that the tape runs without curling or creasing at the guide rollers [2] and [3] and at the point A and B on the lead surface. (Refer to Fig M3 and M4).
2. If curling or creasing is apparent, adjust the height of guide rollers by turning the top of guide rollers [2] and [3] with Post Adjustment Screwdriver. (Refer to Fig. M3 and M4)

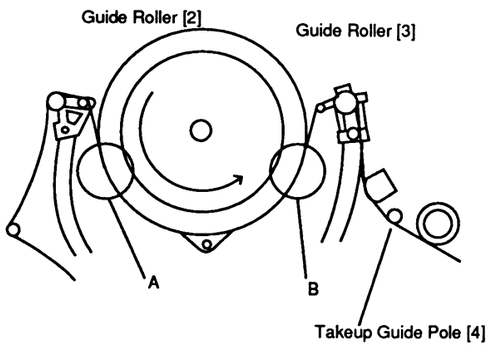

Fig. M3

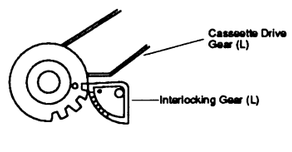

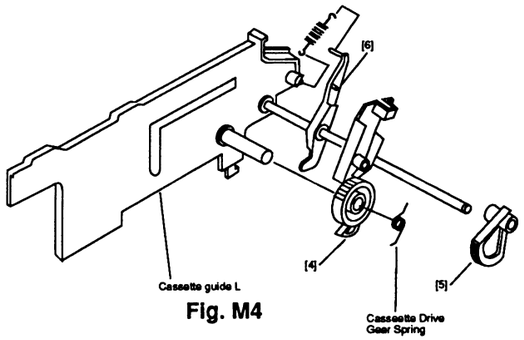

Fig. M4

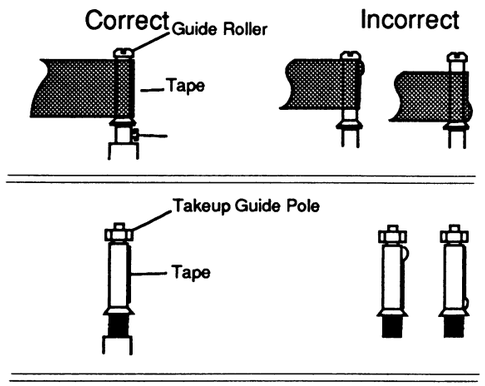

Fig. M5

1-B. CONFIRMATION OF AUDIO CONTROL HEAD HEIGHT.

Purpose :

To make sure that the tape runs properly along the Contorl Head.

Symptom of Misadjustment:

If the control signal is not properly picked up, Servo Operation can not be achieved.

This confirmation is required when the Audio Control Head is replaced and for a preliminary height adjustment.

For final adjustment, perform items 1-C and 1-D.

1. Play back a cassette tape. Looking at the Lower edge of the Contorl Head with the tape in motion, ensure that the lower edge of the tape runs 0.15mm above the lower edge of the Contorl Head. If it does not run turn Height Adjustment Nut [A] slightly in either direction as necessary to correct it. Turn clockwise to lower the head and counterclockwise to raise it. (Refer to Fig. M7)

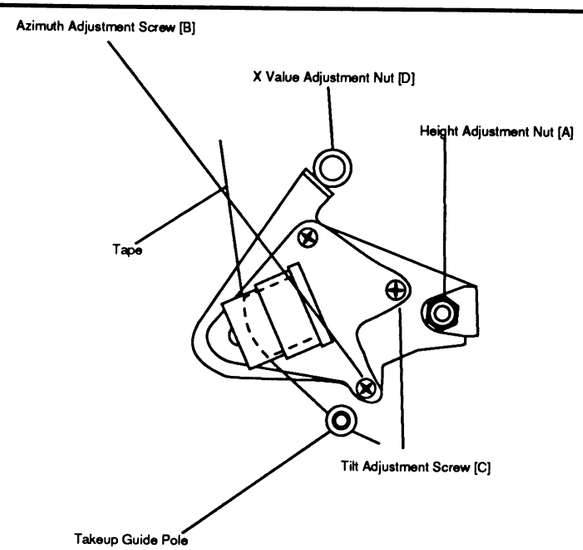

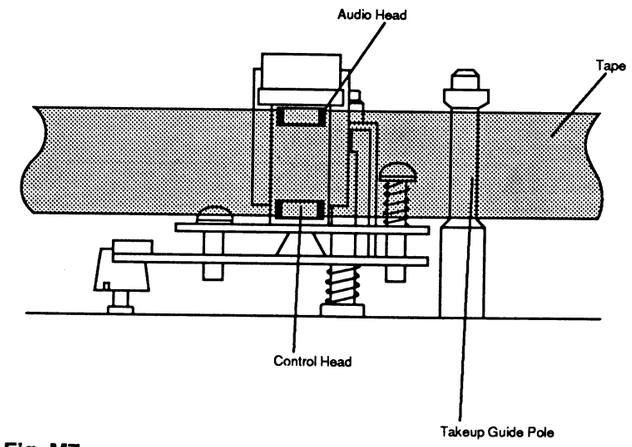

Fig. M7

1-C. CONFIRMATION OF TILT OF AUDIO CONTROL HEAD

Purpose:

To confirm that the tape running is well stabilized. In particular, confirm that tape properly picks up the Audio Signal at the upper part and Control Signal at lower part.

Symptom of Misadjustment:

If the tilt of the Audio Contorl Head is poorly adjusted, the tape eventually damaged.

Play back a cassette tape and confirm that the tape running between Takeup Guide Pole [4] in Fig. M3 and Audio Contorl Head has no slack. If tape has slack, adjust the Control Head by turning tilt adjustment screw in Fig. M7 so that the tape has no slack.

1-D. HEIGHT ADJUSTMENT OF AUDIO CONTORL HEAD

Purpose:

To adjust the position and height of Audio Control Head so that it meets the tape tracks properly.

Symptom of Misadjustment:

If the position of Audio Contorl Head is not properly adjusted, the Audio S/N Ratio or Frequency Response is also poor.

1. Connect the oscilloscope to the audio output jack on the rear of deck.
2. Confirm that the Tape running condition between Takeup Guide Roller and Audio Contorl Head have no tape slack. If it has tape slack, remove the tape slack by turning the Tilt Adjustment screw [C]. Then readjust the height of Guide Roller (Item 1-A) and X Value (Item-E).
3. Play back the Monoscope Portion (6kHz, Audio)of the alignment tape (F6-N8), then confirm that the audio signal output level is 1KHz, finally adjust the Height Adjustment Nut [A] so that the output level is at maximum.
4. Adjust the Azimuth Height Adjustment Nut [B] so that the output level of AC Voltmeter Value is at maximum.

Note: Fix the screw [C] with lock paint after readjustment.

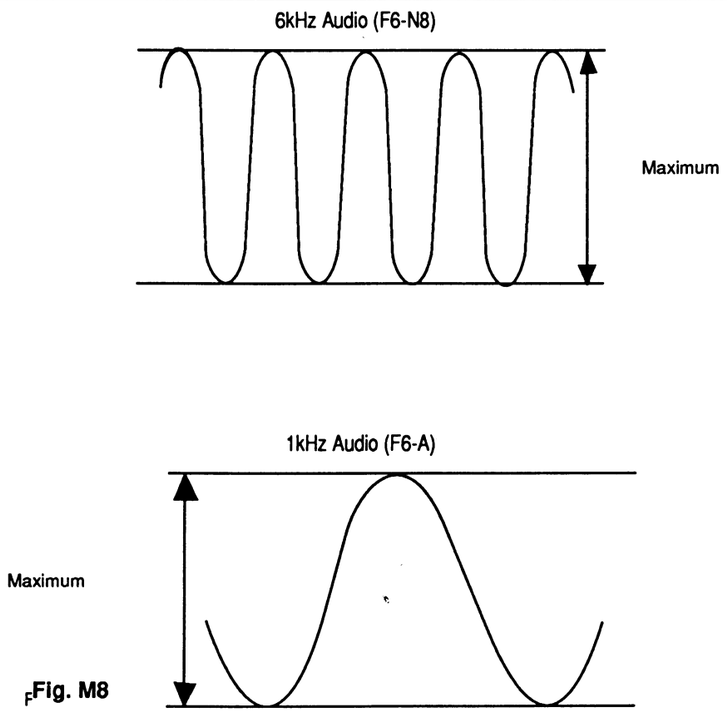

Fig. M8

Azimuth Adjustment of Audio Contorl Head

Purpose:

To adjust the Azimuth adjustment so that the Control Head meets tape tracks properly.

Symptom of Misadjustment:

If the position of Audio Contorl Head is not properly adjusted, the Audio S/N Ratio or Frequency Response is also poor.

1. Connect the oscilloscope to the audio output jack on the rear of the deck.
2. Play back the Monoscope Portion (6kHz, audio) of the alignment tape (F6-N8), then adjust the Height Adjustment Nut so that the output level of AC Voltmeter or waveform of oscilloscope is at maximum.

Note:

Fix the screw [C] with lock paint after readjustment.

1-E. X VALUE ADJUSTMENT

Purpose:

To adjust the Horizontal Position of the Audio Control Head.

Symptom of Misadjustment:

If the Horizontal Position of the Audio Control Head is not properly adjusted, maximum envelope can not be obtained at the Neutral Position of the Tracking Control Circuit.

1. Set the Tracking Control to the Neutral position.
2. Connect the oscilloscope to TP2 (ENV) on Main C.B.A. Use TP1 (RF-SW) as a Trigger.
3. Play back the Monoscope Portion of Alignment Tape (F6-N8) and confirm that the PB FM signal is output.
4. Adjust the X Value adjustment Nut so that the PB FM signal is at Maximum.

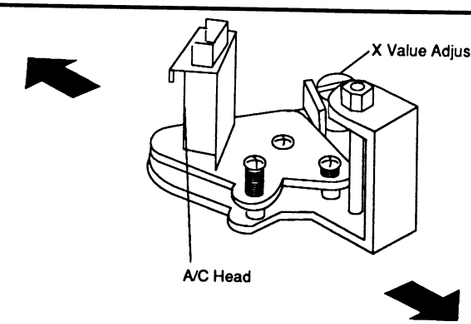

Fig. M9

1-F. CONFIRMATION/ADJUSTMENT OF ENVELOPE WAVEFORM

Purpose:

To achieve a satisfactory picture and secure precise tracking.

Symptom of Misadjustment :

If the envelope is output poorly, much noise will appear in the picture. Then the tracking will lose precision and the playback picture will be distorted by any slight variation of the Tracking Control.

1. Set the Tracking Control to the Neutral Position.
2. Connect the oscilloscope to TP2 (ENV) on Main C.B.A. Use TP1(RF-SW) as a Trigger.
3. Play back the Monoscope Portion of Alignment Tape(F6-N8). Adjust the height of Guide Rollers [2] and [3] watching scope display so that the envelope becomes as flat as possibile. If adjustment is required, turn the top of the Guide Roller with the Post Adjustment Screwdriver.
4. When the Scope Display is as shown in Fig. M10 adjust the height of [2] so that the waveform looks like Fig. M12.
5. When the Scope Display is as shown in Fig. M11 adjust the height of [3] so that the waveform looks like Fig. M12.
6. When [2] and [3] are adjusted properly, there is no Envelope Drop at the beginning and end of track as shown in Fig. M12.

Note:

After adjustment , confirm the X VALUE by pushing the Tracking Control Up or Down buttons alternately, to check the symmetry of the envelope. If required, perform "X VALUE ADJUSTMENT".

2. REPLACEMENT OF DRUM MOTOR

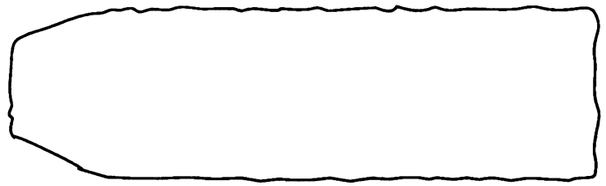

Fig. M10

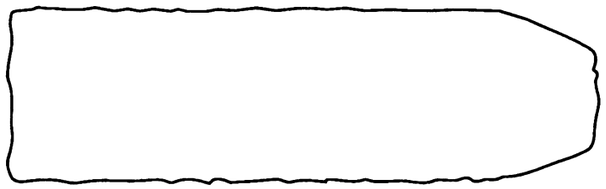

Fig. M11

Fig. M12

1. Disconnect the P.C.B. Assembly DM from the stator of DRUM MOTOR.
2. Remove the 2 Screws (S-1) and then take off the Rotor of DRUM MOTOR.
3. Remove 3 screws (S-2) and then take off the Stator of DRUM MOTOR.
4. Replace the Stator of DRUM MOTOR and then tighten 3 Screws (S-2).
5. Replace the Rotor of DRUM MOTOR and then install the 2 Screws (S-1).

Note:

To align the Roter with Lower Drum, refer to Fig. M15.

6. Connect the P.C.B. Assembly DM to the stator of DRUM MOTOR. (Refer to Fig. M13.)
   Upon completion of above procedure, confirm and adjust the following Items.
7. Play back Switching Point. (Refer to Electrical Adjustment.)
8. X Value. (Refer to Mechanical Adjustment Procedures Item 1-E.)

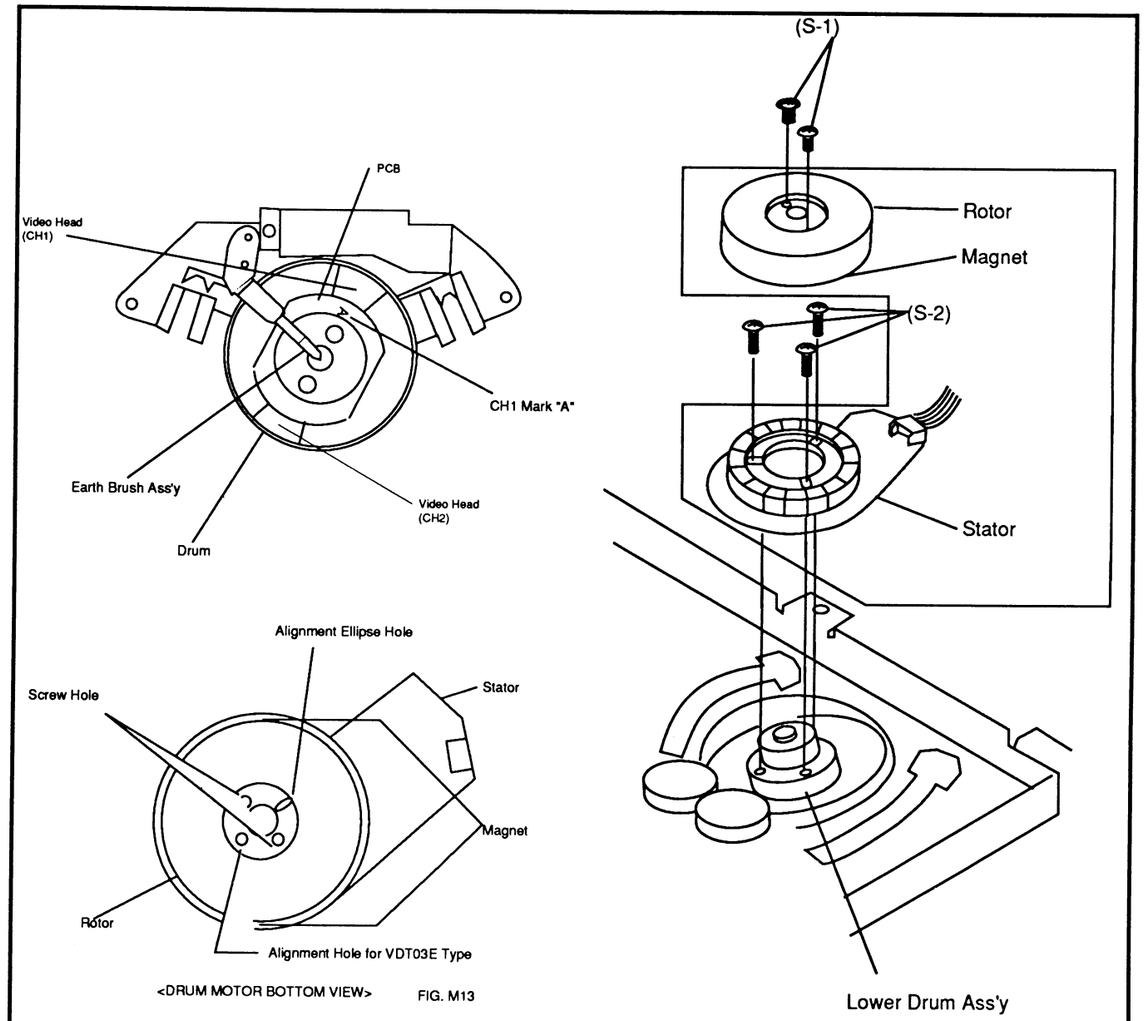

Fig. M13

REPLACEMENT OF CYLINDER ASSEMBLY

1. Disconnect the P.C.B. Ass'y DM form the stator of DRUM MOTOR.
2. Remove 3 screws (S-3) and then take off the CYLINDER ASSEMBLY.
3. Replace the Cylinder Assembly and then tighten 3 screws (S-3).
4. Connect the P.C.B. Ass'y DM to the CYLINDER ASSEMBLY. (Refer to Fig. M. 14)
   Upon completion of above Procedures confirm and adjust the following Items.
5. Play back Switching Point. (Refer to Electrical Adjustment.)
6. Azimuth
7. Audio Output Level
8. X Value
9. Envelope Waveform

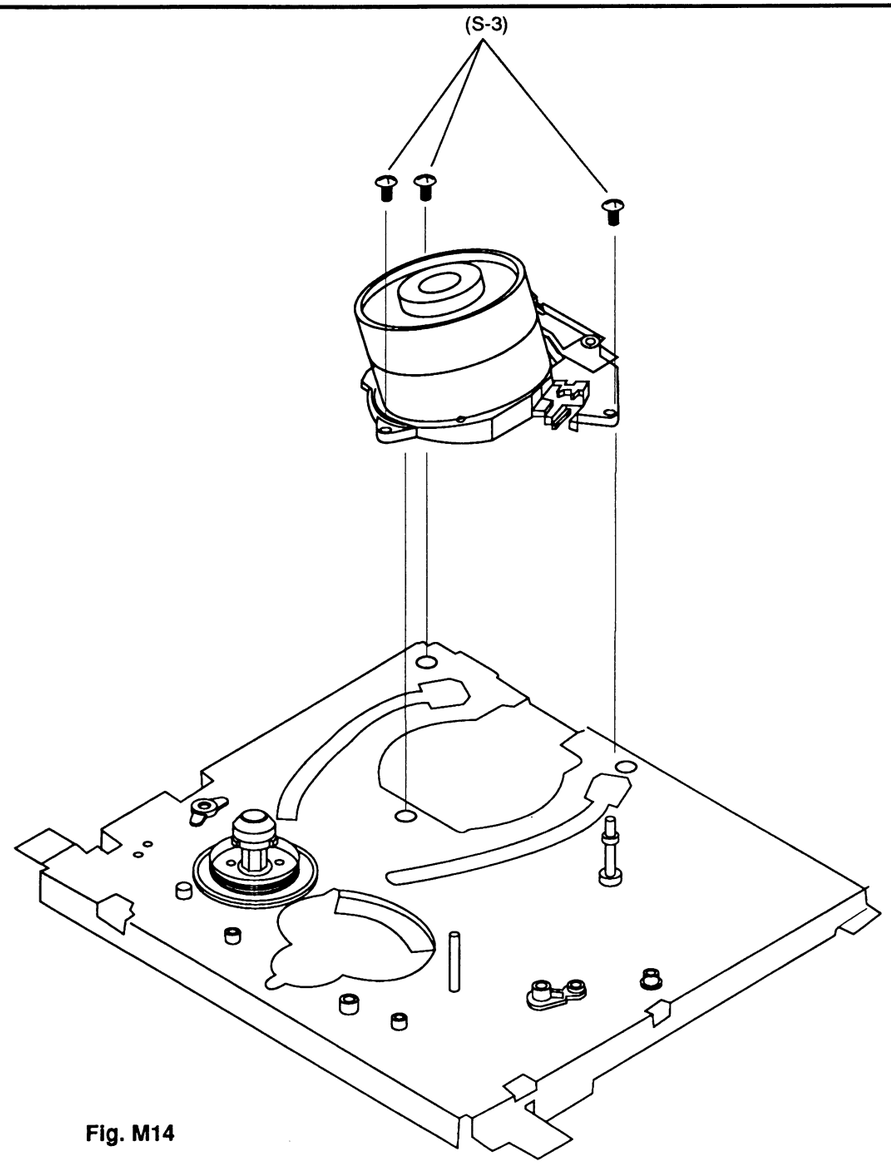

Fig. M14

REPLACEMENT OF UPPER DRUM/LOWER DRUM AND ROTOR

Replacement of Upper Drum

1. Remove Screw (S-4). Then take off the Blush Ass'y.
2. Remove Screws (S-5) and desolder on the Drum PCB shown in Fig. M15.
3. To reinstall reverse the above procedure, refering alignment method shown in Fig. M15.

Replacement of Lower Drum.

1. Remove Sylinder Assembly and Roter.
2. Remove Upper Drum from Lower Drum.

Note: 1. Use glove and do not touch the drum surface with bare fingers.
2. If the Video Head is defective, replace the Upper Drum.

When reinstall the Upper/Lower Drums, confirm and adjust the following Items :

- Switching Point (Refer to Electrical Asjustment)
- Azimuth (Refer to Item D on Mechanical Adjustment)
- Audio Output Level (Refer to Item D on Mechanical Adjustment)
- X Value (Refer to Item E on Mechanical Adjustment)

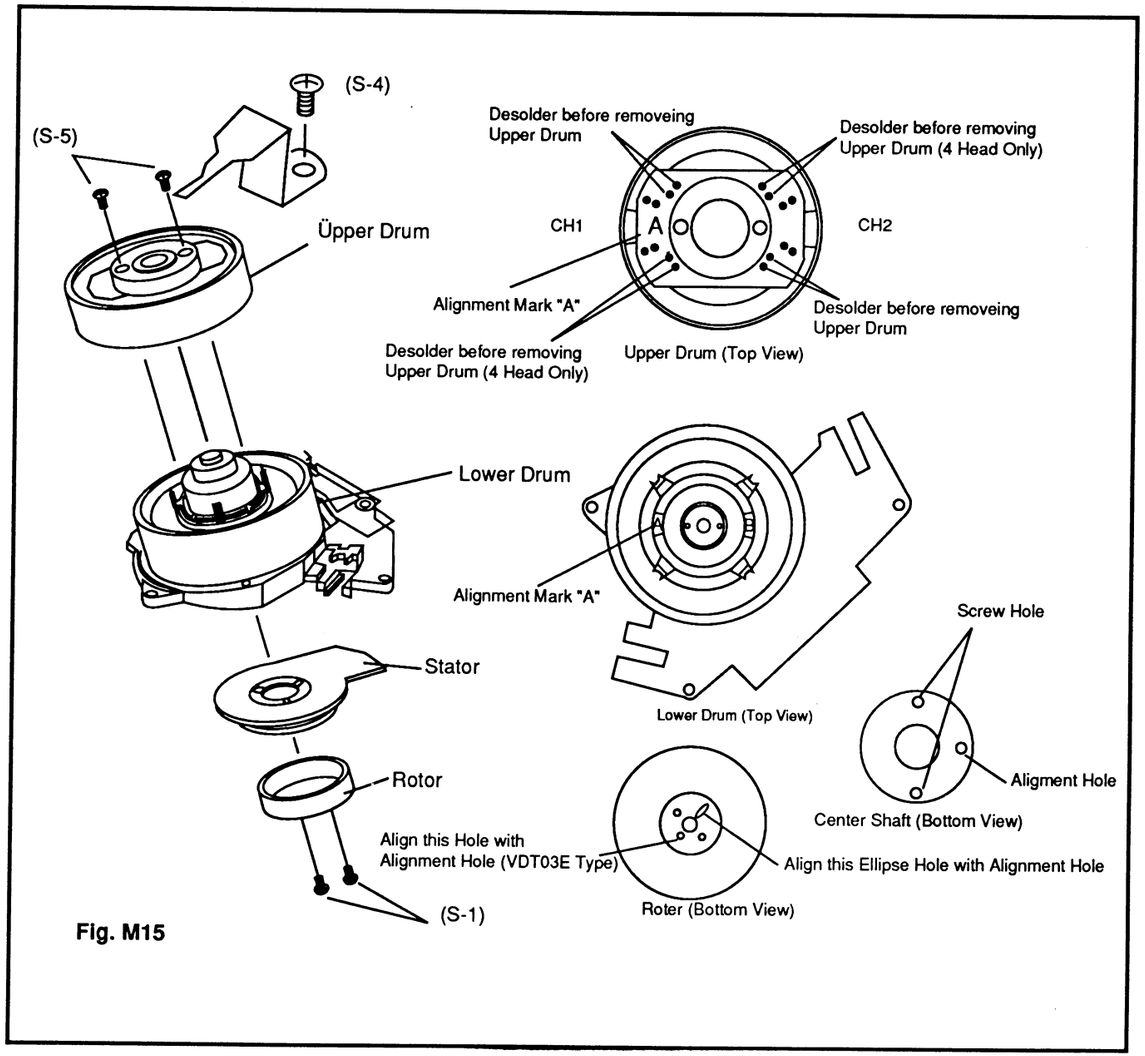

Fig. M15

SENSOR SCHEMATIC DIAGRAM

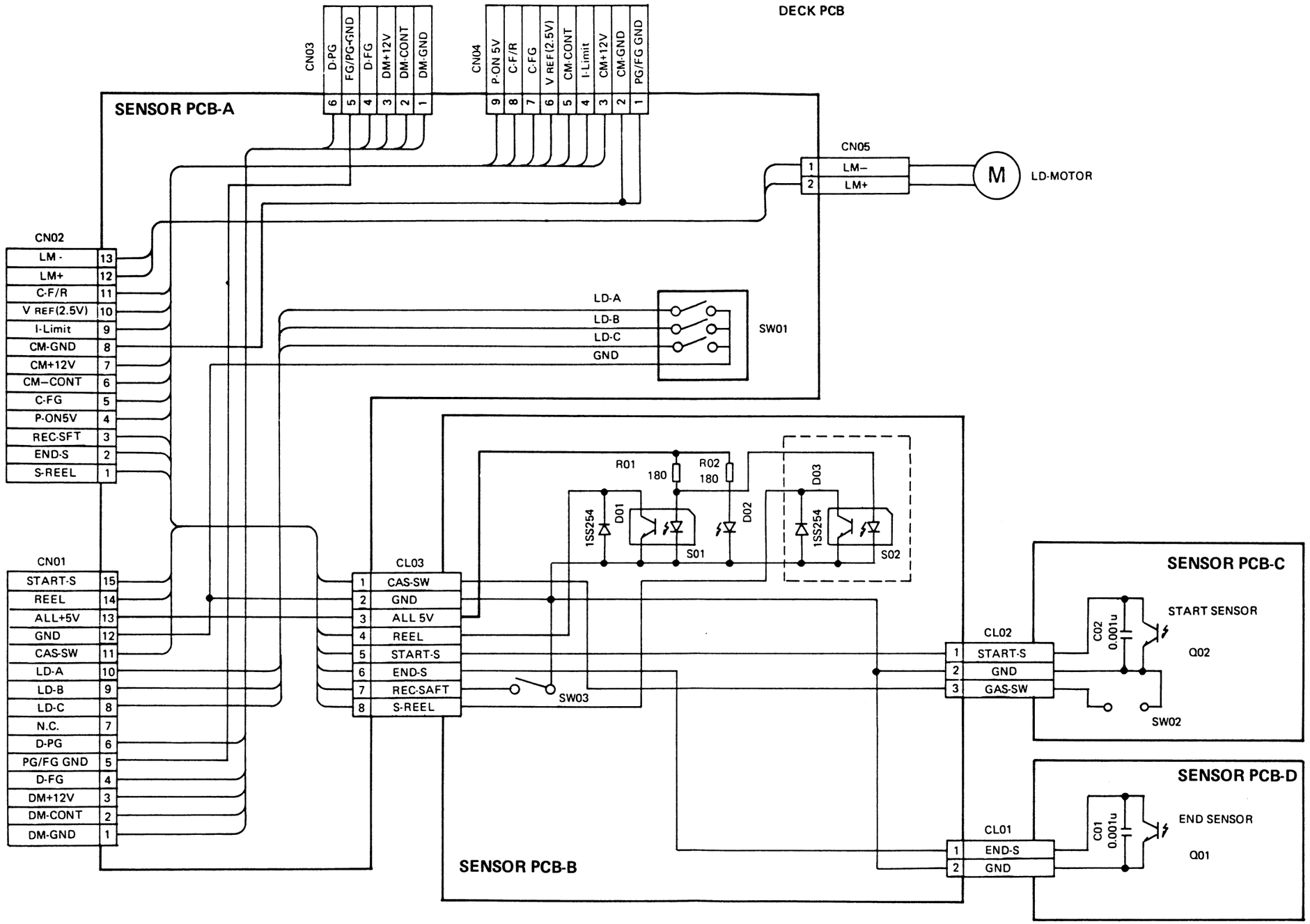

K6050-SCS

TAPE LEADER SCHEMATIC DIAGRAM

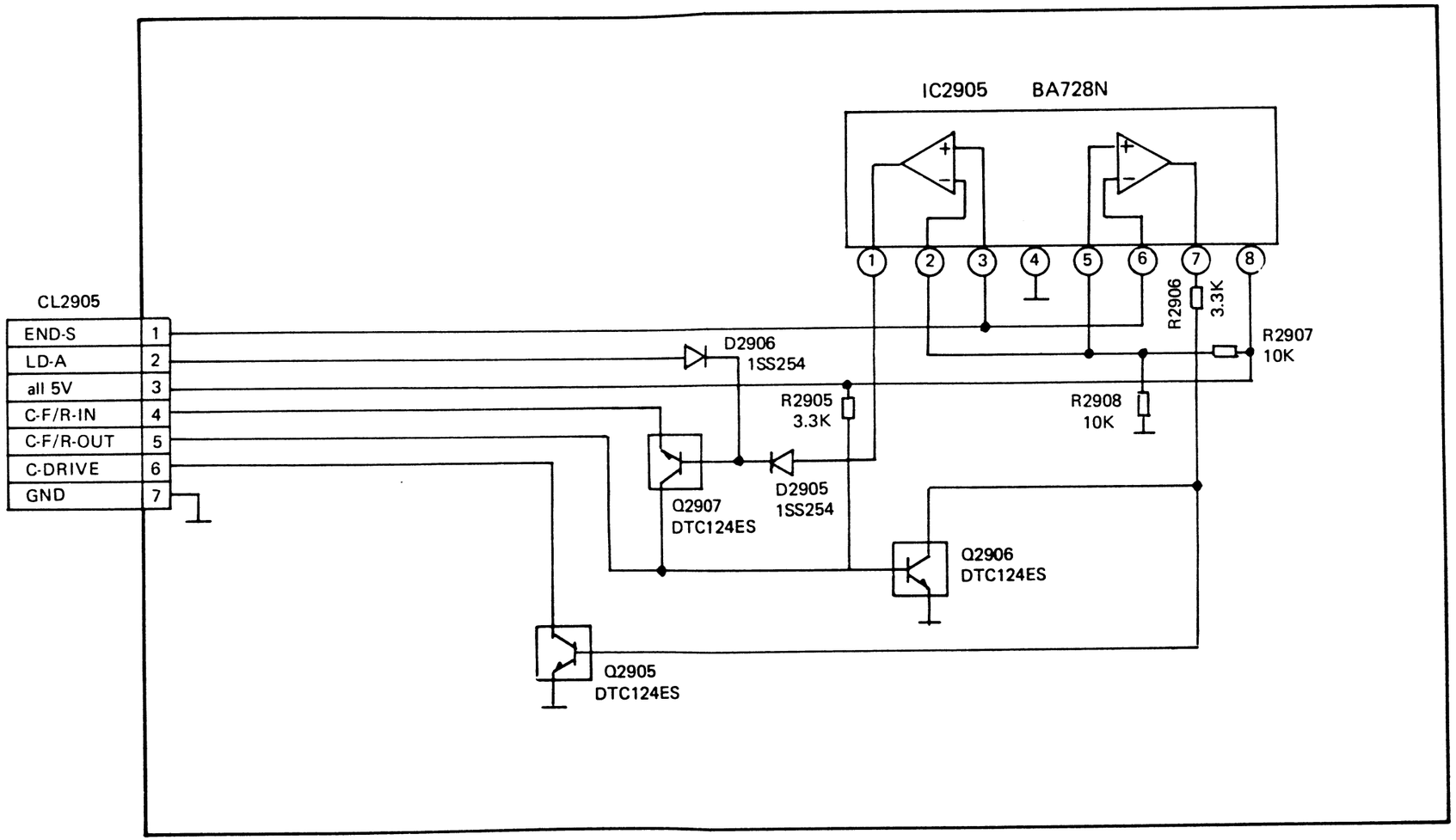

SENSOR-A PCB TOP VIEW

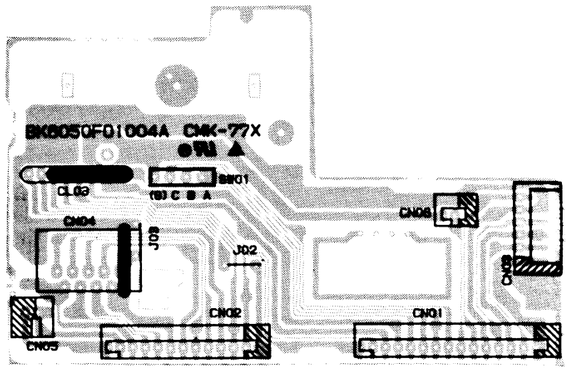

BK6050004A

SENSOR-B PCB TOP VIEW

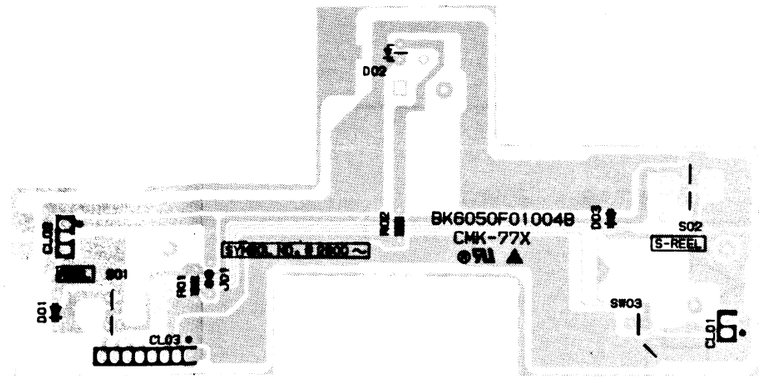

BK6050004B

SENSOR-C PCB TOP VIEW

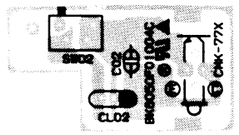

BK6050004C

SENSOR-D PCB TOP VIEW

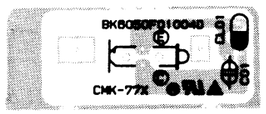

BK6050004D

TAPE LEADER PCB TOP VIEW

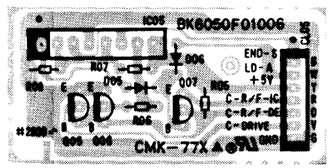

BK6050006

SERIAL NO. 1-40,000 ONLY

DRUM MOTOR PCB TOP VIEW

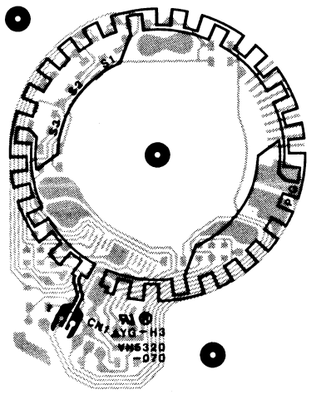

ACE HEAD PCB TOP VIEW

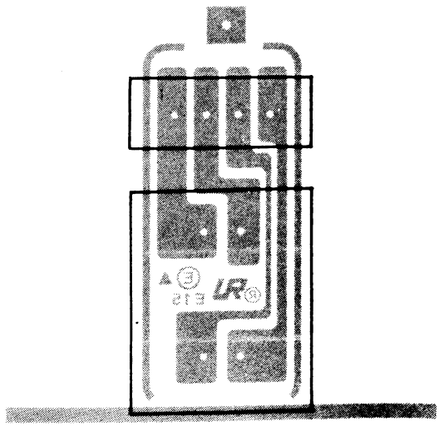

SENSOR-A PCB BOTTOM VIEW

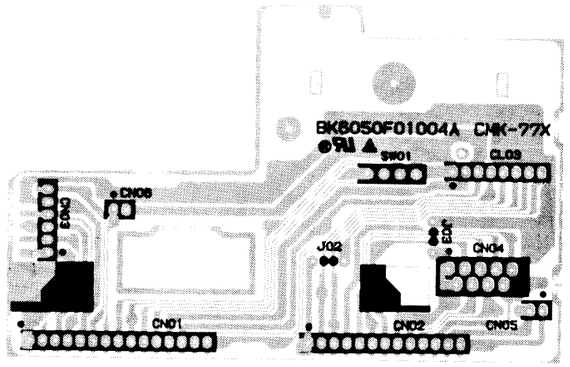

BK6050004A

SENSOR-B PCB BOTTOM VIEW

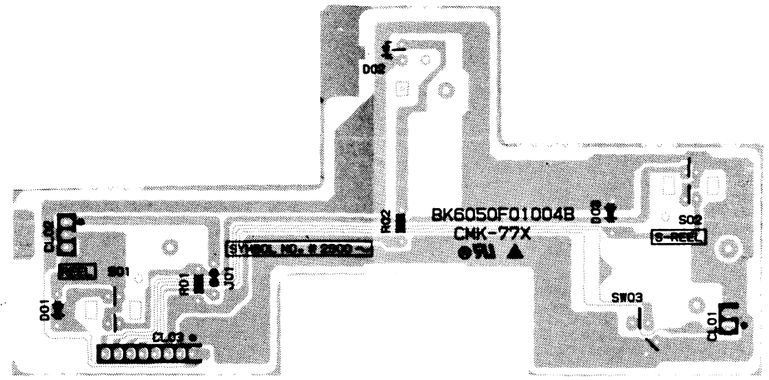

BK6050004B

SENSOR-C PCB BOTTOM VIEW

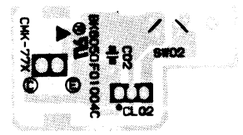

BK6050004C

SENSOR-D PCB BOTTOM VIEW

BK6050004D

TAPE LEADER PCB BOTTOM VIEW

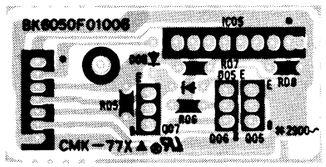

BK6050006

SERIAL NO. 1 - 40,000 ONLY

DRUM MOTOR PCB BOTTOM VIEW

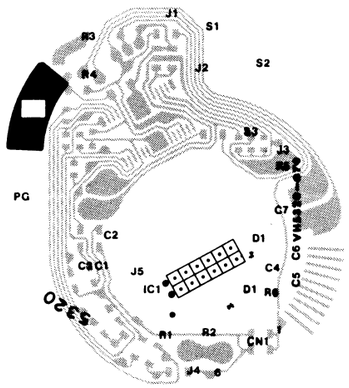

ACE HEAD PCB BOTTOM VIEW

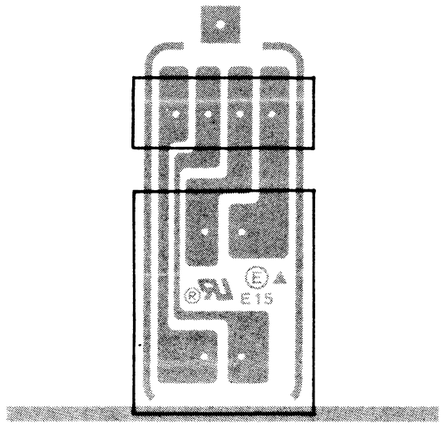

DECK EXPLODED VIEW (1)

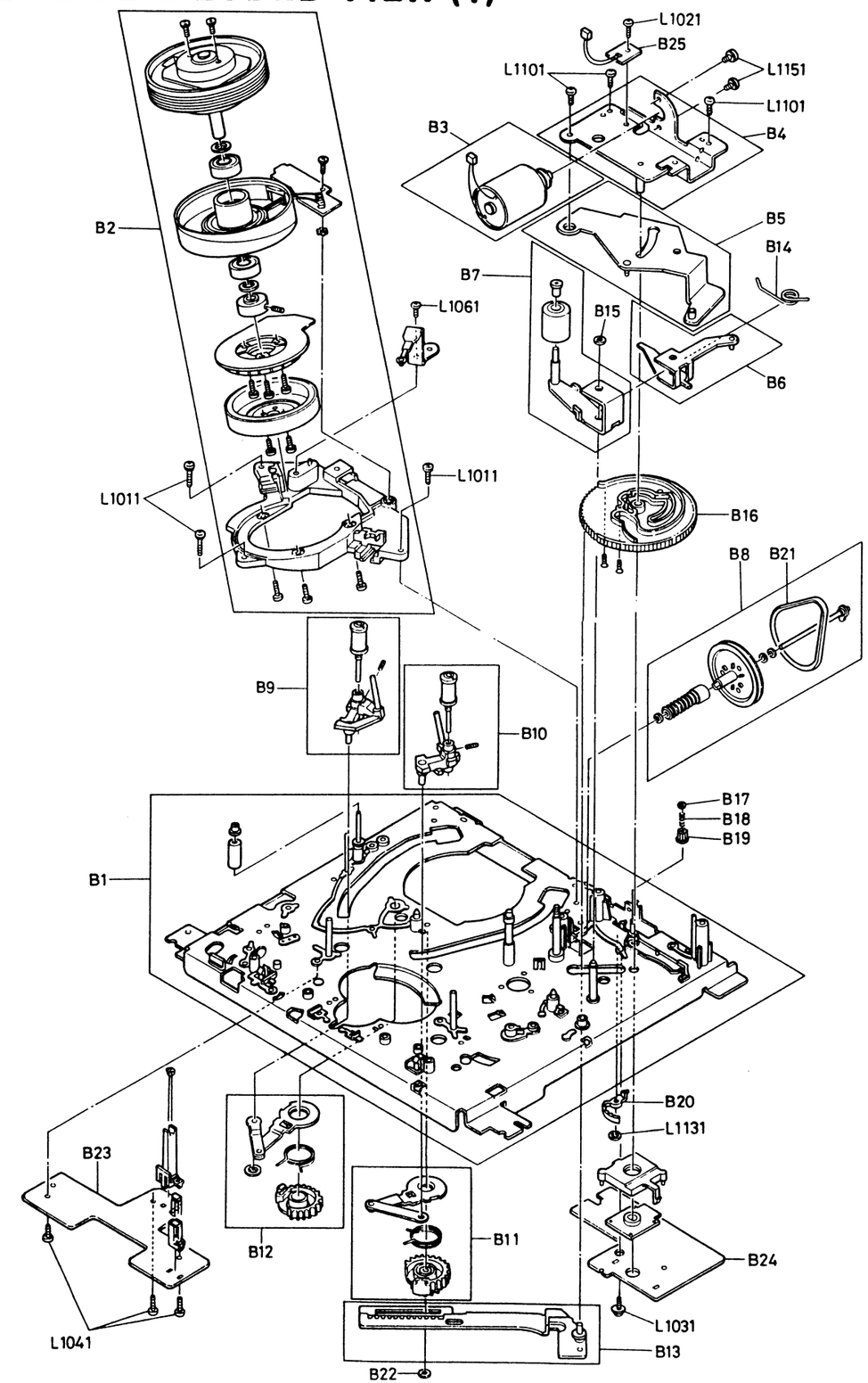

K6050EXP

DECK EXPLODED VIEW (2)

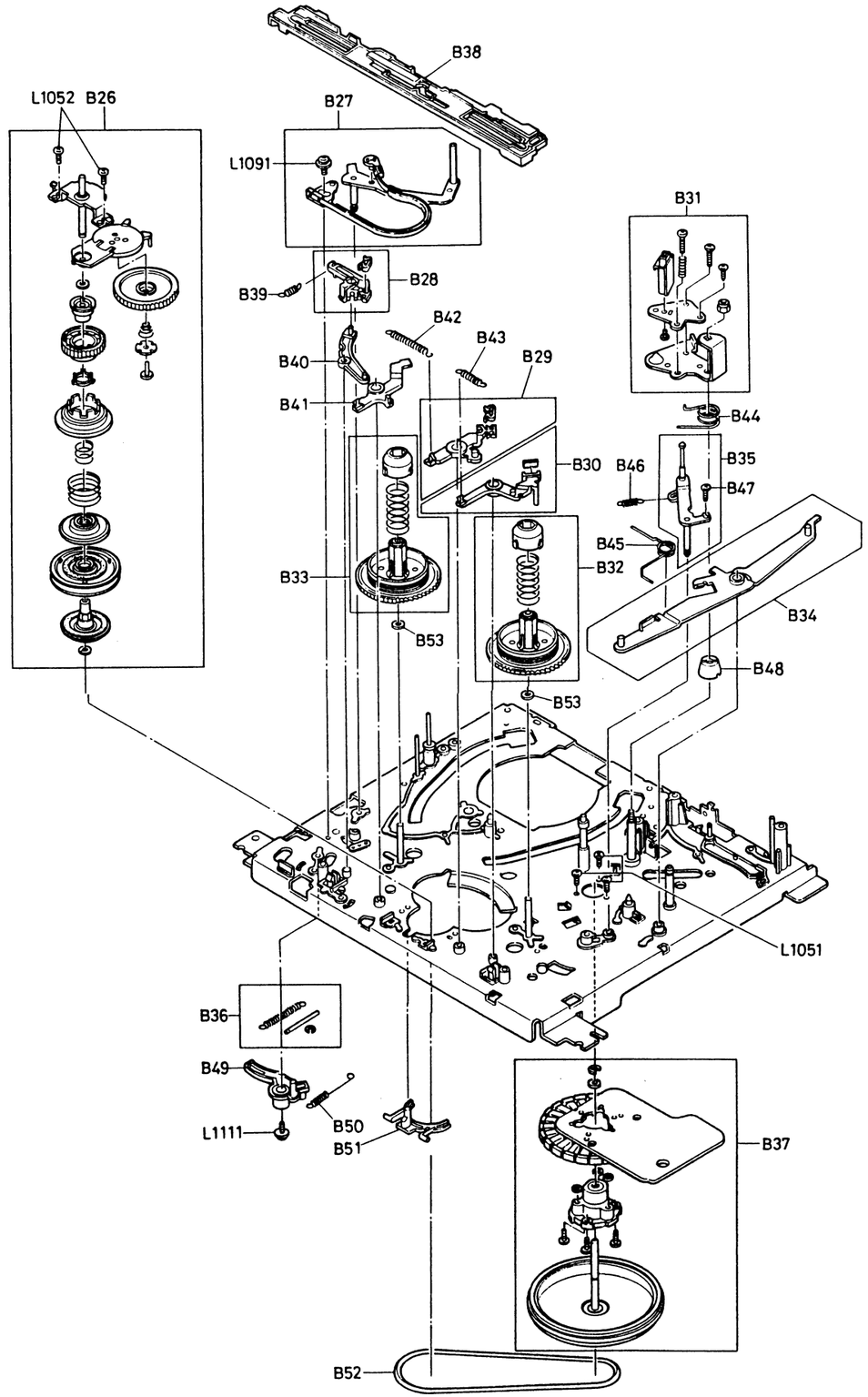

K6050EXP

DECK EXPLODED VIEW (3)

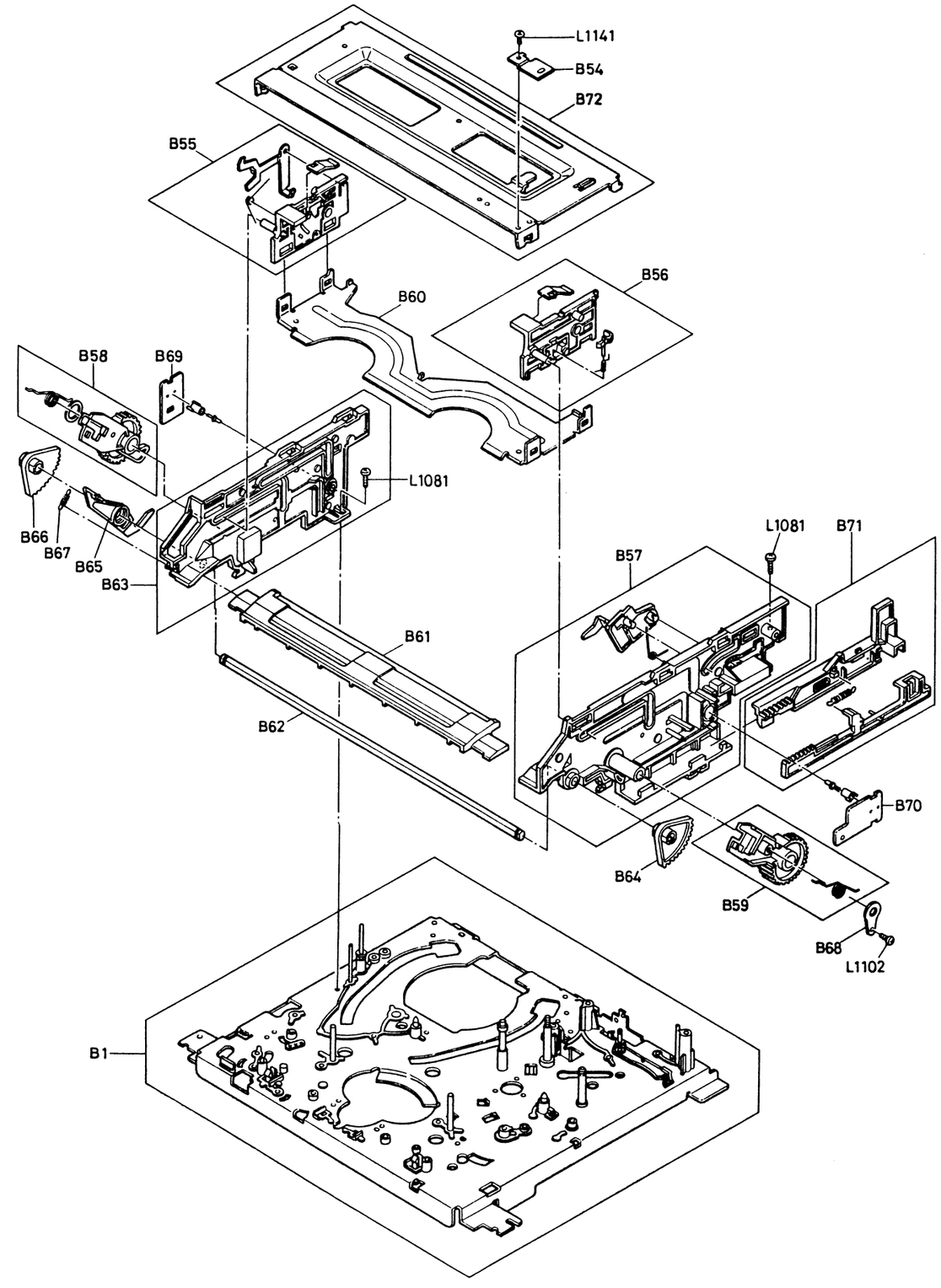

K6050EXP

DECK PARTS LIST

Ref.No.	Description	PartNo.
	DECK ASS'Y	N1110XA
B1	CHASSIS ASS'Y	0VM100198
B2	CYLINDER ASS'Y	0VM300930
B3	LOADING MOTOR PREPARATION	0VSA04200
B4	LOADING MOTOR HOLDER ASS'Y	0VSA04201
B5	CASSETTE DRIVE LEVR ASS'Y	0VM402564
B6	PINCH ROLLER ARM ASS'Y	0VM402563
B7	PINCH ARM ASS'Y	0VM402387
B8	PULLEY ASS'Y	0VSA04208
B9	MOVING GUIDE S ASS'Y	0VSA04237
B10	MOVING GUIDE T ASS'Y	0VSA04240
B11	LOADING ARM A ASS'Y	0VM403293
B12	LOADING ARM B ASS'Y	0VM403294
B13	LOADING ARM M ASS'Y	0VM402559
B14	PINCH ROLLER SPRING	0VM402565
B15	LUMIRROR WASHER 3.1X6X0.35	0VM403269
B16	CAM	0VM200683
B17	WASHER POLY G	0VM402898
B18	FRICTION GEAR SPRING	0VM402740
B19	FRICTION GEAR	0VM402661
B20	KICK ARM	0VM402662
B21	BELT LOADING	0VM402396
B22	WASHER POLY A	0VM402624
B23	REEL SENSER BLOCK	0VDM04801
B24	MODE SWITCH BLOCK	0VDM04802
B25	DEW SENSOR	PCZHUMZHH003
B25	DEW SENSOR	PCZHUMZM004S
B26	CLUTCH BLOCK ASS'Y	0VM300809
B27	BAND BRAKE ASS'Y	0VM403292
B28	MAIN BRAKE S ASS'Y	0VM402556
B29	MAIN BRAKE T ASS'Y	0VM402557
B30	T BRAKE ARM ASS'Y	0VM403296
B31	AC HEAD ASS'Y	0VSA04204
B32	REEL BASE ASS'Y(T)	0VM402776
B33	REEL BASE ASS'Y(S)	0VM402777
B34	MAIN LEVER ASS'Y	0VM402558
B35	TAPE GUIDE ASS'Y	0VM402560
B36	TENSION LEVER SP ASS'Y	0VSA04550
B37	CAPSTAN MOTOR F2QKB40	MMDDB5ZSJ001
B37	CAPSTAN MOTOR DFX-67B1VMA	MMDDB5ZMS002
B38	MODE CHANGE LEVER	0VM200684
B39	M BRAKE (S) SPRING	0VM402579
B40	M BRAKE (S) LEVER	0VM300753
B41	S BRAKE ARM	0VM300754
B42	M BRAKE T ARM SPRING	0VM402582
B43	T BRAKE SPRING	0VM402580
B44	SPRING HEAD HEIGHT	0VM402567
B45	M LEVER SPRING	0VM402570
B46	TAPE GUIDE ARM SPRING	0VM402581
B47	SCREW TAPE GUIDE ARM ADJ	0VM403242
B48	ADJUST NUT AC HEAD	0VM402481
B49	BT DRIVE ARM	0VM300756
B50	B.T DRIVING ARM SPRING	0VM402960
B51	CHANGE ARM	0VM402441
B52	BELT FWD	0VM402397
B53	WASHER POLY REEL HEIGHT ADJ	0VDM05187

Ref.No.	Description	PartNo.
B54	HOLDER F. L. TUBE	0VM402906
B55	C.SLIDER L ASS'Y	0VSA04487
B56	C.SLIDER R ASS'Y	0VSA04488
B57	C.GUIDE R ASS'Y	0VSA04490
B58	C.D. GEAR L ASS'Y	0VSA04494
B59	C.D. GEAR R ASS'Y	0VSA04495
B60	CASSETTE PLATE	0VM300779
B61	FRONT GUIDE	0VM300776
B62	GEAR CONNECTING SHAFT	0VM402506
B63	CASSETTE GUIDE L	0VM200689
B64	INTERLOCKING GEAR R	0VM300786
B65	FRONT DOOR OPENER	0VM300781
B66	INTERLOCKING GEAR L	0VM300787
B67	FRONT DOOR OPENER SPRING	0VM402509
B68	REINFORCEMENT PLATE DRIVING GEAR	0VM402961
B69	END SENSER ASS'Y	0VDM04804
B70	START SENSER ASS'Y	0VDM04803
B71	RACK ASS'Y	0VSA04496
B72	UPPER PLATE ASS'Y	0VM301216
L1011	SCREW SEMS M3X9 PAN HEAD+	CPM33090
L1021	SCREW S-TIGHT 3X4 BIND+	GBMS3040
L1031	SCREW P-TIGHT 2.6X6 CUP HEAD +	GCMP9060
L1041	SCREW P-TIGHT 2.6X6 PAN HEAD +	GPMP9060
L1051	SCREW S-TIGHT M2.6X6 PAN HEAD +	GPMS9060
L1052	SCREW S-TIGHT M2.6X6 PAN HEAD +	GPMS9060
L1061	SCREW S-TIGHT M2.6X6 PAN HEAD +	GPMS9060
L1071	P TIGHT SCREW 3X8 PAN HEAD +	GPMP3080
L1081	SCREW S-TIGHT BIND HEAD 3X6	GBMS3060
L1091	S TIGHT SCREW M3X6 CUP+	GCMS3060
L1101	P TIGHT SCREW 3X8 BIND+	GBMP3080
L1102	P TIGHT SCREW 3X8 BIND+	GBMP3080
L1111	P TIGHT SCREW M3X6 CUP+	GCMP3060
L1121	SCREW HEX CUP M3	NHMN030
L1131	CS RING (D=2)	WTM2063
L1141	S TIGHT SCREW M3X5	GDMS3050
L1151	SCREW SEMS M3X4 PAN HEAD +	CPM33040
L1161	SCREW STOPPER M2X4	SGK52040
L1162	SCREW STOPPER M2X4	SGK52040
L1171	P TIGHT SCREW 3X6 PAN HEAD +	GPMP3060

N1110AX