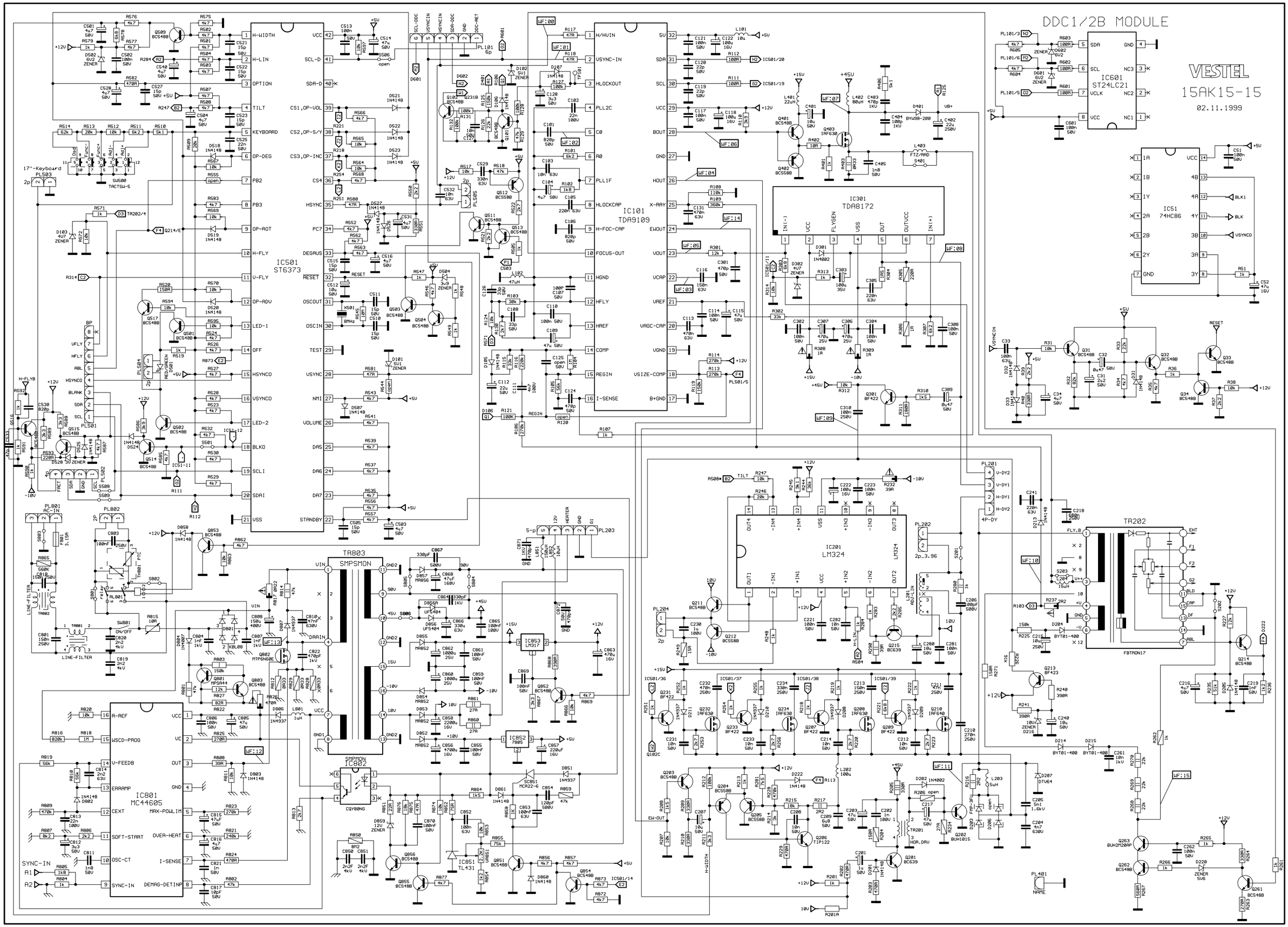
DDC1/2B MODULE
VESTEL
15AK15-15
02.11.1999
IC501
ST6373
IC101
TDA9109
IC301
TDA8172
IC601
ST24LC21
IC51
74HC86
IC201
LM324
TR803
SMPSMON
IC801
MC44605
IC802
CQY80NG
TR202
FBTMON17
17"-Keyboard
PL503
SW500
TACTSW-5
LINE-FILTER
SYNC-IN
A1
A2
PL401
NAME