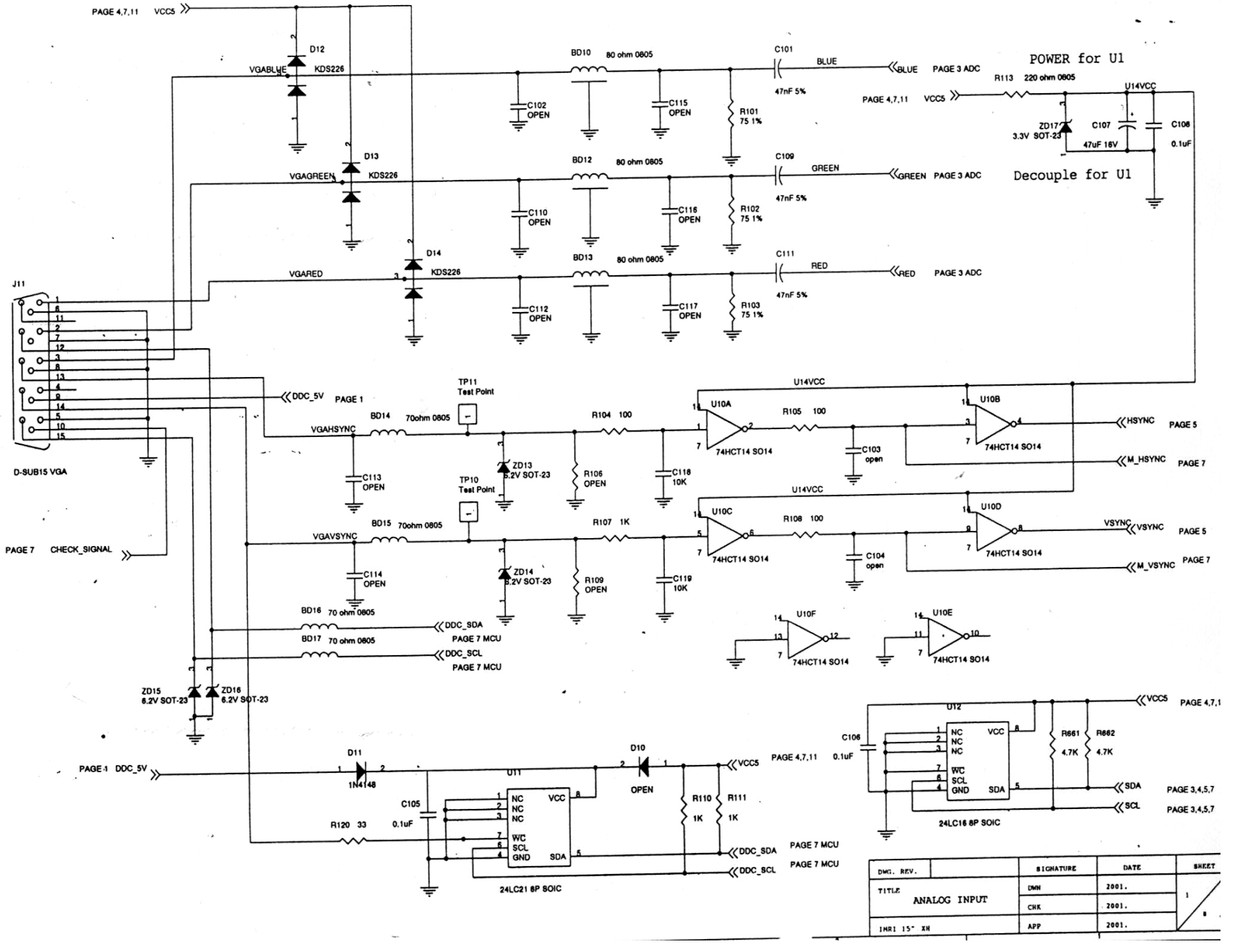
PAGE 4,7,11 VCC5
D12
KDS226
VGABLUE
D13
KDS226
VGAGREEN
D14
KDS226
VGARED
BD10 80 ohm 0805
BD12 80 ohm 0805
BD13 80 ohm 0805
C101
47nF 5%
BLUE
BLUE PAGE 3 ADC
C109
47nF 5%
GREEN
GREEN PAGE 3 ADC
C111
47nF 5%
RED
RED PAGE 3 ADC
C102 OPEN
C115 OPEN
R101 75 1%
C110 OPEN
C116 OPEN
R102 75 1%
C112 OPEN
C117 OPEN
R103 75 1%
POWER for U1
R113 220 ohm 0805
U14VCC
ZD17 3.3V SOT-23
C107 47uF 16V
C108 0.1uF
Decouple for U1
J11
D-SUB15 VGA
DDC_5V PAGE 1
TP11 Test Point
TP10 Test Point
BD14 70ohm 0805
VGAHSYNC
BD15 70ohm 0805
VGAVSYNC
C113 OPEN
C114 OPEN
ZD13 6.2V SOT-23
ZD14 6.2V SOT-23
R106 OPEN
R109 OPEN
R104 100
R107 1K
C118 10K
C119 10K
U10A
U10B
U10C
U10D
U10E
U10F
74HCT14 SO14
R105 100
R108 100
C103 open
C104 open
HSYNC PAGE 5
M_HSYNC PAGE 7
VSYNC PAGE 5
M_VSYNC PAGE 7
PAGE 7 CHECK_SIGNAL
BD16 70 ohm 0805
BD17 70 ohm 0805
DDC_SDA PAGE 7 MCU
DDC_SCL PAGE 7 MCU
ZD15 6.2V SOT-23
ZD16 6.2V SOT-23
PAGE 1 DDC_5V
D11 1N4148
D10 OPEN
C105 0.1uF
R120 33
U11
NC
VCC
WC
SCL
GND
SDA
24LC21 8P SOIC
R110 1K
R111 1K
VCC5
PAGE 4,7,11
DDC_SDA PAGE 7 MCU
DDC_SCL PAGE 7 MCU
U12
C106 0.1uF
R661 4.7K
R662 4.7K
SDA PAGE 3,4,5,7
SCL PAGE 3,4,5,7
24LC16 8P SOIC
DWG. REV.
SIGNATURE
DATE
SHEET
TITLE
ANALOG INPUT
DWN 2001.
CHK 2001.
APP 2001.
IMRI 15" XH
1
8

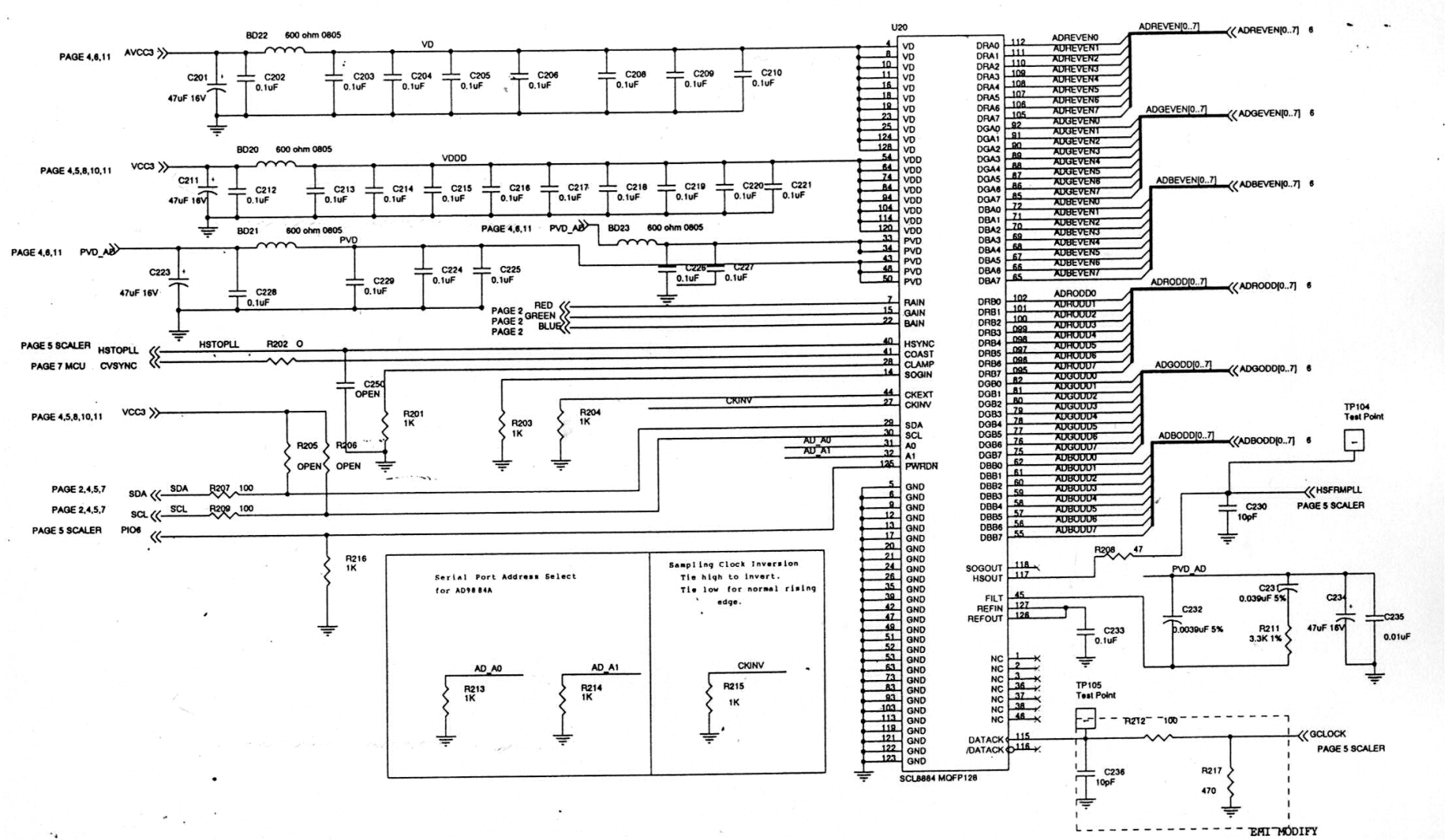

DWG. REV.		SIGNATURE	DATE	SHEET
TITLE SCL8884-100		DWN	2001.	2
		CHK	2001.	
		APP	2001.	

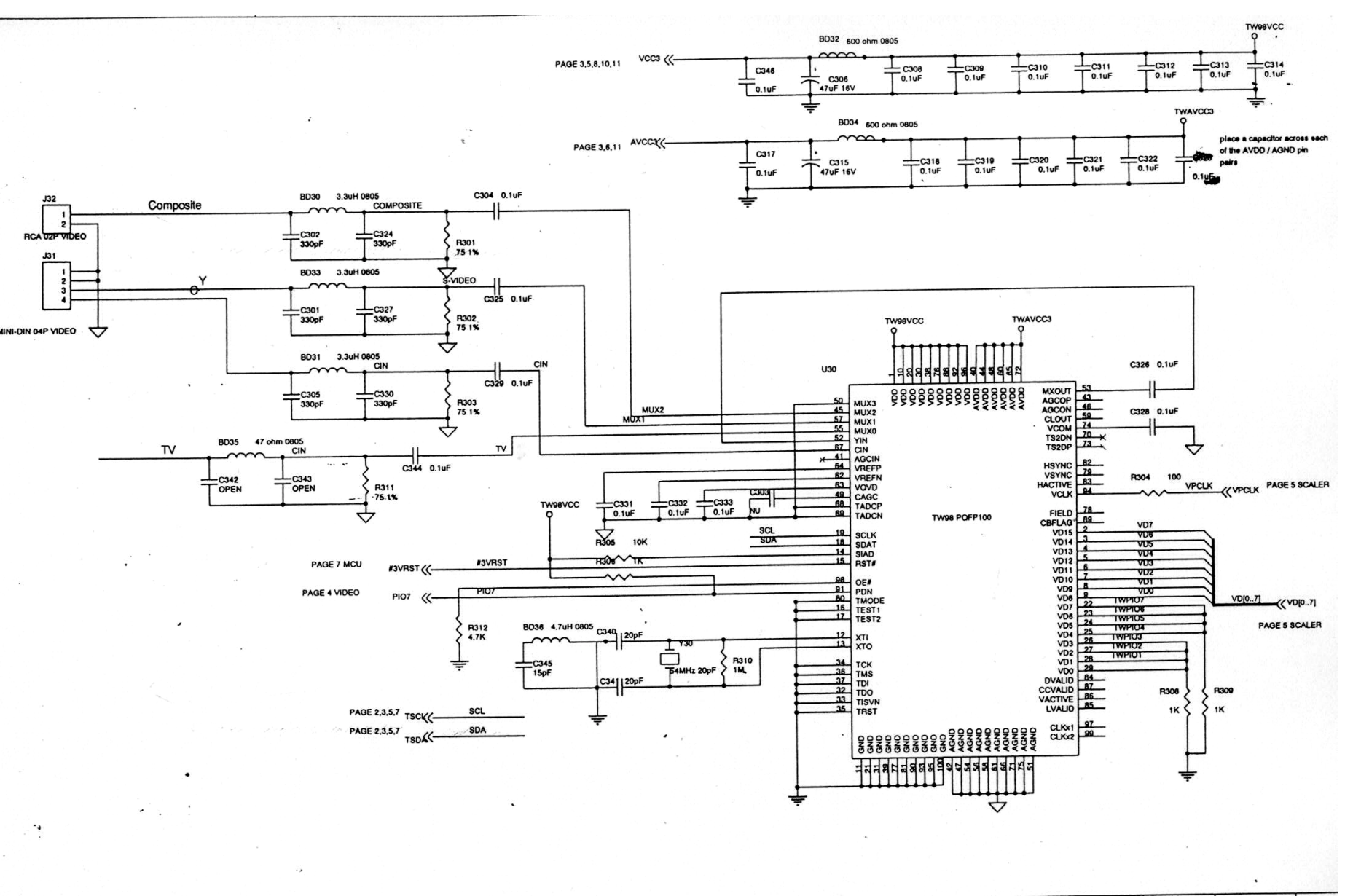

DWG. REV.		SIGNATURE	DATE	SHEET
TITLE	TW98-AAPE	DWN	2001.	3
		CHK	2001.	

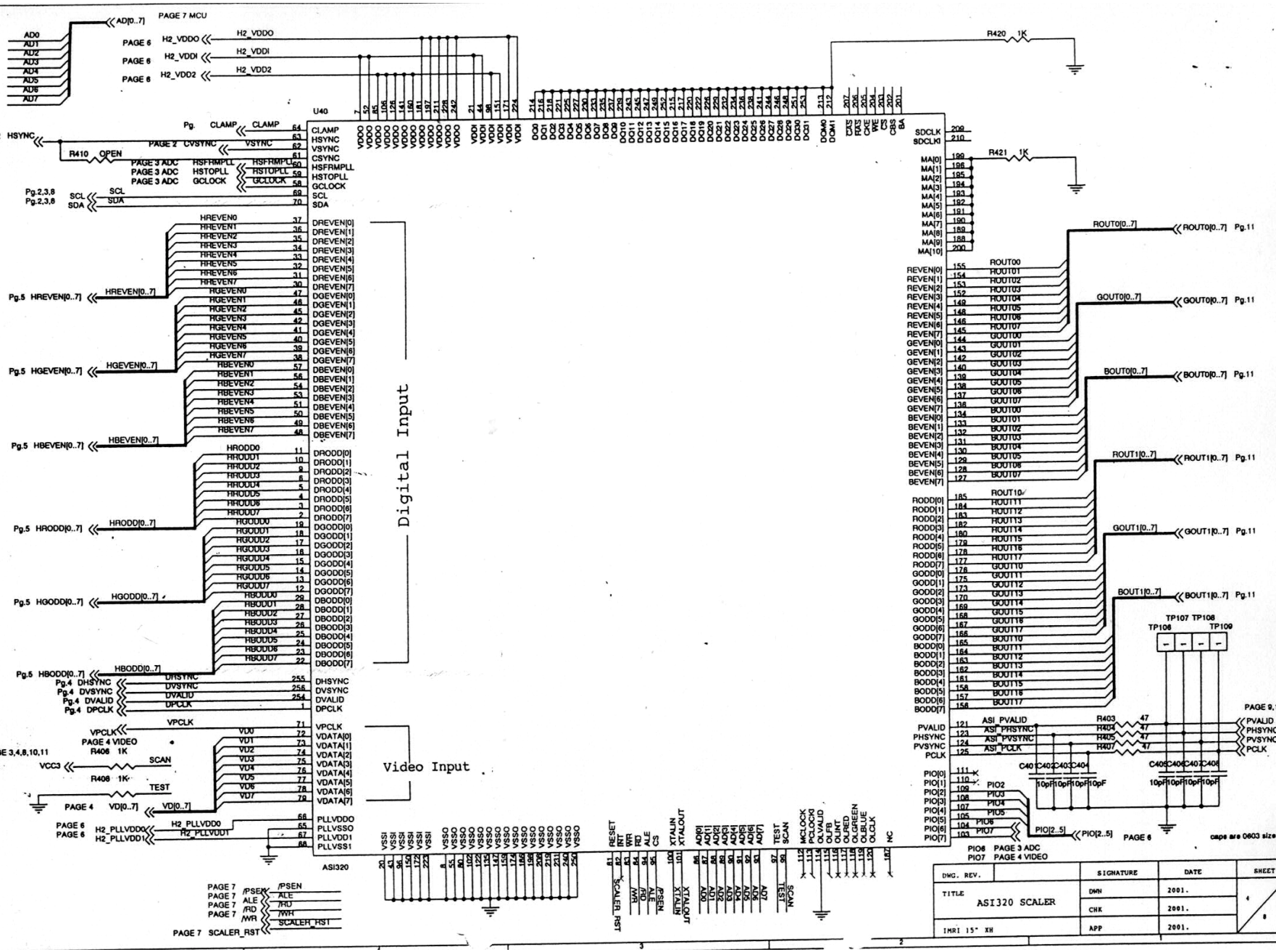
PAGE 7 MCU
U40
ASI320
Digital Input
Video Input
R420 1K
R421 1K
R410 OPEN
R406 1K
R408 1K
R403 47
R404 47
R405 47
R407 47
C401 10pF
C402 10pF
C403 10pF
C404 10pF
C405 10pF
C406 10pF
C407 10pF
C408 10pF
TP107 TP108
TP106 TP109
caps are 0603 size
DWG. REV.
SIGNATURE
DATE
SHEET
TITLE
ASI320 SCALER
DWN 2001.
CHK 2001.
APP 2001.
IMRI 15" XH
4
8

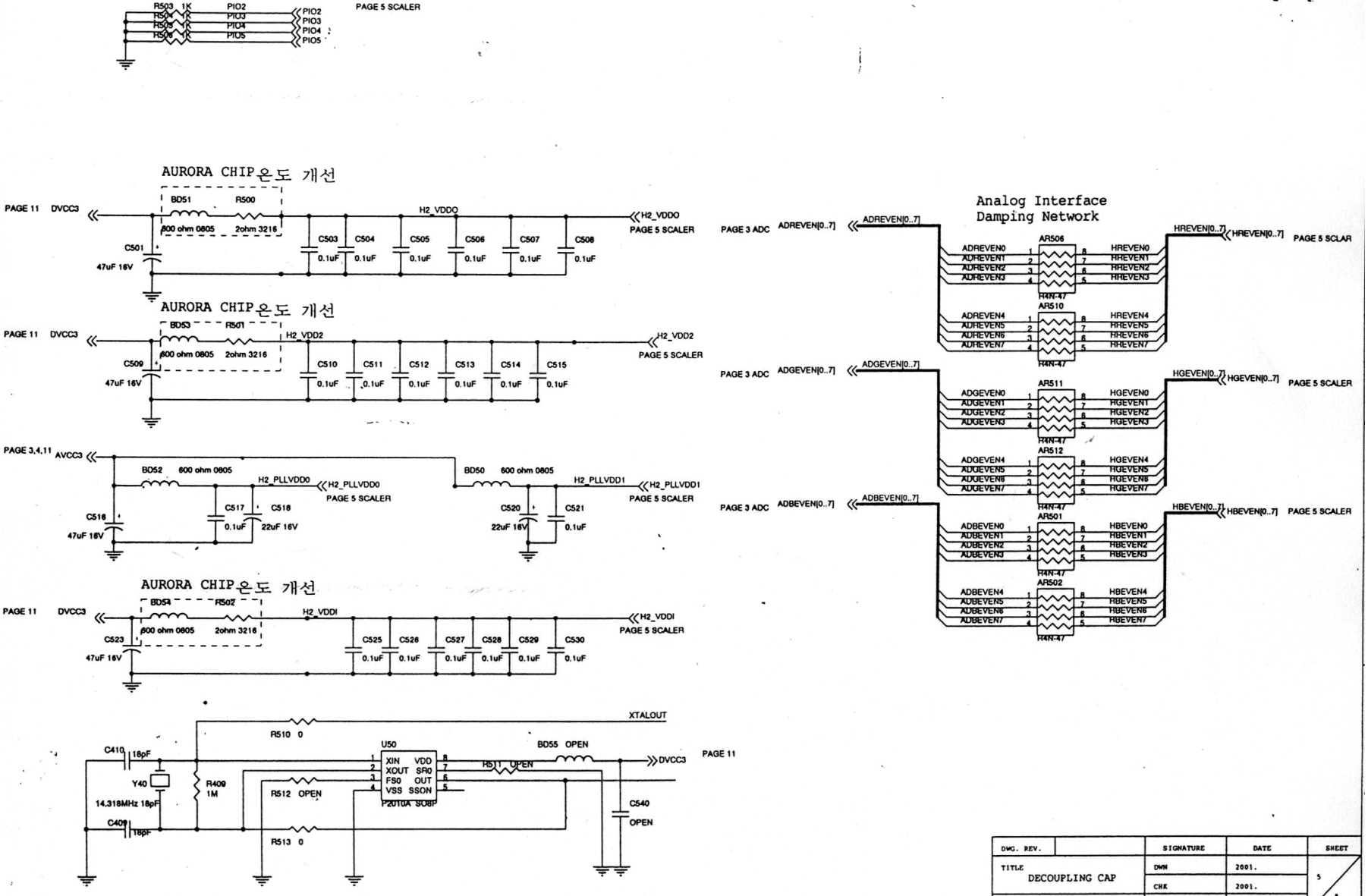
R503 1K PIO2
R504 1K PIO3
R505 1K PIO4
R506 1K PIO5
PIO2
PIO3
PIO4
PIO5
PAGE 5 SCALER
AURORA CHIP온도 개선
PAGE 11 DVCC3
BD51 R500
600 ohm 0805 2ohm 3216
H2_VDDO
H2_VDDO
PAGE 5 SCALER
C501
47uF 16V
C503 C504 C505 C506 C507 C508
0.1uF
AURORA CHIP온도 개선
PAGE 11 DVCC3
BD53 R501
600 ohm 0805 2ohm 3216
H2_VDD2
H2_VDD2
PAGE 5 SCALER
C509
47uF 16V
C510 C511 C512 C513 C514 C515
0.1uF
PAGE 3,4,11 AVCC3
BD52 600 ohm 0805
H2_PLLVDD0
H2_PLLVDD0
PAGE 5 SCALER
C516
47uF 16V
C517 C518
0.1uF 22uF 16V
BD50 600 ohm 0805
H2_PLLVDD1
H2_PLLVDD1
PAGE 5 SCALER
C520 C521
22uF 16V 0.1uF
AURORA CHIP온도 개선
PAGE 11 DVCC3
BD54 R502
600 ohm 0805 2ohm 3216
H2_VDDI
H2_VDDI
PAGE 5 SCALER
C523
47uF 16V
C525 C526 C527 C528 C529 C530
0.1uF
XTALOUT
R510 0
C410 18pF
Y40
14.318MHz 18pF
C409 18pF
R409 1M
U50
XIN VDD
XOUT SR0
FS0 OUT
VSS SSON
P2010A SO8P
BD55 OPEN
R511 OPEN
DVCC3
PAGE 11
R512 OPEN
R513 0
C540
OPEN
Analog Interface
Damping Network
PAGE 3 ADC ADREVEN[0..7]
ADREVEN[0..7]
AR506
ADREVEN0 ADREVEN1 ADREVEN2 ADREVEN3
HREVEN0 HREVEN1 HREVEN2 HREVEN3
H4N-47
AR510
ADREVEN4 ADREVEN5 ADREVEN6 ADREVEN7
HREVEN4 HREVEN5 HREVEN6 HREVEN7
HREVEN[0..7]
HREVEN[0..7]
PAGE 5 SCLAR
PAGE 3 ADC ADGEVEN[0..7]
ADGEVEN[0..7]
AR511
ADGEVEN0 ADGEVEN1 ADGEVEN2 ADGEVEN3
HGEVEN0 HGEVEN1 HGEVEN2 HGEVEN3
AR512
ADGEVEN4 ADGEVEN5 ADGEVEN6 ADGEVEN7
HGEVEN4 HGEVEN5 HGEVEN6 HGEVEN7
HGEVEN[0..7]
HGEVEN[0..7]
PAGE 5 SCALER
PAGE 3 ADC ADBEVEN[0..7]
ADBEVEN[0..7]
AR501
ADBEVEN0 ADBEVEN1 ADBEVEN2 ADBEVEN3
HBEVEN0 HBEVEN1 HBEVEN2 HBEVEN3
AR502
ADBEVEN4 ADBEVEN5 ADBEVEN6 ADBEVEN7
HBEVEN4 HBEVEN5 HBEVEN6 HBEVEN7
HBEVEN[0..7]
HBEVEN[0..7]
PAGE 5 SCALER
DWG. REV.
SIGNATURE
DATE
SHEET
TITLE
DECOUPLING CAP
DWN 2001.
CHK 2001.
APP 2001.
5
8

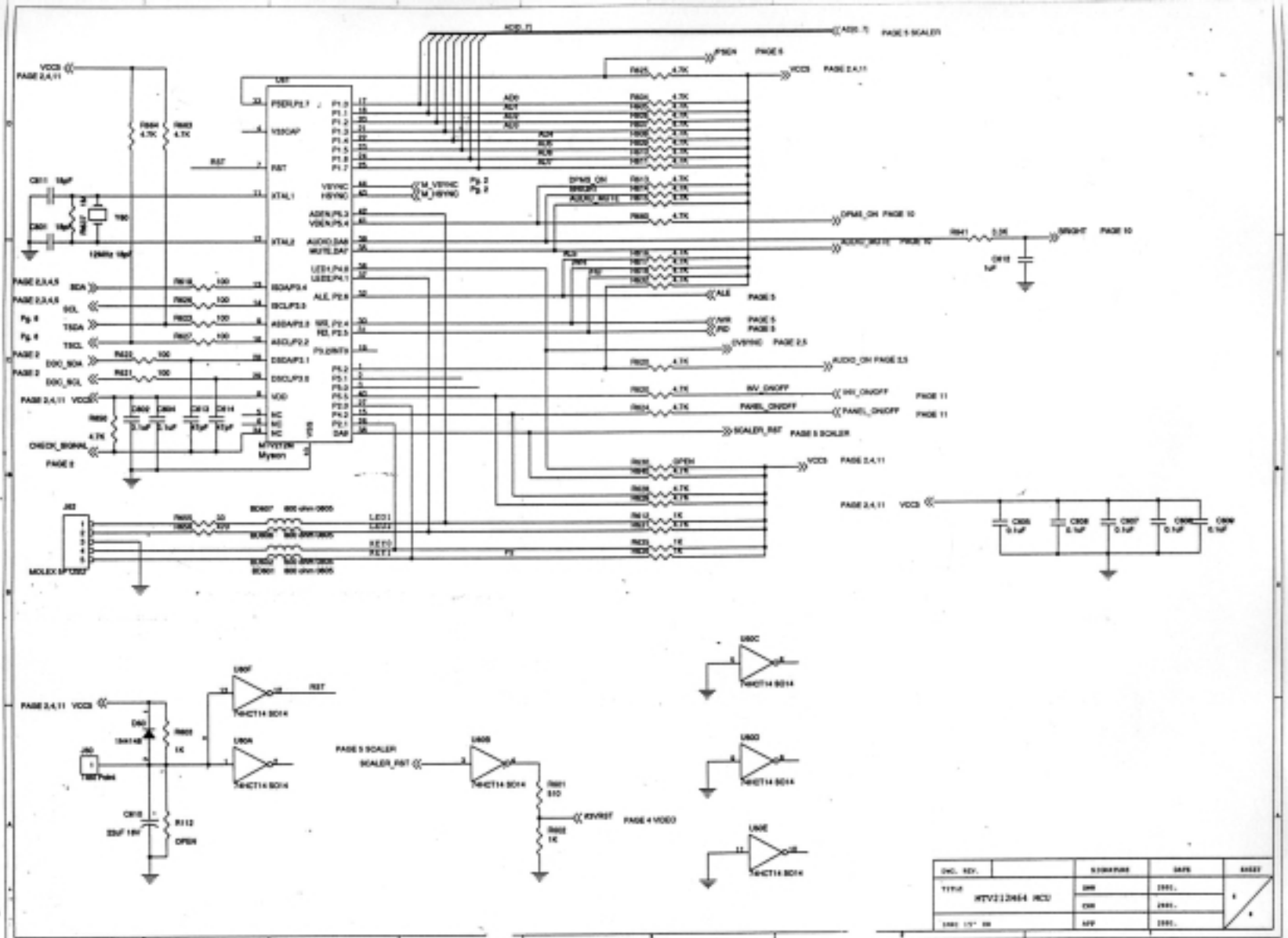

CHG. REV.		SIGNATURE	DATE	SHEET
TITLE	MTV212M64 MCU	DRN	2001.	5 / 6
		CHK	2001.	
SIZE 17" X8		APP	2001.	

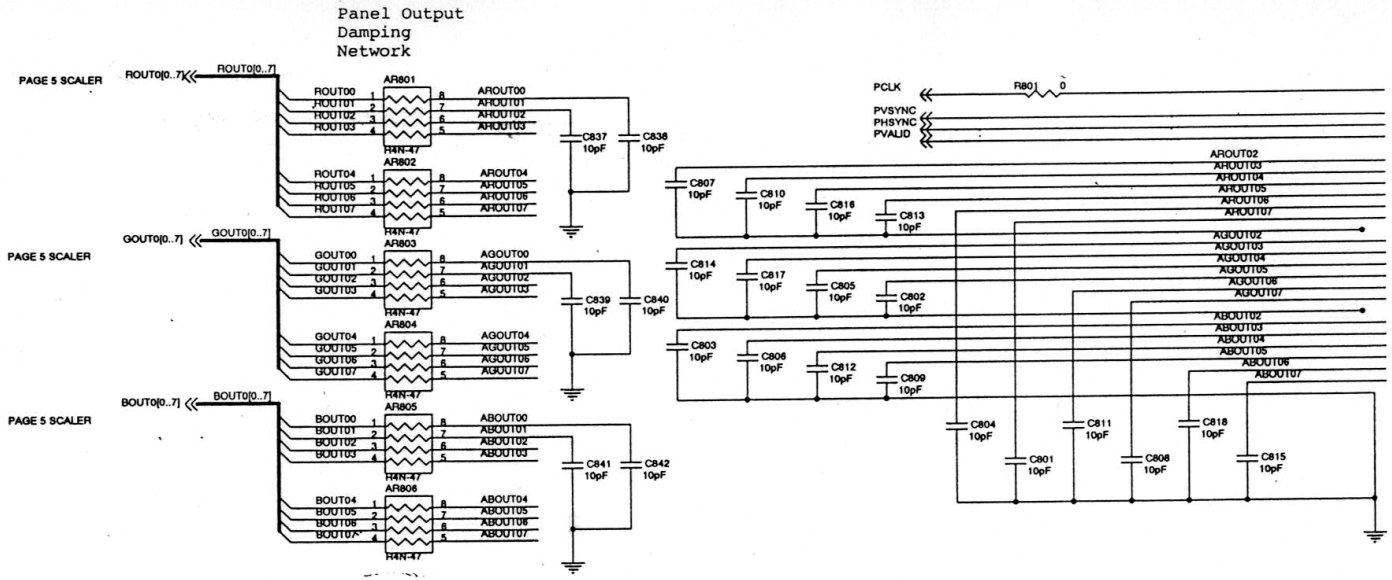

LVDS

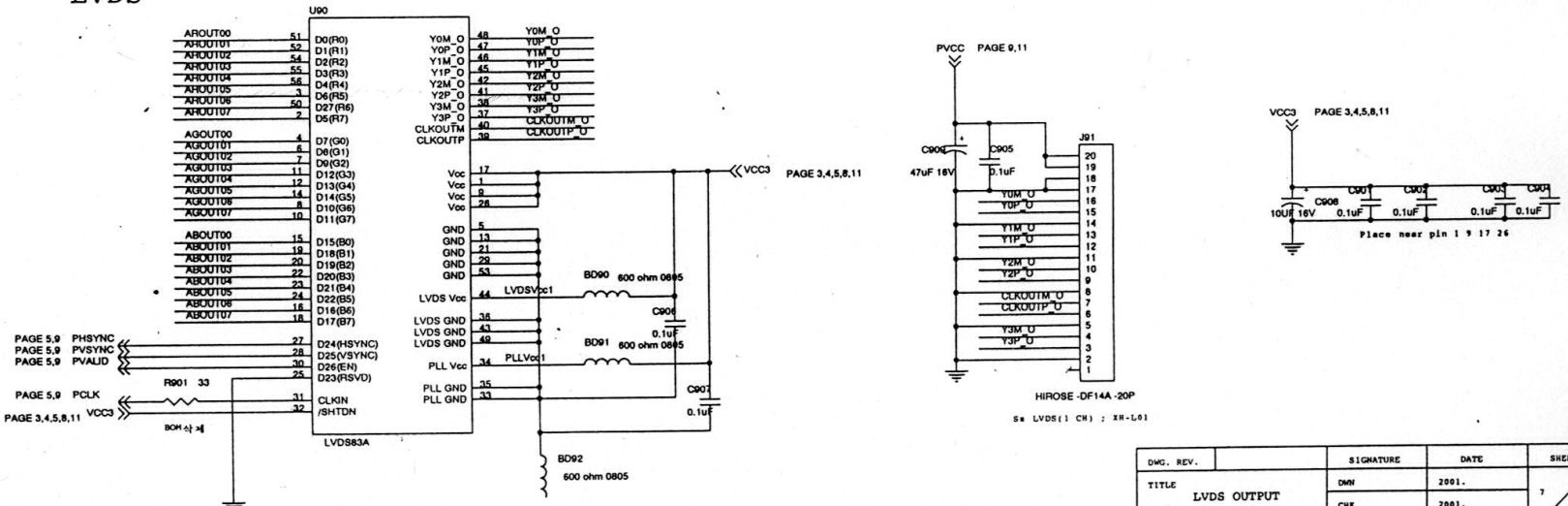

DWG. REV.		SIGNATURE	DATE	SHEET
TITLE	LVDS OUTPUT	DWN	2001.	7 / 8
		CHK	2001.	
IMRI 15" XH		APP	2001.	

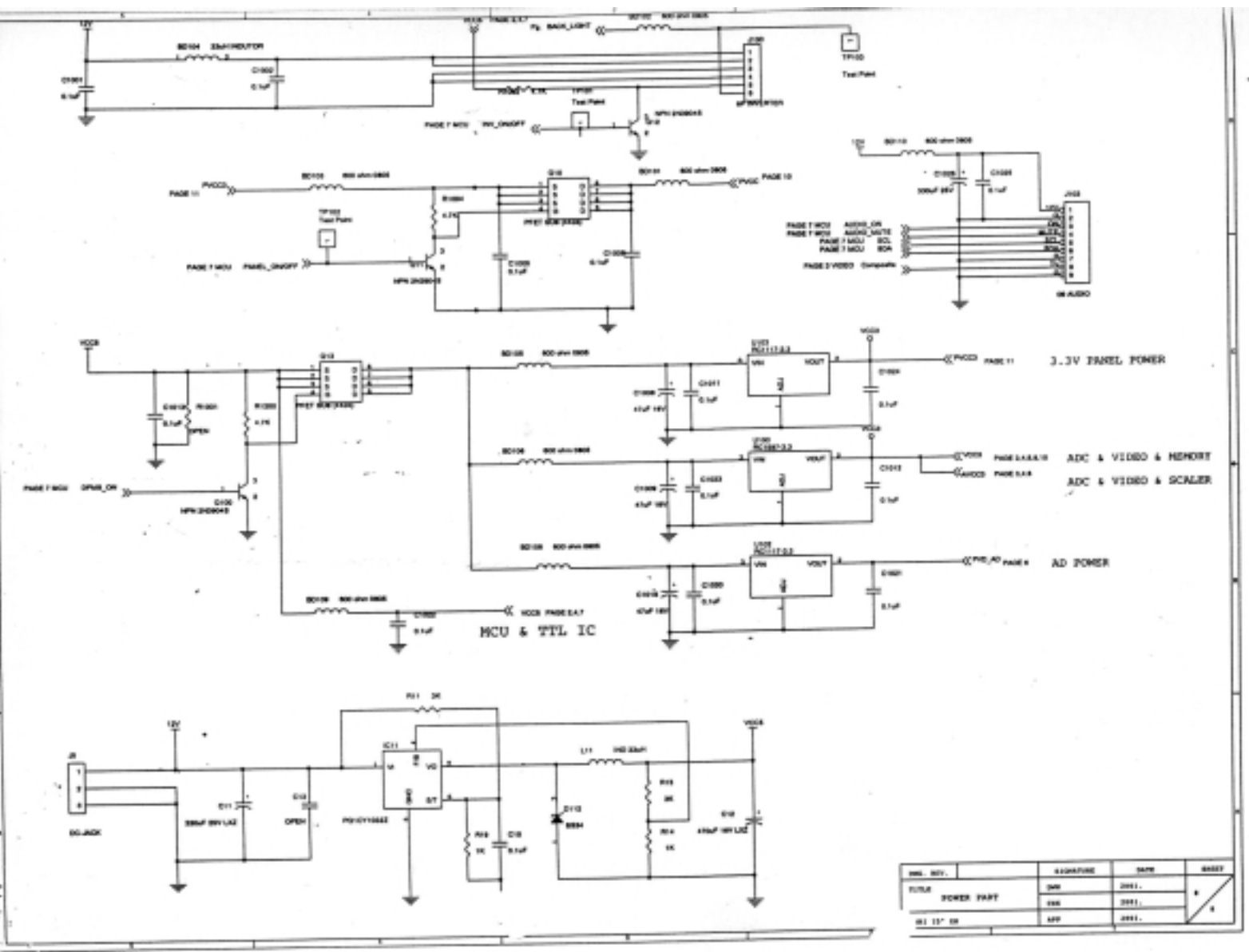
3.3V PANEL POWER
ADC & VIDEO & MEMORY
ADC & VIDEO & SCALER
AD POWER
MCU & TTL IC
DC JACK
POWER PART

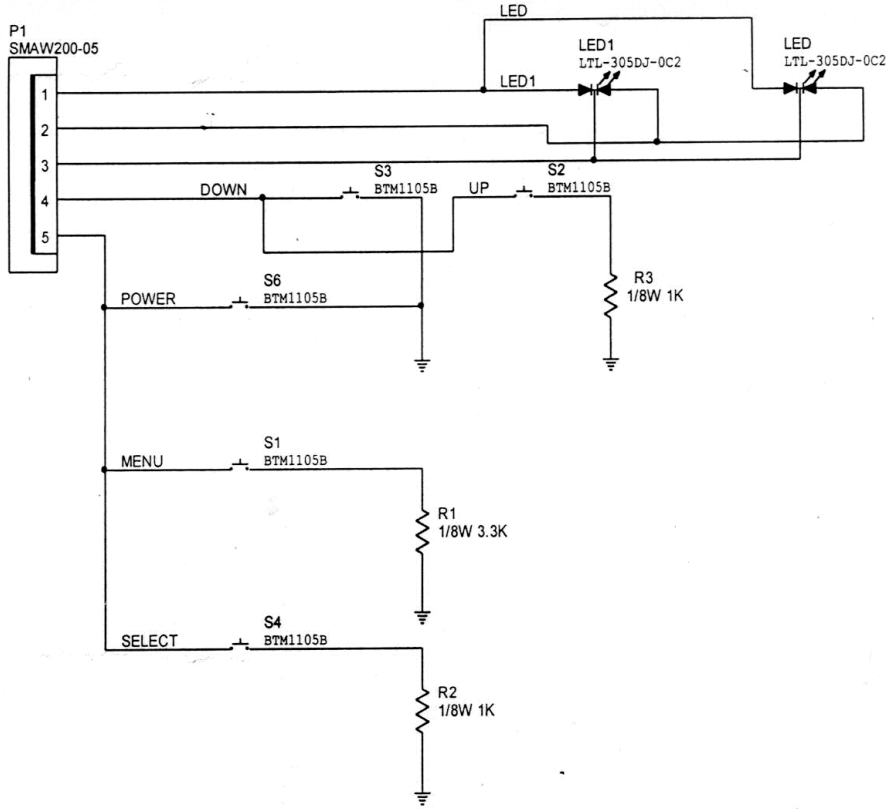

NOTE : 1.RESISTANCE IS SHOWN IN OHM K-1,000 M-1,000,000 RATED POWER OF RESISTOR NOT NOTED IN SCHMATIC DIAGRAM IS 1608 SIZE CHIP RESISTOR.

2.CAPACITANCE IS SHOWN pF AND NOTED CAPACITANCE IS SHOWN μF. μF-1,000,000pF RATED VOLTAGE OF CONDENCER NOT NOTED IN SCHEMATIC DIAGRAM IS 50V.

3.THIS SCHEMATIC DIAGRAM IS SUBJECTED TO CHANGE WITHOUT NOTICE FOR FURTHER IMPROVEMENT

PROJ.REV		SIGNATURE	DATE	SHEET
TITLE		DWN		
		CHK		
		APP		

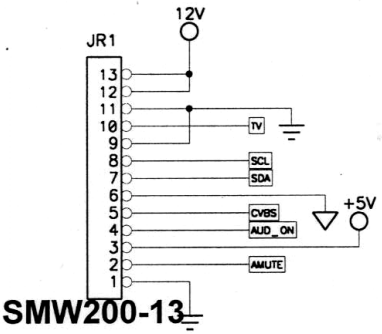

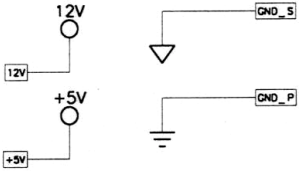

Title	510F AUD-TUNER BOARD	
Size A	Number POWER	Rev
Date Thursday. May 31,2001	Drawn by	
Filename	Sheet 1 of 3	

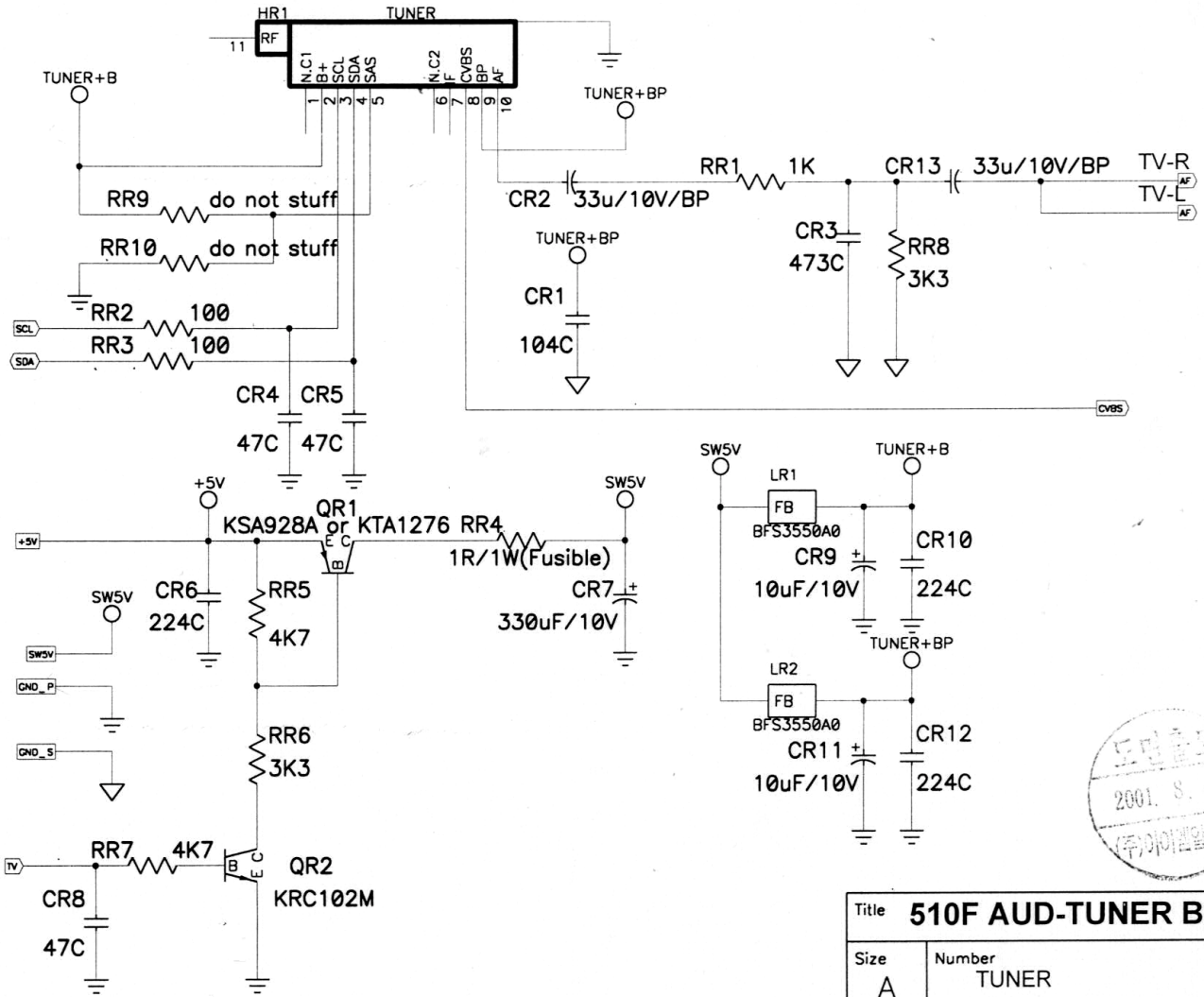

Title	510F AUD-TUNER BOARD	
Size A	Number TUNER	Rev
Date Thursday. May 31,2001	Drawn by	
Filename	Sheet 2 of 3	

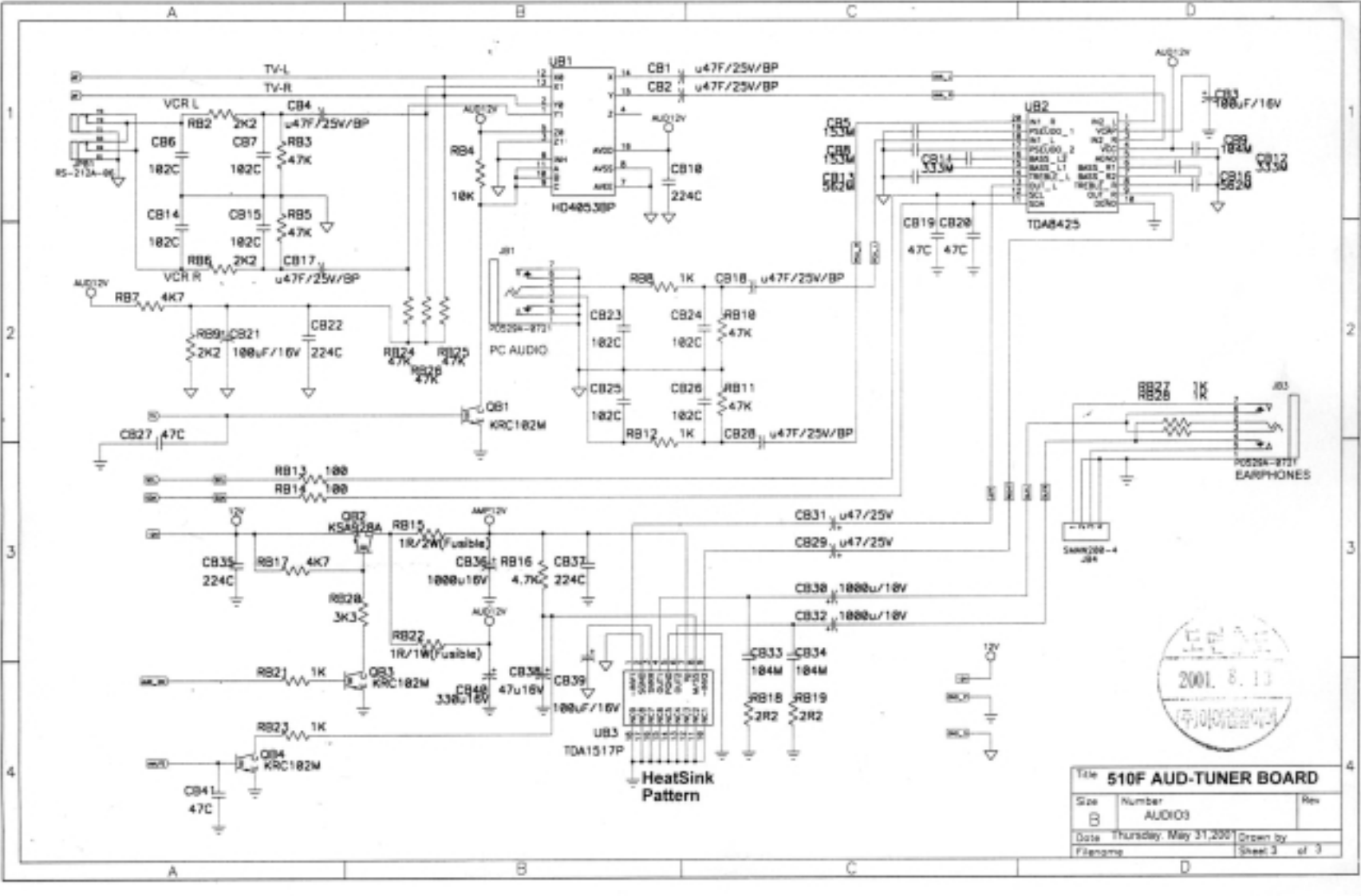
TV-L
TV-R
VCR L
VCR R
UB1
HD40530P
UB2
TDA8425
PC AUDIO
EARPHONES
UB3
TDA1517P
HeatSink Pattern
Title 510F AUD-TUNER BOARD
Size B
Number AUDIO3
Date Thursday, May 31,2001
Sheet 3 of 3
2001. 8. 13

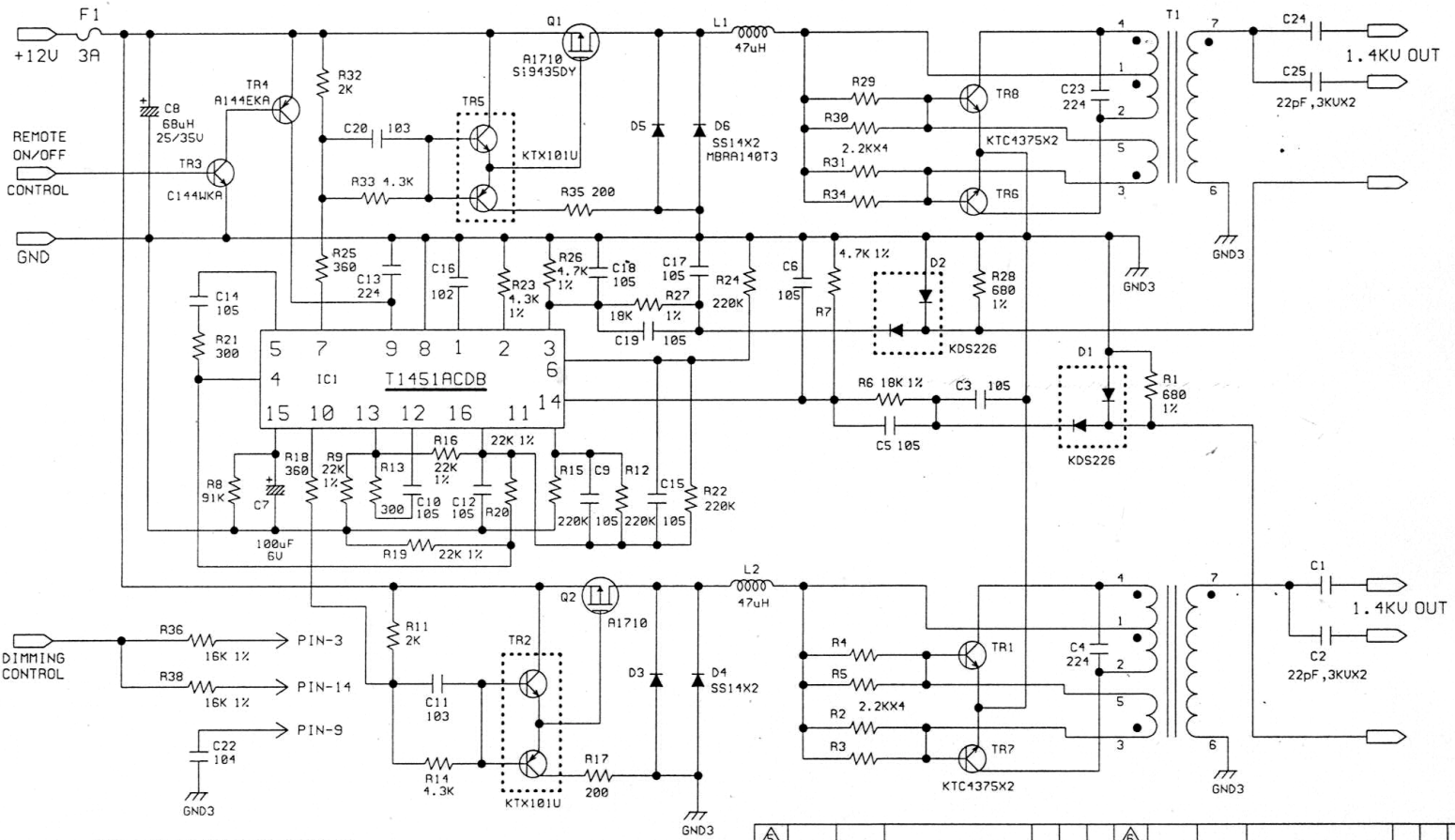

* NOTE : UNLESS OTHERWISE SPECIFIED
1. ALL RESISTORS ARE IN OHms 1/10W 5%
2. ALL CAPACITORS VALUE ARE IN MICROFARADS 50V

LIVE | NEUTRAL | FULL GROUND
DC 300V | DC 0 - 20V | DC 600V PEAK

NO	DATE	REV.	REASON	설계	검토	승인	NO	DATE	REV.	REASON	설계	검토	승인
5							6						
3							4						
1							2						

설계	검토	승인	DATE	DESCRIPTION	MODEL NO.	AT-0150TH
			2001. 10.15	for_SAMSUNG 15"_4-LAMP	DRAWING NO.	REV. B

P I S