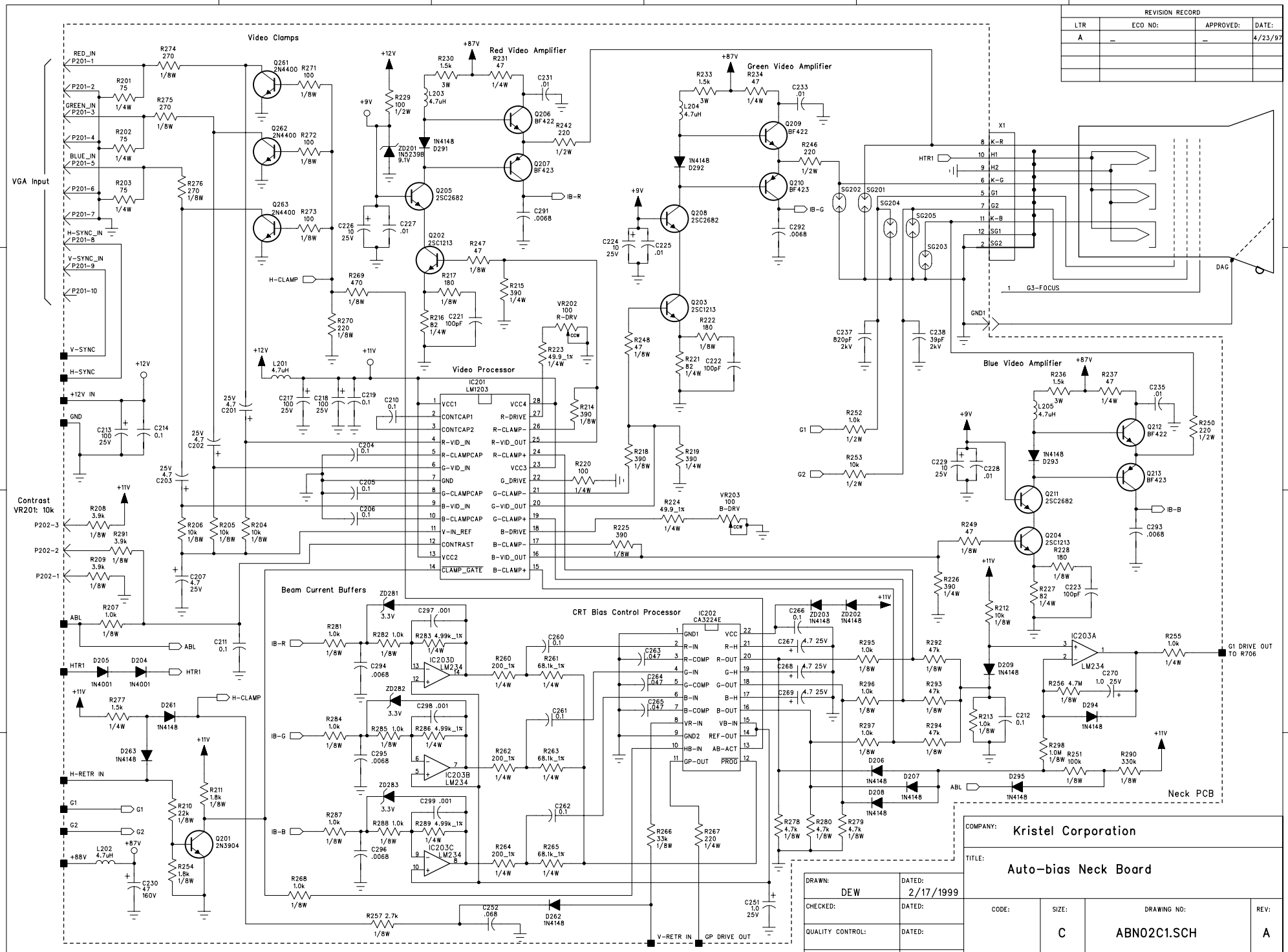

ABN02C1.sch-1 - Wed Jan 10 16:35:03 2001