NOBLEX MODELO 20 T.C 676

1

Diagrama de ubicación

1	2	3	4
5	6	7	8

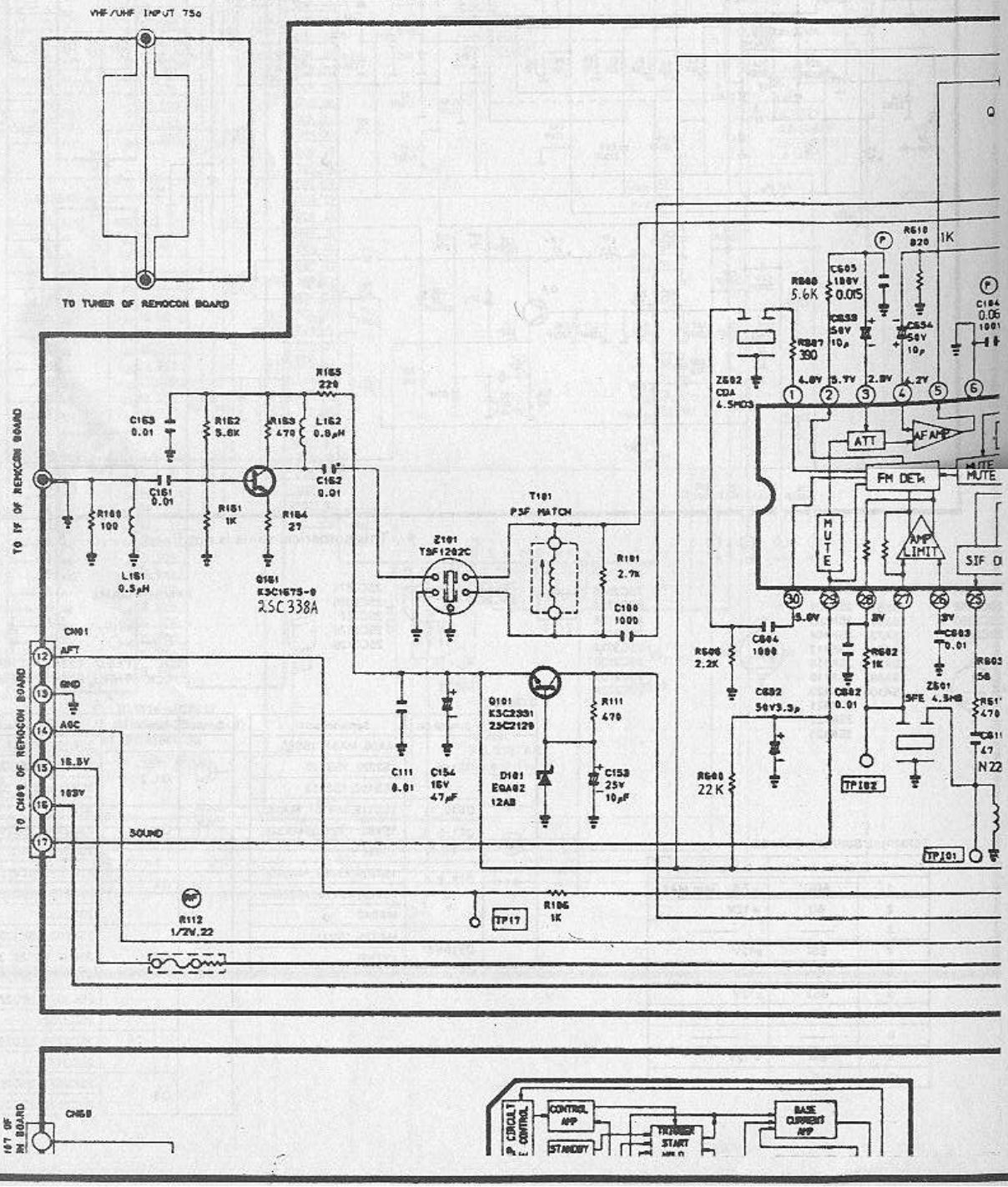

2

CIRCUITO ELECTRICO PRINCIPAL Y FUENTE

(30-0

RESISTOR	
TYPE	MARK
Carbon Composition	C
Oxide Metal Film	M
Metal Film	RM
Cement	R-C
Variable Resistor	
Positive Resistor	

CAPACITOR	
TYPE	MARK
Ceramic	No Mark
Polyester	P
Tantalium	T
Metal Polyestor	MP
Polypropylene	P.P
Polyester Polypro	DSR
Chemical Electrolytic	
Chemical Non-Polar	

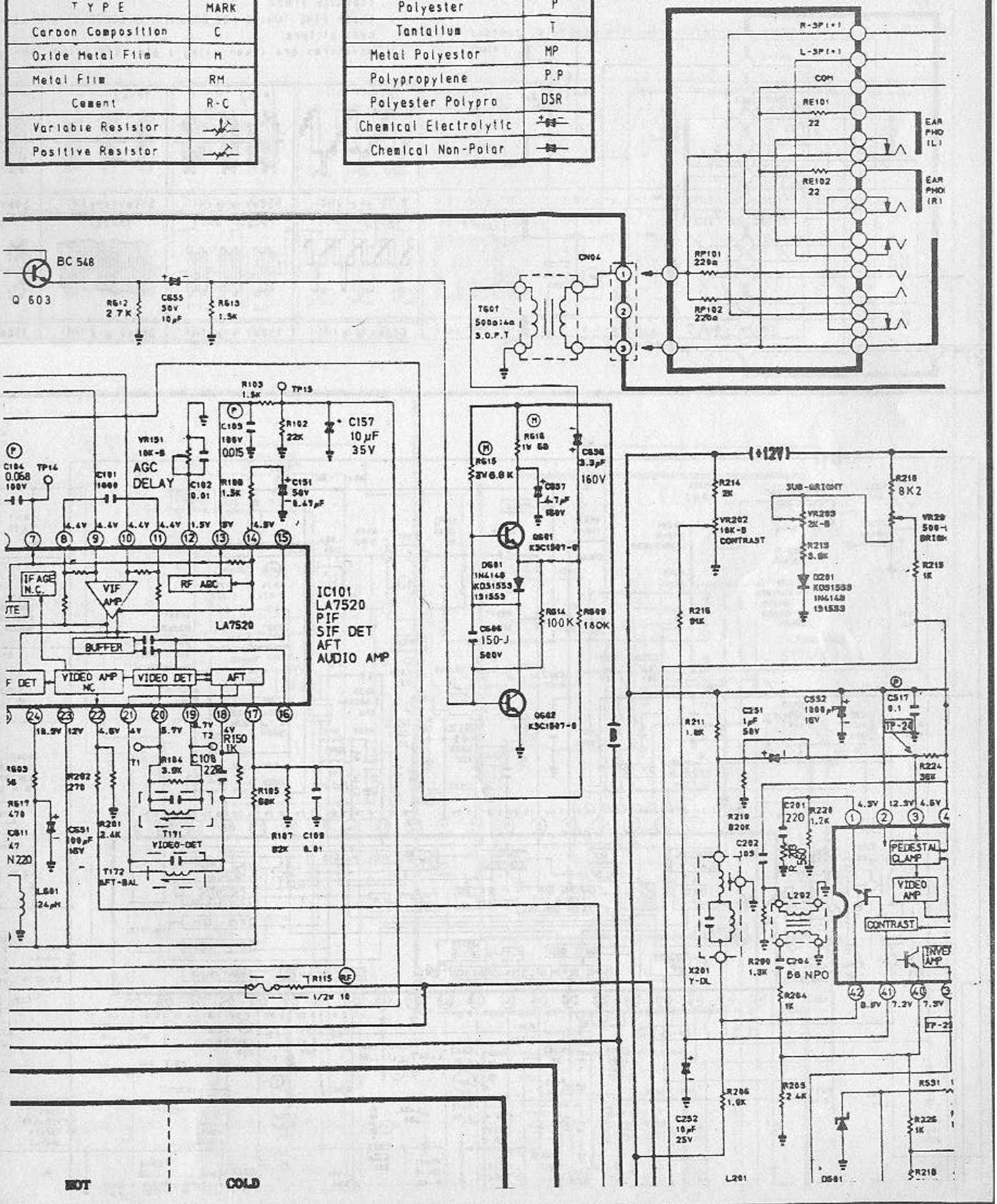

FUENTE (30-05-88)

OBSERVATION OF VOLTAGES AND WAVEFORMS

1 Voltages read with "VTVM" from point shown to chassis voltage 220/240v colour bar signal.
2 Voltages reading may vary ±20%.
3 The schematic shown is representative only.
4 All waveforms are taken using a wide band oscilloscop capacity probe
5 Check FINE TUNING.AGC.BRIGHTNESS.CONTRAST.and COLOUR best picture.
6 Waveforms are taken using a standard colour bar sign

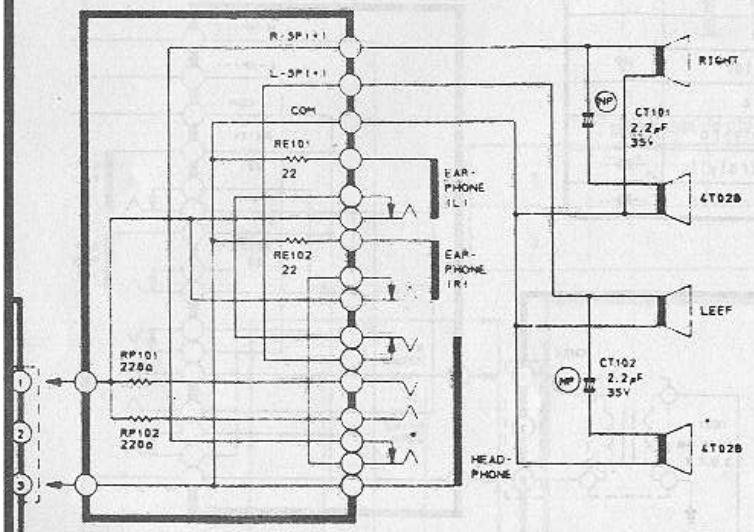

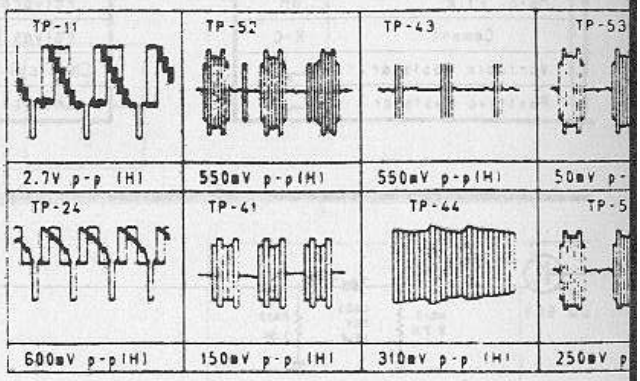

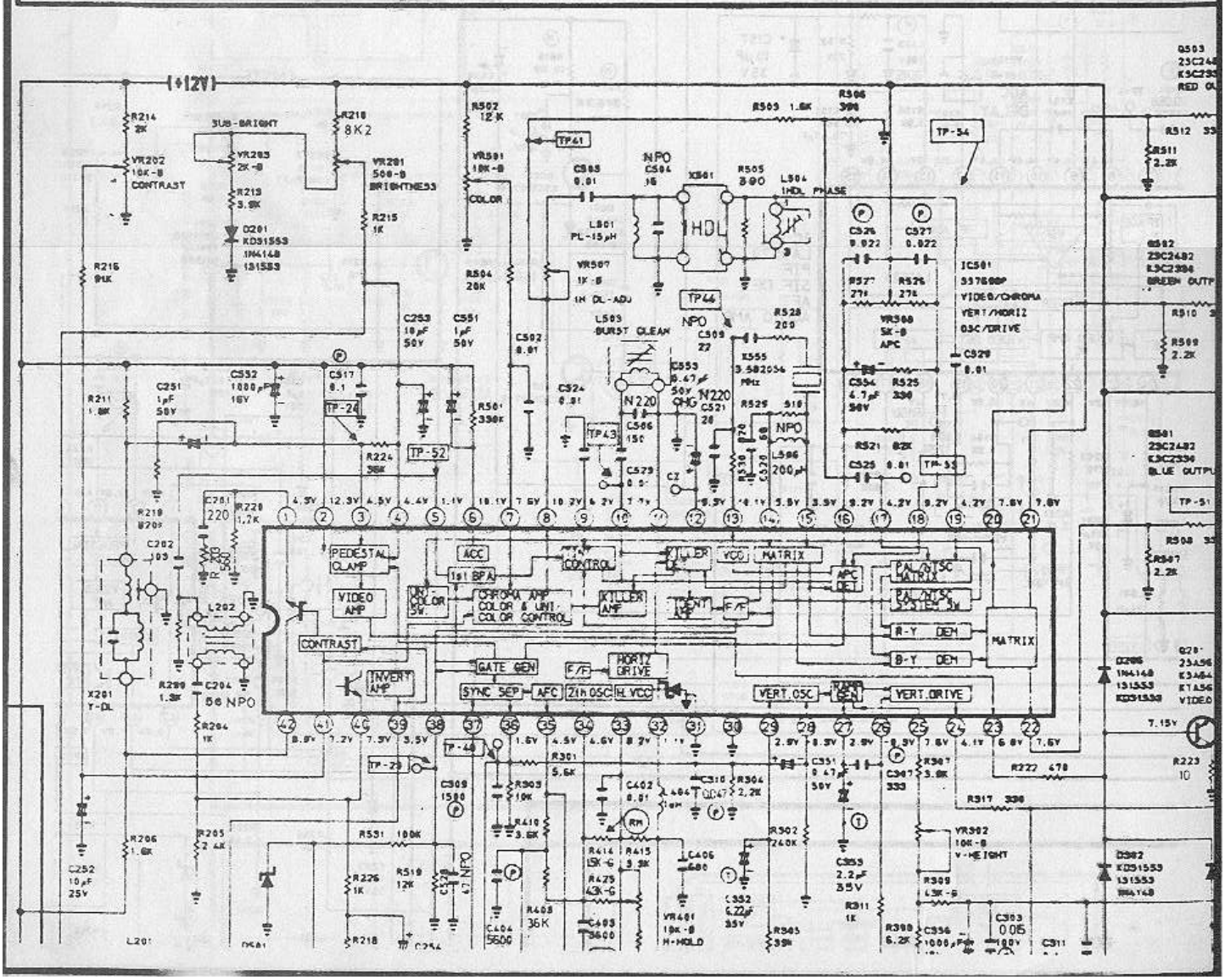

vn to chassis ground. line

ly.
d oscilloscope and a low

T.and COLOUR controls for

eur bar signal.

EXPRESSION

1 Resistance is shown ohm K=1,000 M=1,000,000.
2 Unless otherwise noted in schematic all capacitor than 1 are expressed in mfd.the values more than 1 in pF.
3 Unless otherwise noted in schematic all inductor values ressed in uH.and the values less than 1 in m

NOTE
The circuits are subject to change without notice to improve the picture quality

TP-53	TP-51	PIN3 (R-OUT)	TP-23	PIN34 OF IC501	PIN98 (Q404 COLLECTOR)	PIN V2 OF CN44
50mV p-p (H)	3.5V p-p (H)	120V p-p (H)	5.8V p-p (H)	2.8V p-p (H)	1100V p-p (H)	55V p-p (H)

TP-54	PIN4 (B-OUT)	PIN5 (G-OUT)	TP-48	TP-47	PIN27 OF IC501
250mV p-p (H)	120V p-p (H)	120V p-p (H)	9.5V p-p (H)	2.4V p-p (H)	2.6V p-p (H)

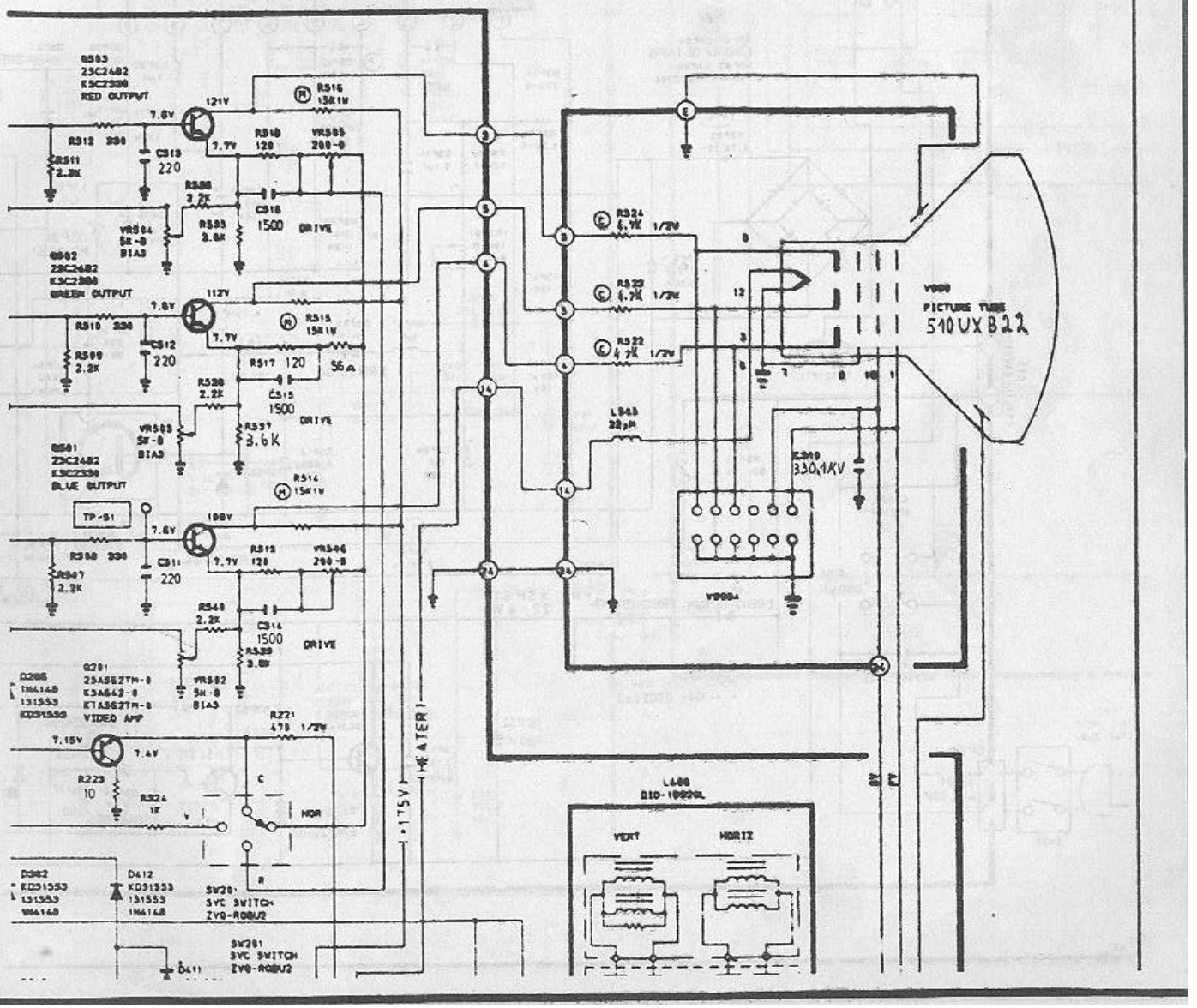

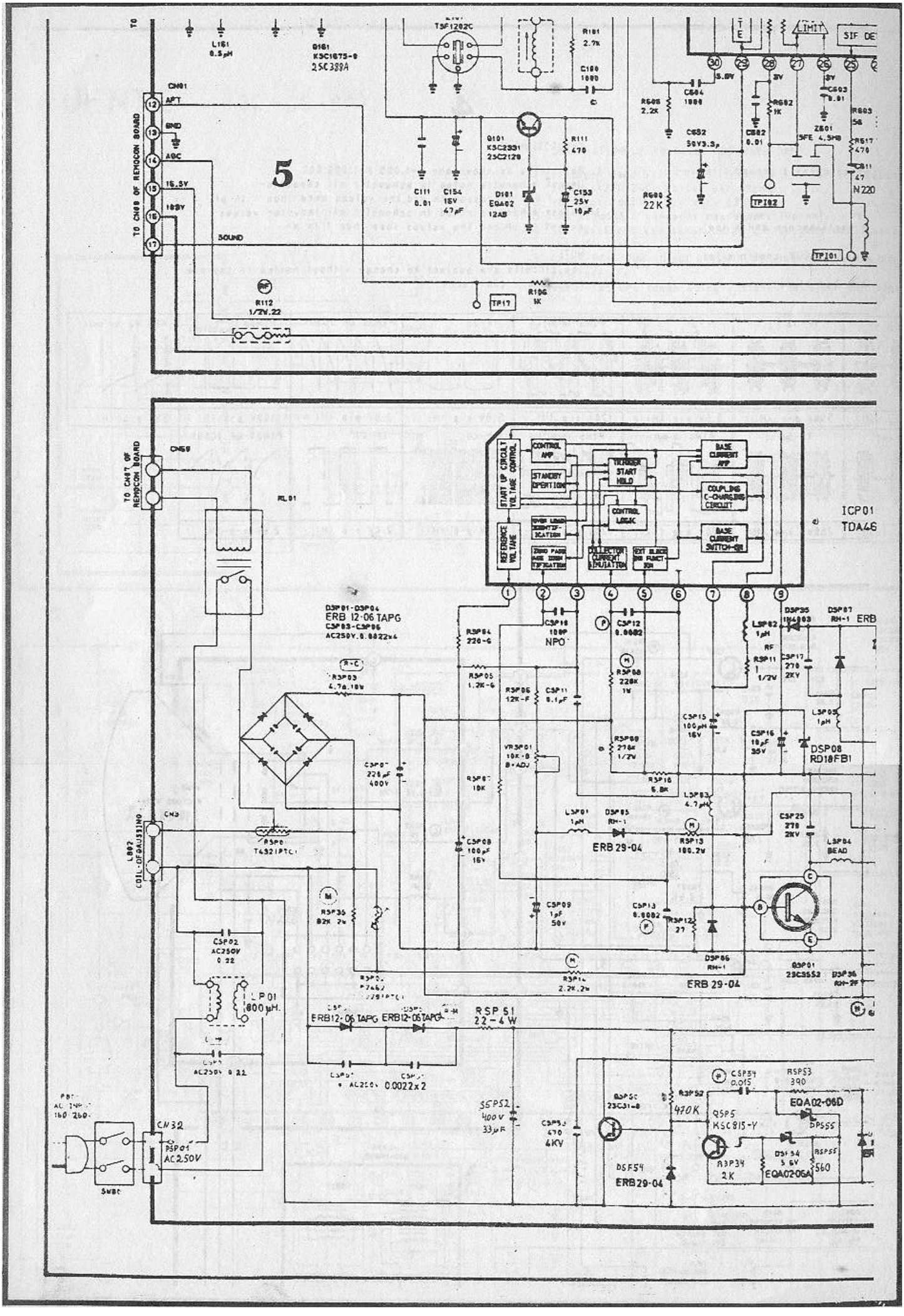

5
TO CN08 OF REMOCON BOARD
CN01
APT
GND
AGC
16.5V
10.5V
SOUND
L161 0.5μH
Q161 KSC1675-0 2SC388A
TSF1202C
R101 2.7K
C100 1000
Q101 KSC2331 2SC2120
R111 470
C111 0.01
C154 16V 47μF
D101 EQA02 12AB
C153 25V 10μF
R606 2.2K
C604 1000
C652 50V3.3μ
R600 22K
R602 1K
C602 0.01
C603 0.01
Z601 SFE 4.5MB
R603 56
R617 470
C611 47
N220
TPI02
TPI01
TP17
R106 1K
R112 1/2W.22
LIMIT
SIF DE
TO CN07 OF REMOCON BOARD
CN69
RL01
START UP CIRCUIT VOLTAGE CONTROL
CONTROL AMP
STANDBY OPERATION
TRIGGER START HOLD
CONTROL LOGIC
BASE CURRENT AMP
COUPLING C-CHARGING CIRCUIT
BASE CURRENT SWITCH-ON
REFERENCE VOLTAGE
COLLECTOR CURRENT SIMULATION
ICP01 TDA46
DSP01-DSP04 ERB 12-06 TAPG
CSP03-CSP06 AC250V.0.0022x4
R-C
RSP03 4.7Ω.10W
CSP07 220μF 400V
RSP04 220-G
RSP05 1.2K-G
RSP06 12K-F
CSP10 100P NPO
CSP11 0.1μF
CSP12 0.0082
RSP08 220K 1W
RSP09 270K 1/2W
RSP10 6.8K
VRSP01 10K-B B-ADJ
RSP07 10K
CSP08 100μF 16V
LSP01 1μH
DSP05 RH-1
ERB 29-04
RSP13 100.2W
LSP02 1μH
RSP11 1 1/2W
DSP35 1N4003
DSP07 RH-1
CSP17 270 2KV
LSP05 1μH
CSP15 100μH 16V
CSP16 10μF 35V
DSP08 RD18FB1
LSP03 4.7μH
CSP25 270 2KV
LSP04 BEAD
CSP09 1μF 50V
CSP13 0.0082
RSP12 27
DSP06 RH-1
ERB 29-04
Q5P01 2SC5552
DSP36 RH-2F
RSP14 2.2K.2W
CN3
LB02 COIL-OF-GAUSSING
RSP01 T4321PTC1
RSP35 82K 2W
CSP02 AC250V 0.22
LP01 800μH.
ERB12-06 TAPG
ERB12-06 TAPG
RSP51 22-4W
0.0022x2
S5P52 400V 33μF
CSP53 470 4KV
Q5P5C 2SC31-0
R3P52 470K
CSP54 0.015
RSP53 390
EQA02-06D
Q5P5 KSC815-Y
DPS55
R3P34 2K
DSP54 5.6V
EQA02-06A
RSP55 560
DSF54 ERB29-04
CN32
PSP01 AC250V
SWBC

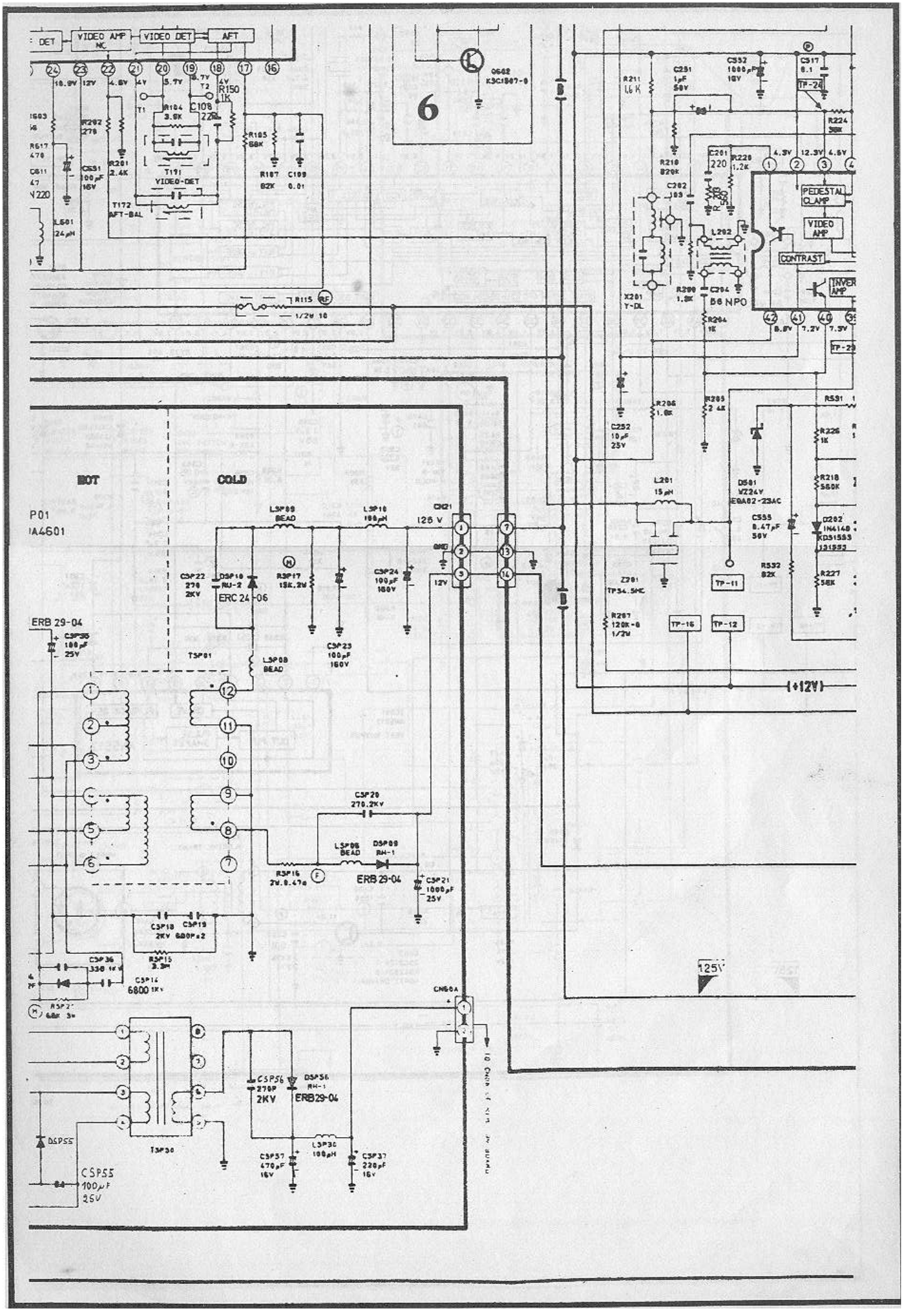
VIDEO AMP
VIDEO DET
AFT
VIDEO-DET
AFT-BAL
PEDESTAL CLAMP
VIDEO AMP
CONTRAST
HOT
COLD
ERB 29-04
ERC 24-06
+12V
125V

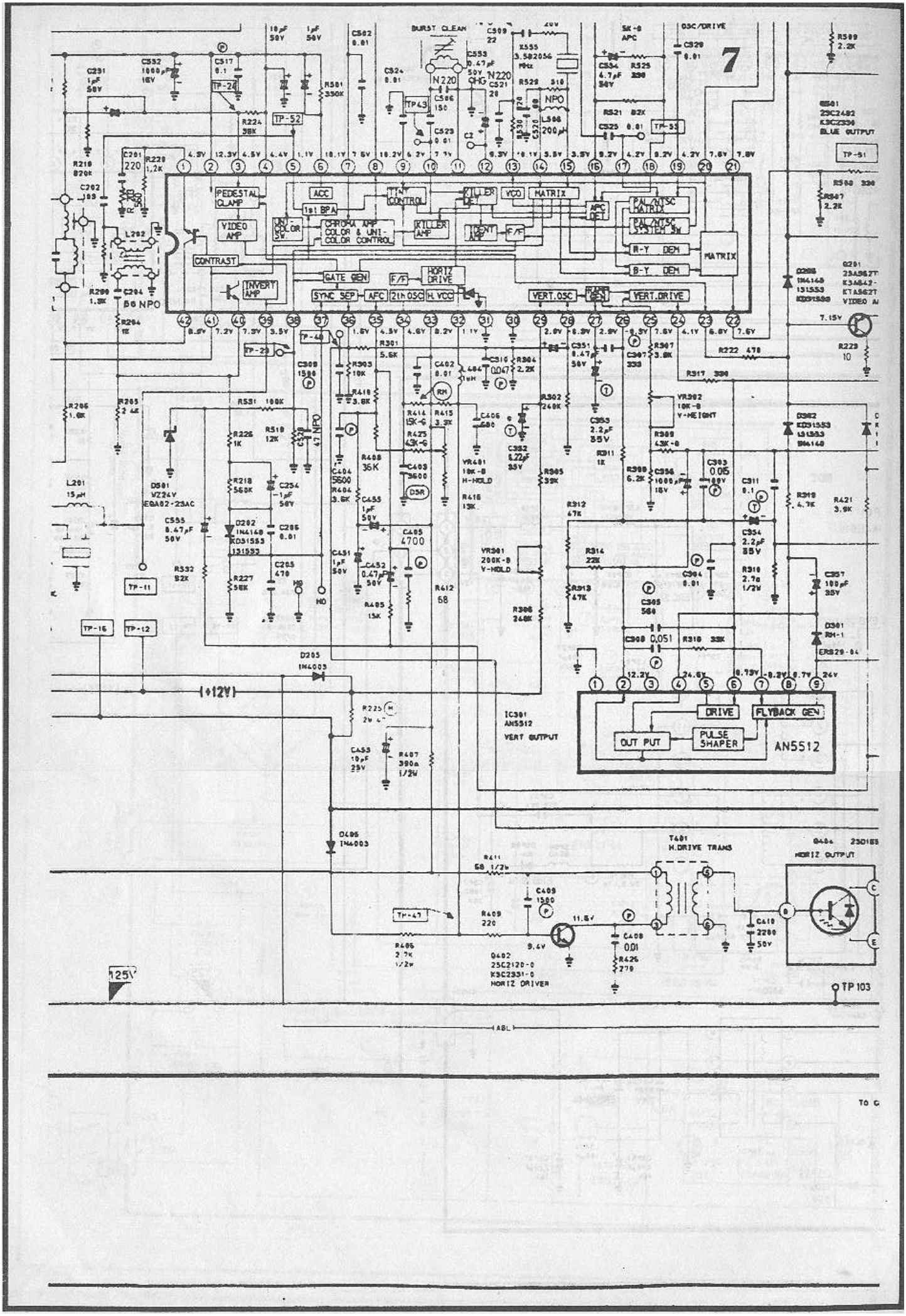
7
BURST CLEAN
OSC/DRIVE
PEDESTAL CLAMP
VIDEO AMP
CONTRAST
INVERT AMP
ACC
1st BPA
CHROMA AMP COLOR & UNI-COLOR CONTROL
TINT CONTROL
KILLER AMP
KILLER DET
VCO
MATRIX
APC DET
PAL/NTSC MATRIX
PAL/NTSC SYSTEM SW
R-Y DEM
B-Y DEM
GATE GEN
HORIZ DRIVE
SYNC SEP
AFC
2th OSC
H.VCC
VERT.OSC
VERT.DRIVE
VR302 10K-B V-HEIGHT
VR401 10K-B H-HOLD
VR301 200K-B V-HOLD
IC301 AN5512 VERT OUTPUT
DRIVE
FLYBACK GEN
OUT PUT
PULSE SHAPER
AN5512
T401 H.DRIVE TRANS
Q402 2SC2120-O 2SC2331-O HORIZ DRIVER
Q404 2SD155 HORIZ OUTPUT
+12V
125V
TP 103
TO C

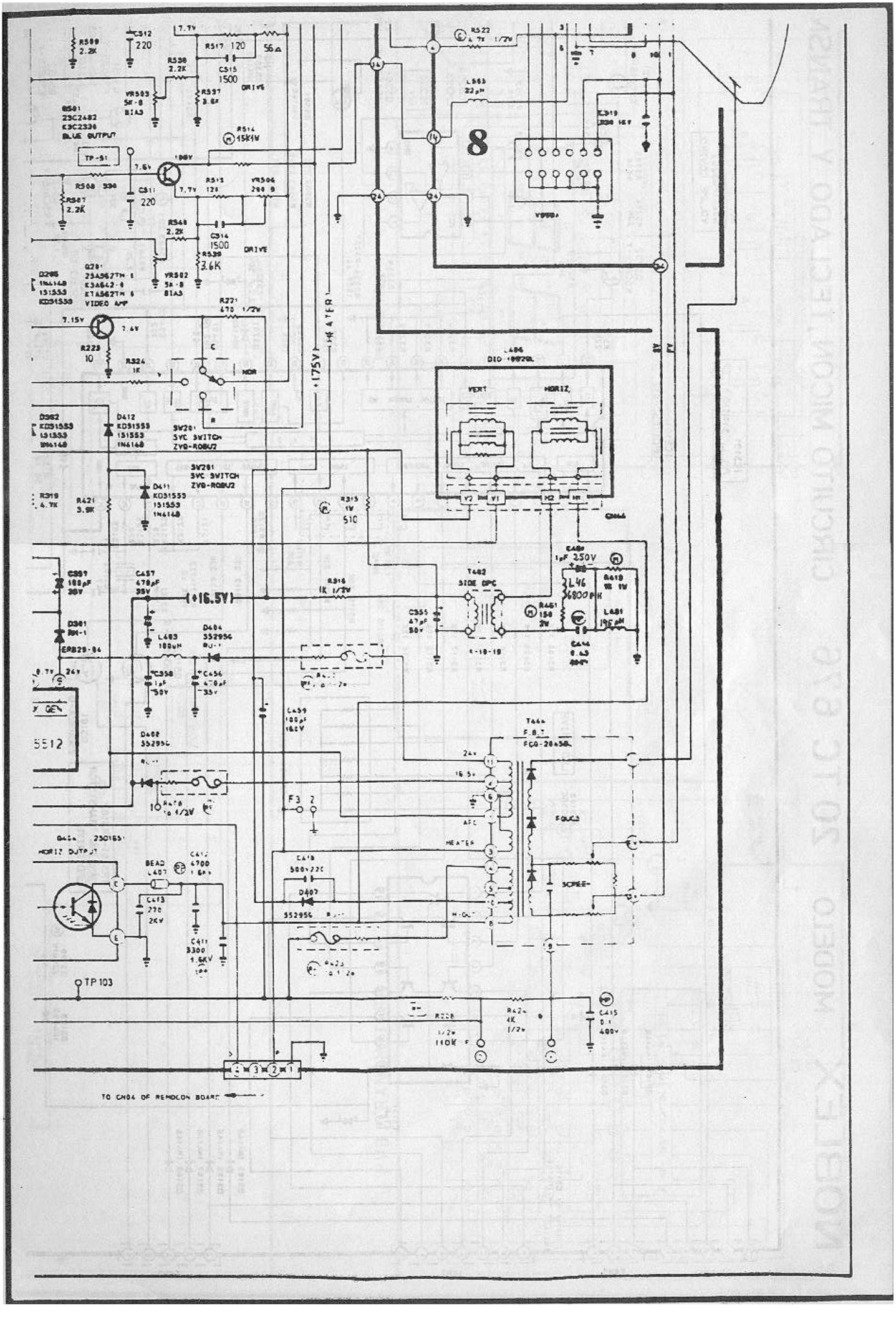
8
VERT
HORIZ
+175V
HEATER
(+16.5V)
TP 103
TO CN04 OF REMOCON BOARD

NOBLEX MODELO 20 TC 676 CIRCUITO MICON, TECLADO Y TRANSM

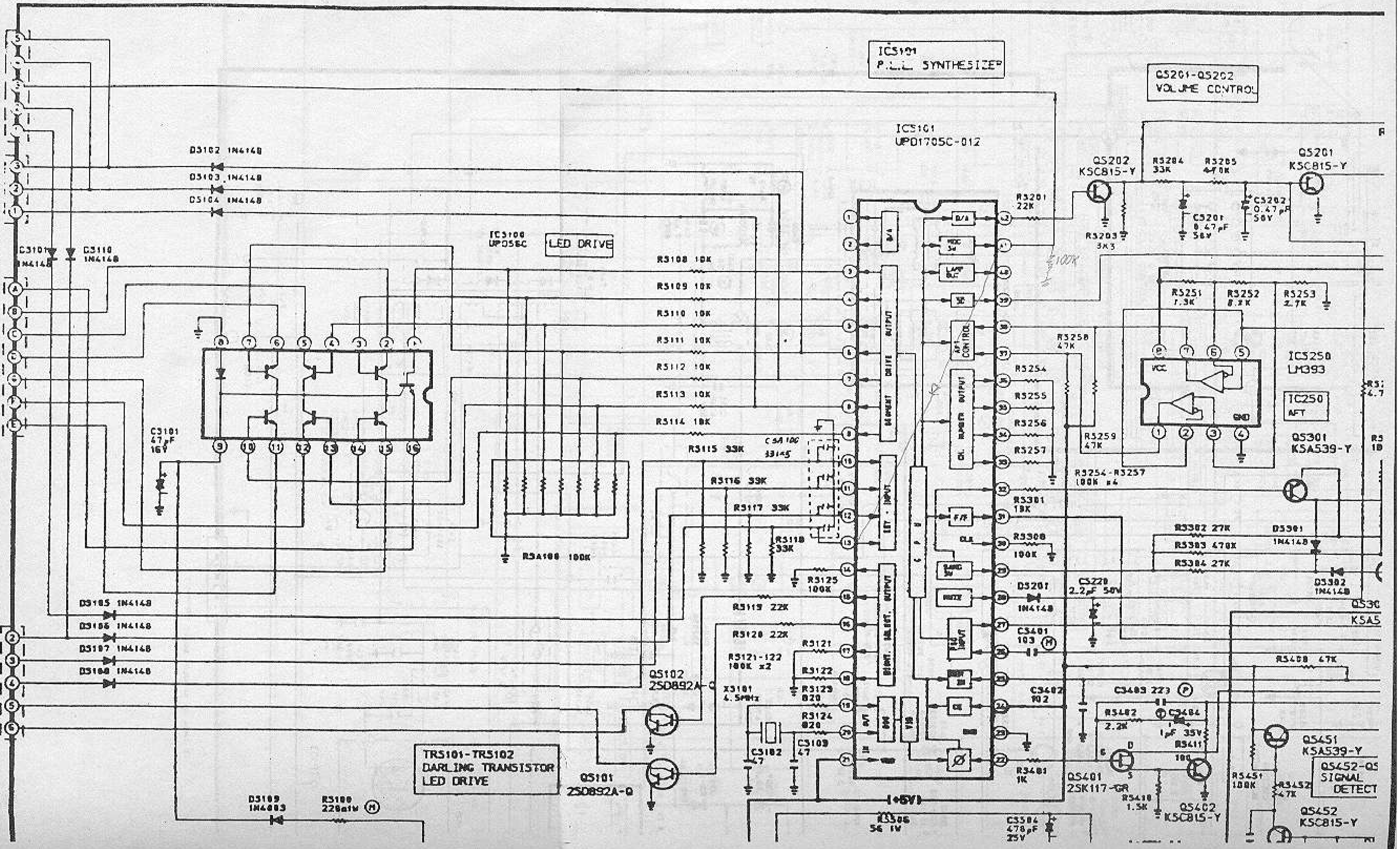

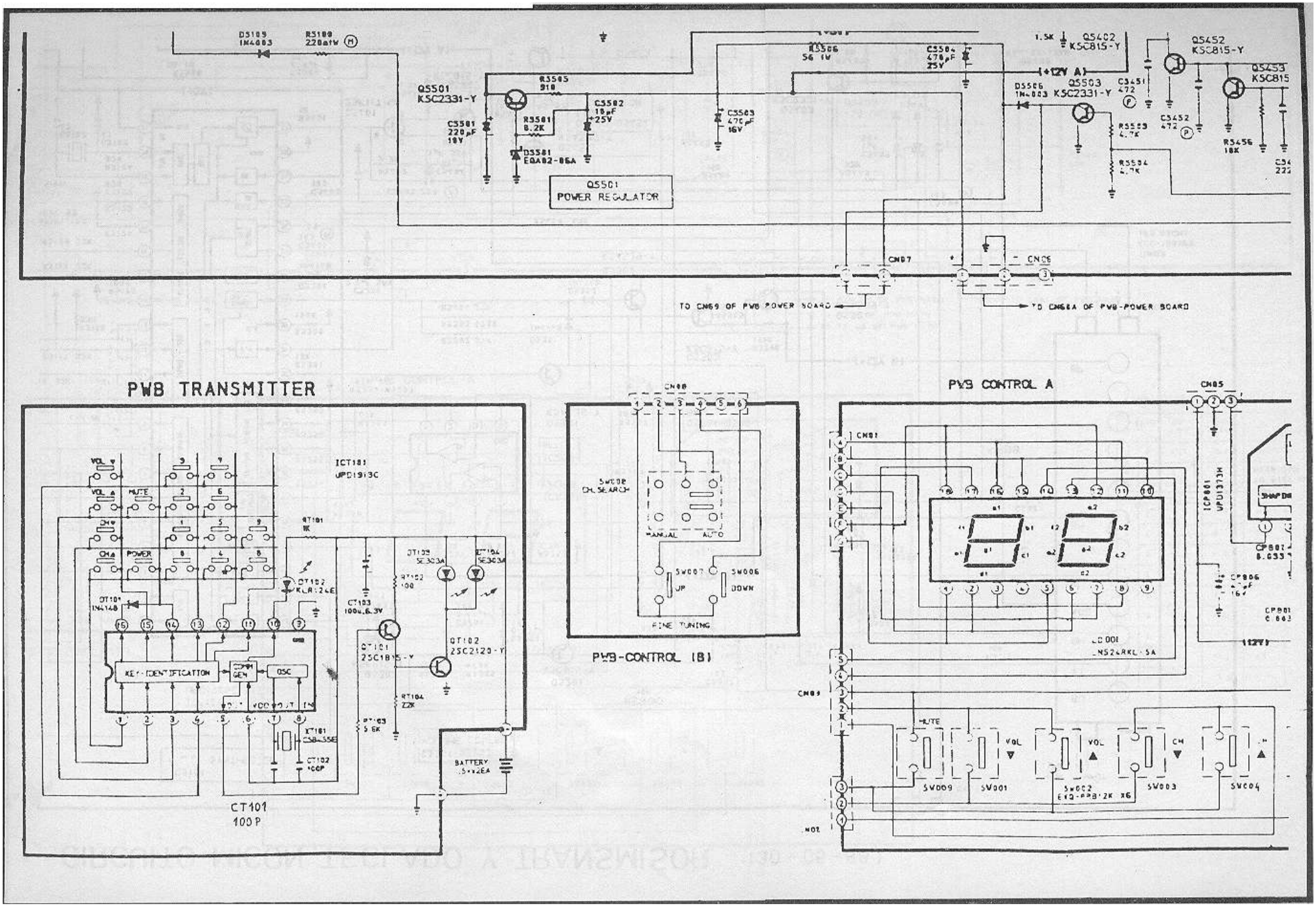
Q5501
POWER REGULATOR
TO CN69 OF PWB POWER BOARD
TO CN68A OF PWB-POWER BOARD
PWB TRANSMITTER
PWB-CONTROL (B)
PWB CONTROL A
CT101
100P

CIRCUITO MICON, TECLADO Y TRANSMISOR (30-05-88)

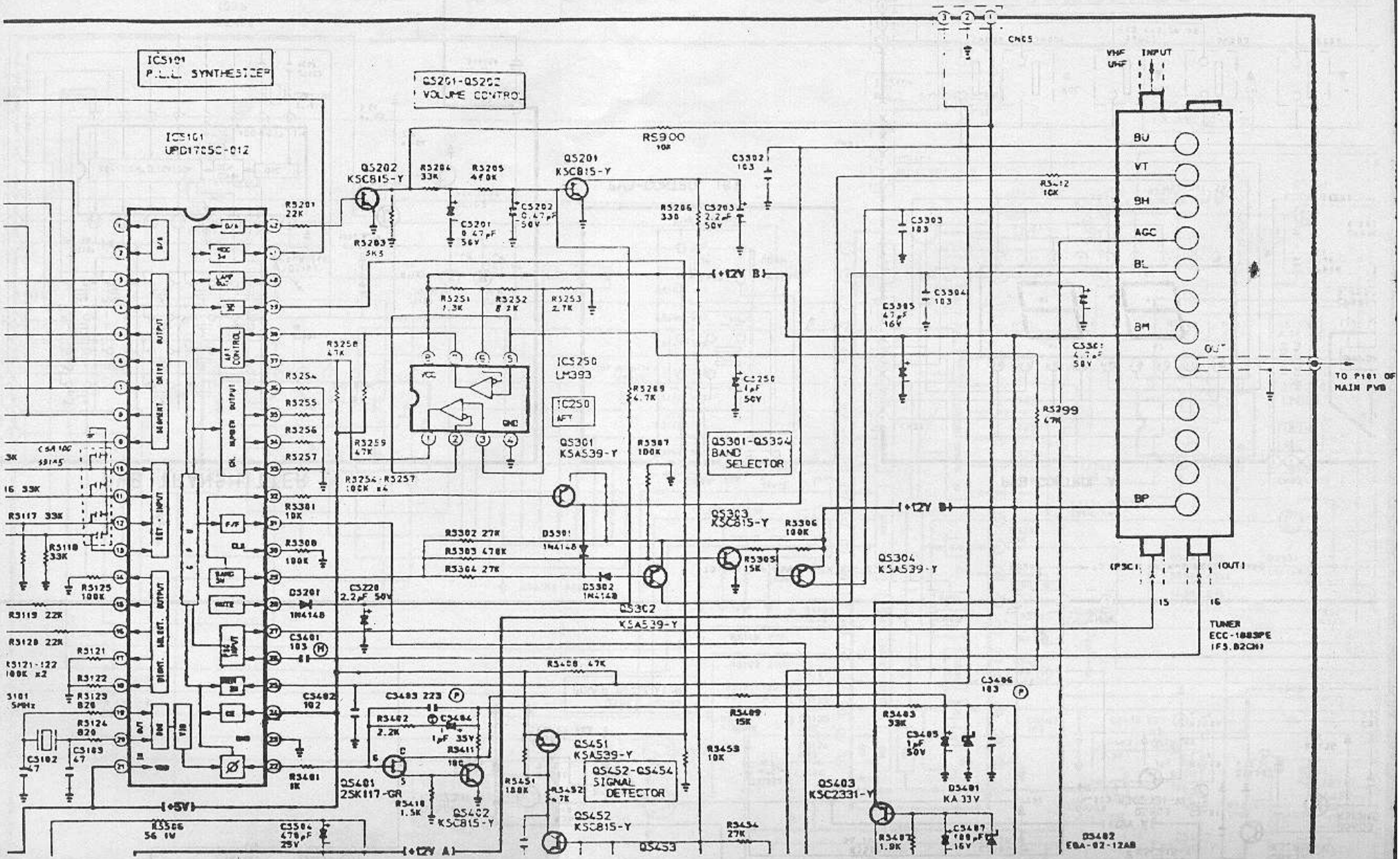

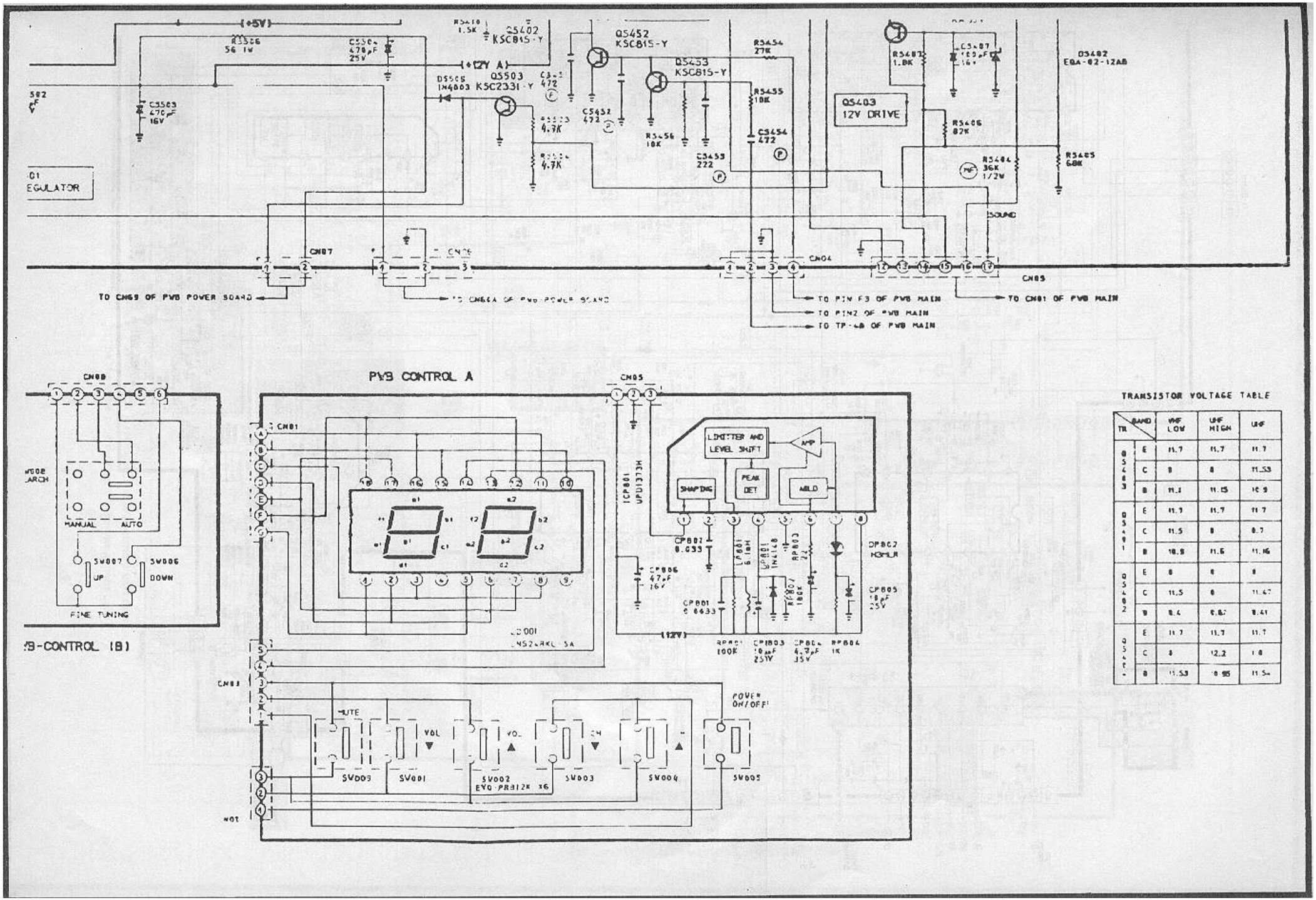

TRANSISTOR VOLTAGE TABLE

TR	BAND	VHF LOW	VHF HIGH	UHF
Q5483	E	11.7	11.7	11.7
	C	8	8	11.53
	B	11.1	11.15	10.9
Q5491	E	11.7	11.7	11.7
	C	11.5	8	8.7
	B	10.9	11.6	11.16
Q5482	E	8	8	8
	C	11.5	8	11.47
	B	8.4	8.87	8.41
Q5481	E	11.7	11.7	11.7
	C	8	12.2	10
	B	11.53	10.95	11.54