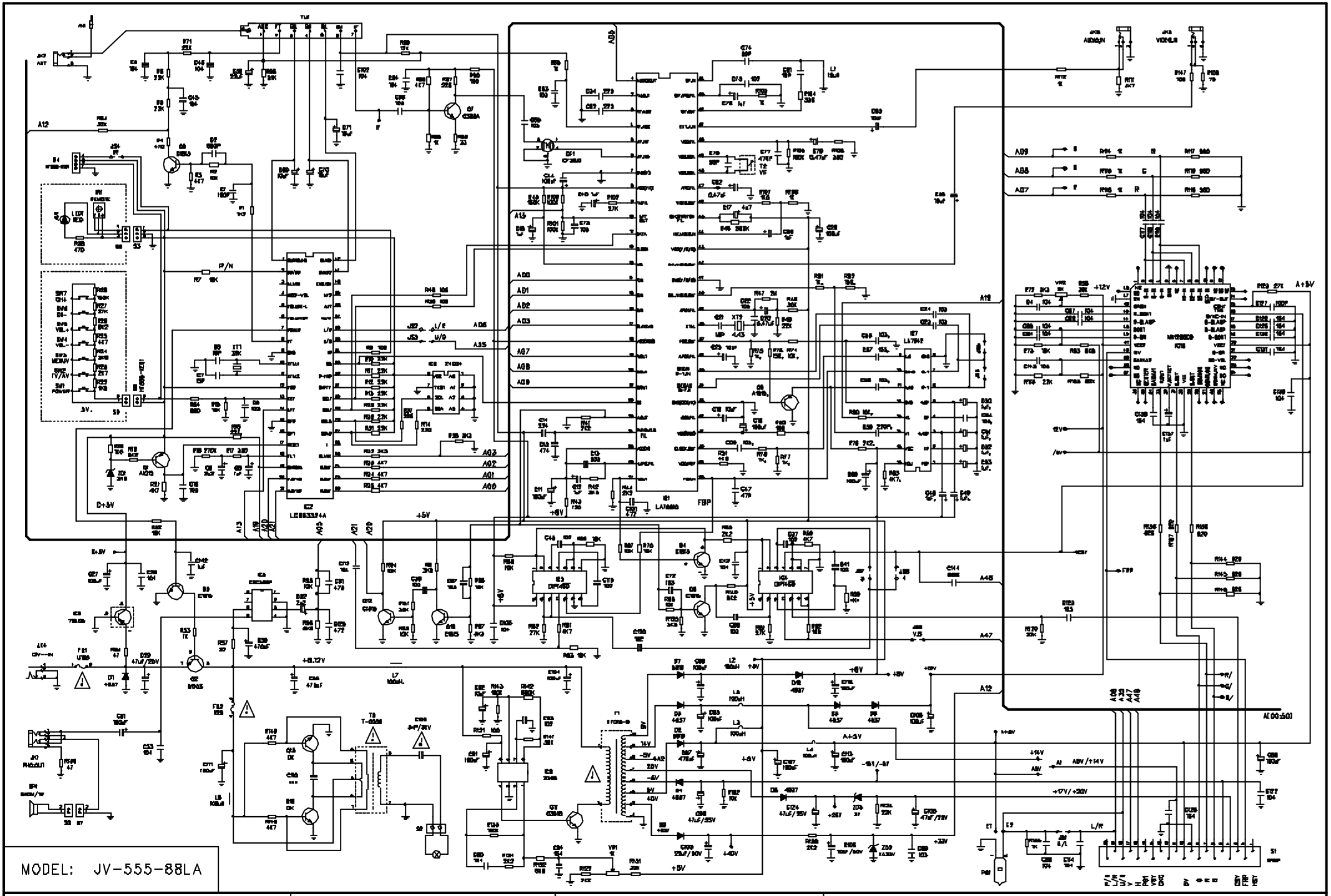

MODEL: JV-555-88LA

STUDIED OUT:	AUDITING:	AUTHORIZED:	DATE: 2003/10/19	REV: B