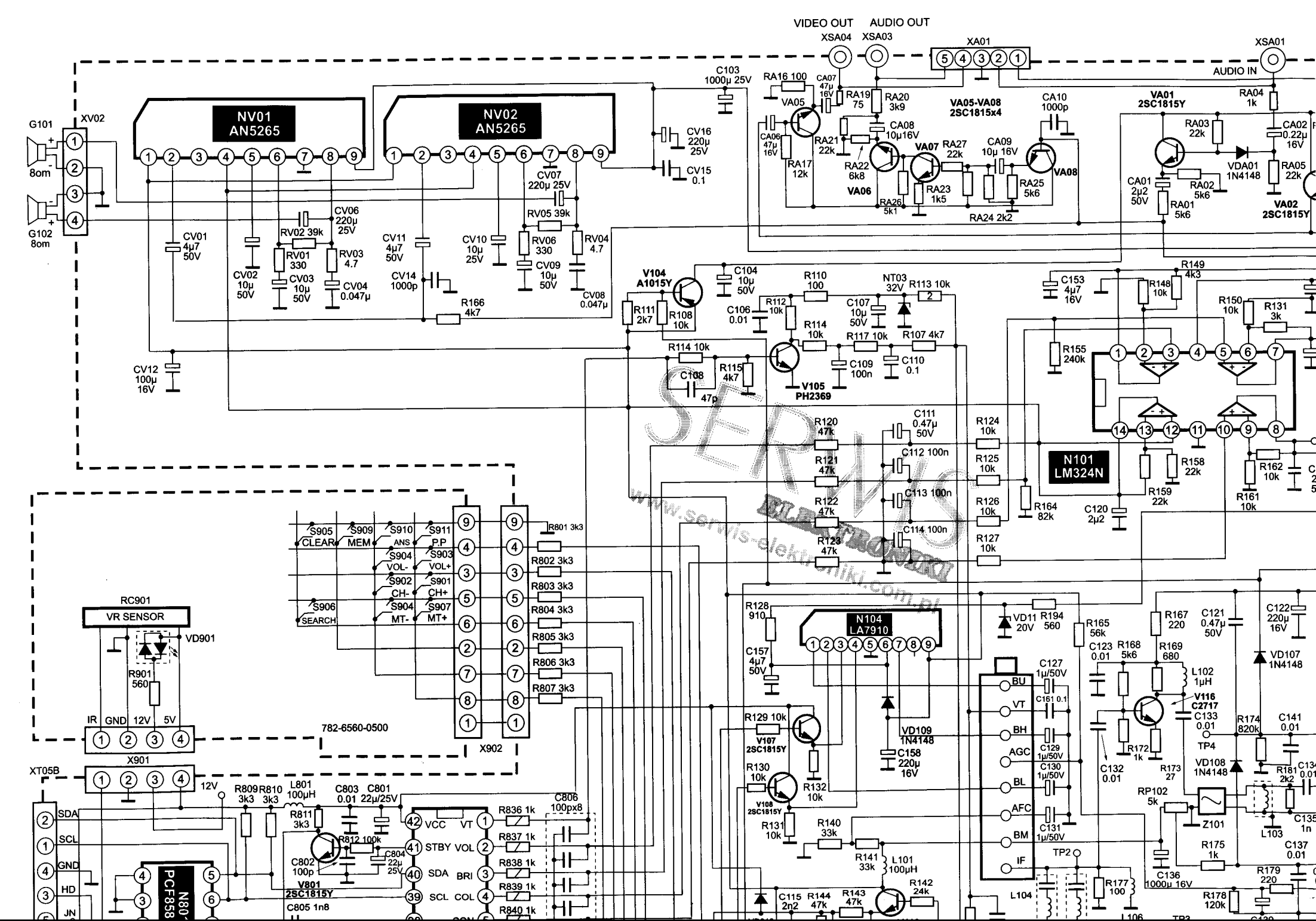

SERWIS
www.serwis-elektroniki.com.pl

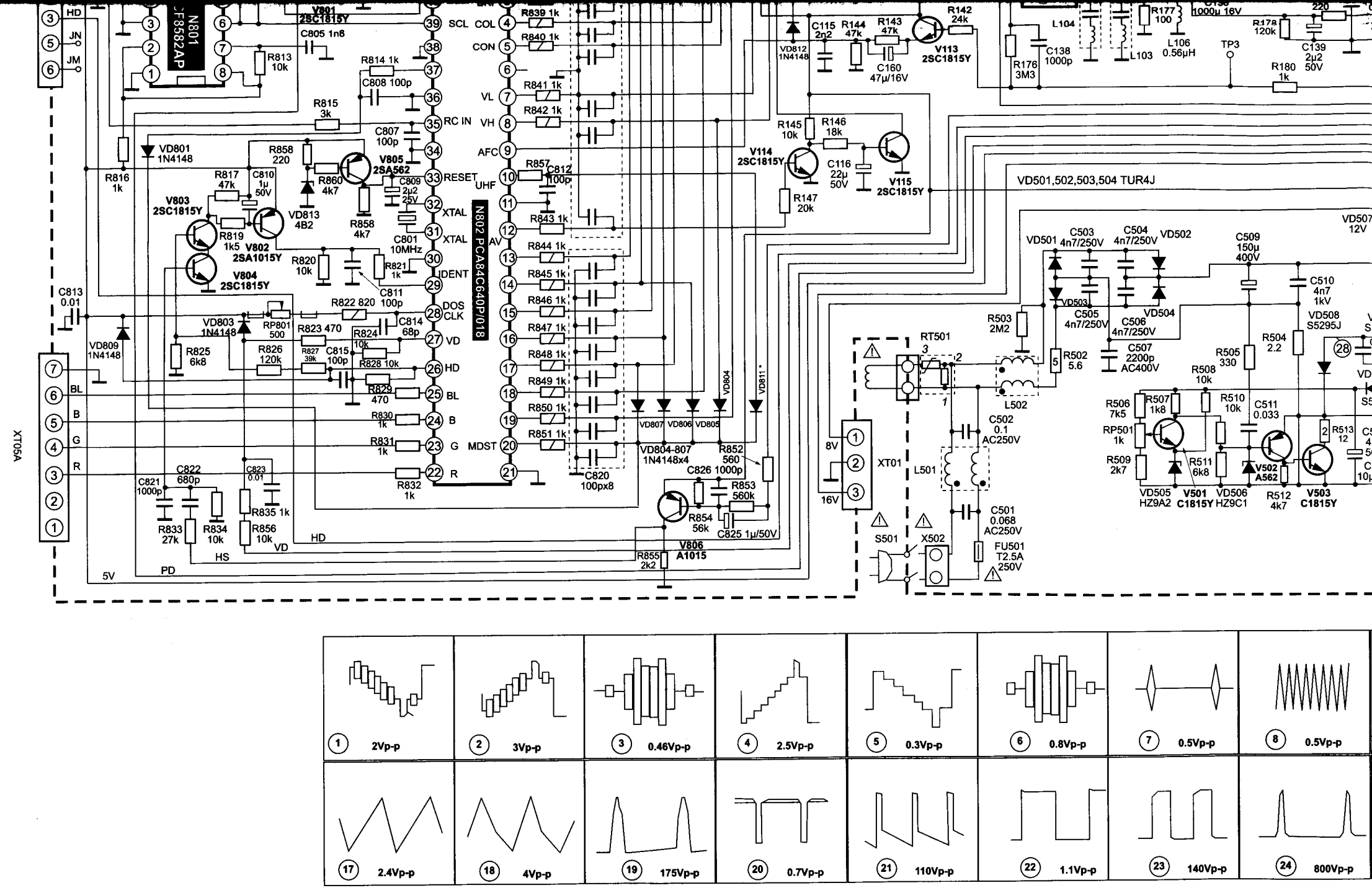

① 2Vp-p	② 3Vp-p	③ 0.46Vp-p	④ 2.5Vp-p	⑤ 0.3Vp-p	⑥ 0.8Vp-p	⑦ 0.5Vp-p	⑧ 0.5Vp-p
⑰ 2.4Vp-p	⑱ 4Vp-p	⑲ 175Vp-p	⑳ 0.7Vp-p	㉑ 110Vp-p	㉒ 1.1Vp-p	㉓ 140Vp-p	㉔ 800Vp-p

XT05A

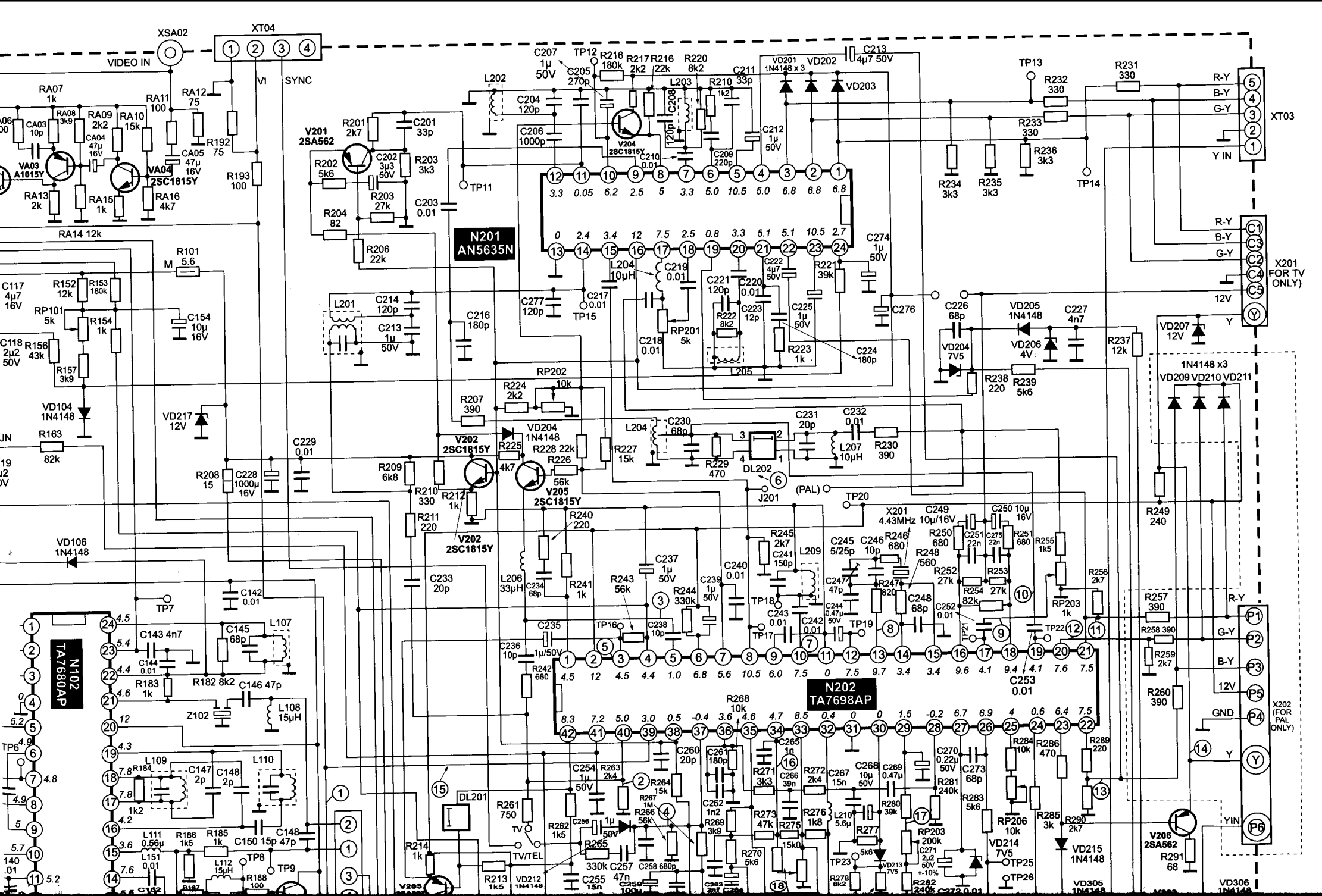

XSA02
XT04
VIDEO IN
VI
SYNC
XT03
R-Y
B-Y
G-Y
Y IN
X201 FOR TV ONLY)
12V
Y
1N4148 x3
VD209 VD210 VD211
X202 (FOR PAL ONLY)
GND
YIN
N201 AN5635N
N202 TA7698AP
N102 TA7680AP
V201 2SA562
V202 2SC1815Y
V204 2SC1815Y
V205 2SC1815Y
V206 2SA562
VA03 A1015Y
VA04 2SC1815Y
X201 4.43MHz
DL201
DL202
J201
(PAL)
TV
TV/TEL

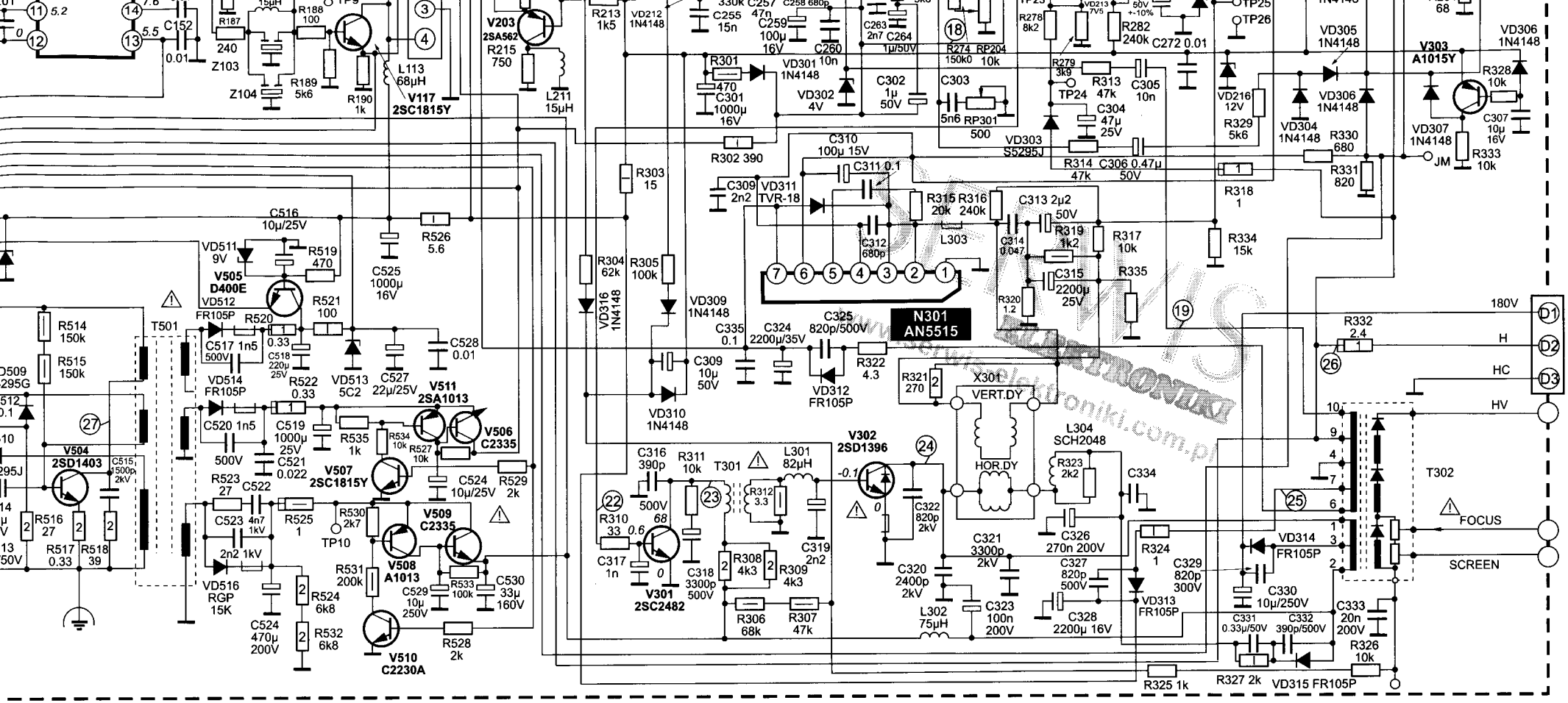

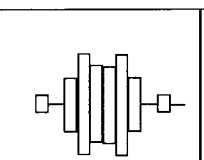	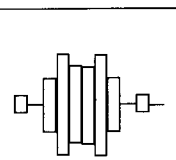	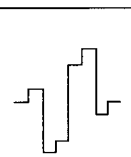	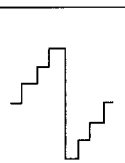		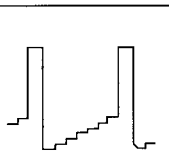	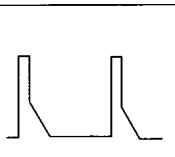	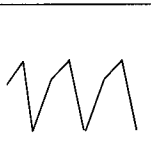
(9) 55mVp-p	(10) 56mVp-p	(11) 2.8Vp-p	(12) 1.6Vp-p	(13) 3Vp-p	(14) 7.6Vp-p	(15) 8Vp-p	(16) 3Vp-p
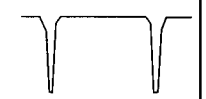		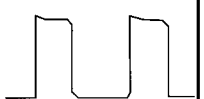	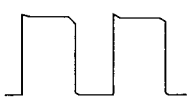		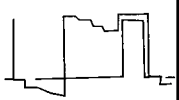		
(25) 200Vp-p	(26) 25Vp-p	(27) 270Vp-p	(28) 270Vp-p	(30) 130Vp-p	(31) 110Vp-p	(32) 120Vp-p	

W_SE5/2004

OTVC Lexus XT5656S

(strona 1/2)

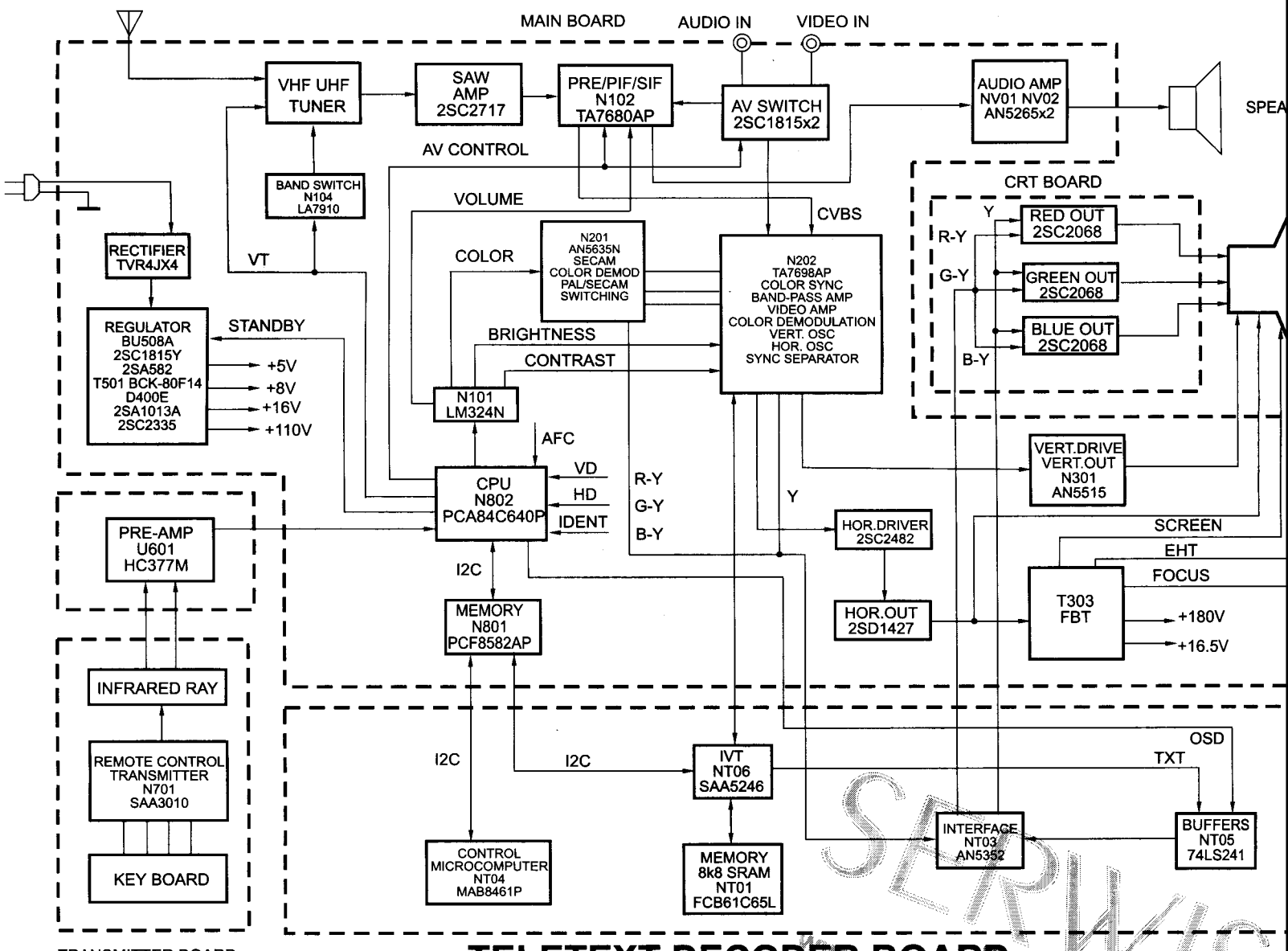

SERWIS ELEKTRONIKI
www.serwis-elektroniki.com.pl

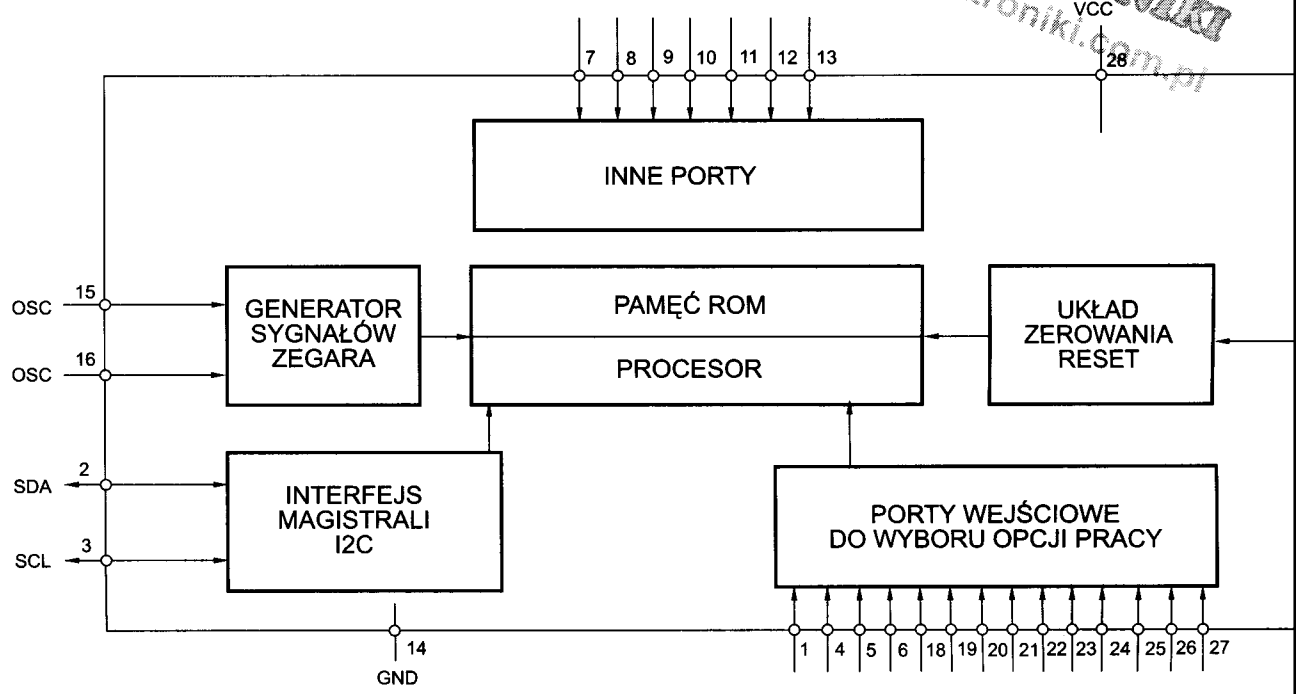

SCHEMAT BLOKOWY UKŁADU PCF84C81P/039, C81A/CTV972

TA7698AP

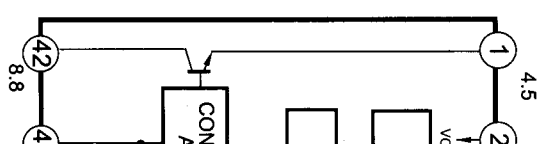

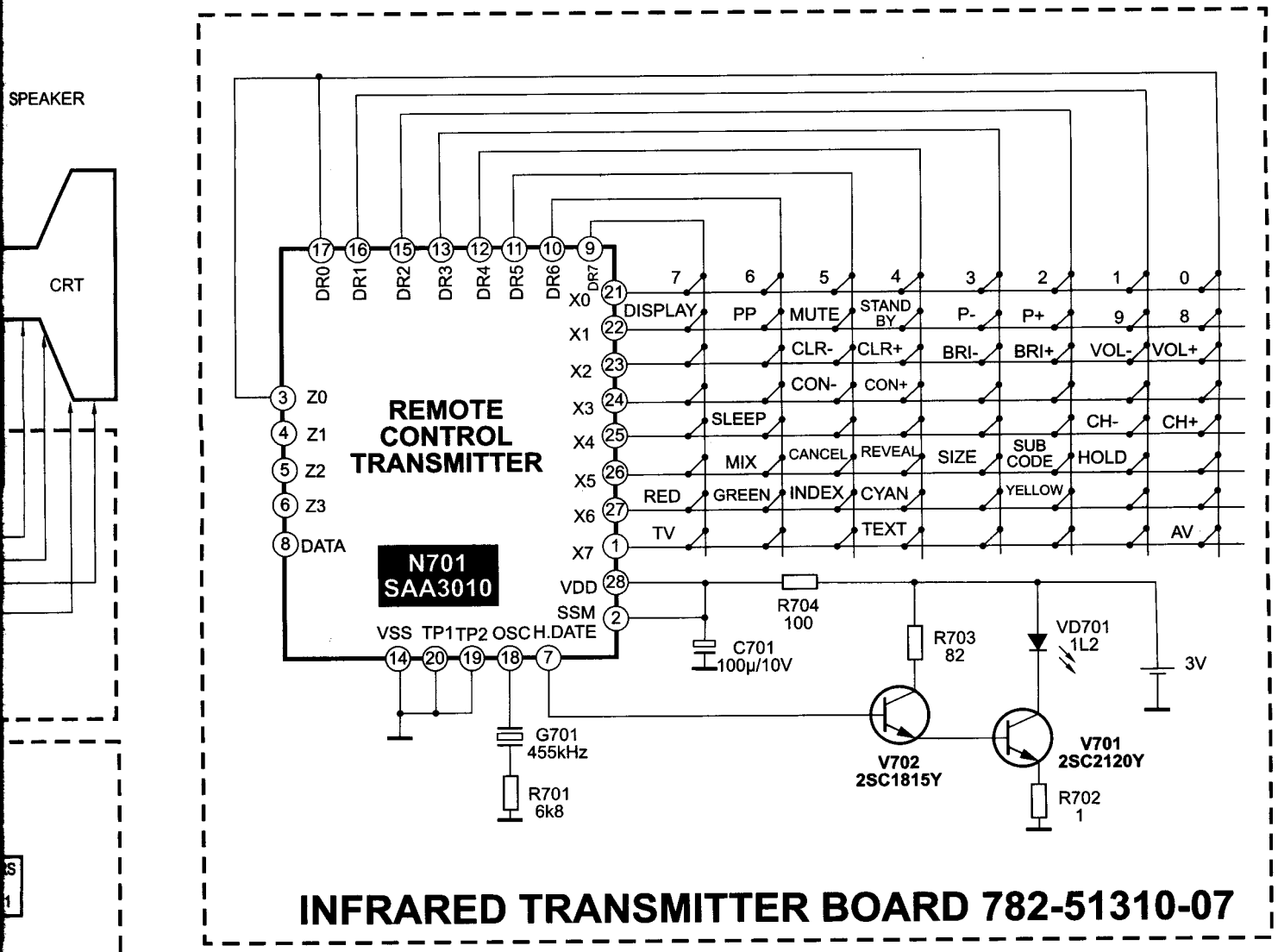
SPEAKER
CRT
REMOTE CONTROL TRANSMITTER
N701
SAA3010
DR0 DR1 DR2 DR3 DR4 DR5 DR6 DR7
X0 DISPLAY 7 PP 6 MUTE 5 STAND BY 4 P- 3 P+ 2 9 1 8 0
X1 CLR- CLR+ BRI- BRI+ VOL- VOL+
X2 CON- CON+
X3 SLEEP CH- CH+
X4 MIX CANCEL REVEAL SIZE SUB CODE HOLD
X5 RED GREEN INDEX CYAN YELLOW
X6 TV TEXT AV
X7
Z0 Z1 Z2 Z3 DATA
VDD SSM
VSS TP1 TP2 OSC H.DATE
R704 100
C701 100µ/10V
R703 82
VD701 1L2
3V
G701 455kHz
R701 6k8
V702 2SC1815Y
V701 2SC2120Y
R702 1
INFRARED TRANSMITTER BOARD 782-51310-07
17
RESET
782-51500-0200
C401 220
R401 5k6
V401 C1815Y
C402 47µ 16V
R402 8k2
C403 150
R406 390
R403 120k
R404 15k
R405 2k7
V402 C2068
V403 C1815Y
R407 180
VD401 1S1555
C406 470
C404 820
R408 100
R409 150
RP401 5k
R412 15k
C405 220
R410 5k6
V404 C1815Y
C407 150
R411 470
R413 2k7
V405 C2068
VD402 1S1555
R414 180
V406 C1815Y
X402
YS
R
G
B
C408 220
V407 C1815Y
R418 5k6
C411 150
C413 220
R420
C412 470
C409 820
R415 100
RP402 200
RP403 5k
R422 15k
R421 2k7
V408
CRT
HV
C415 2200 2kV

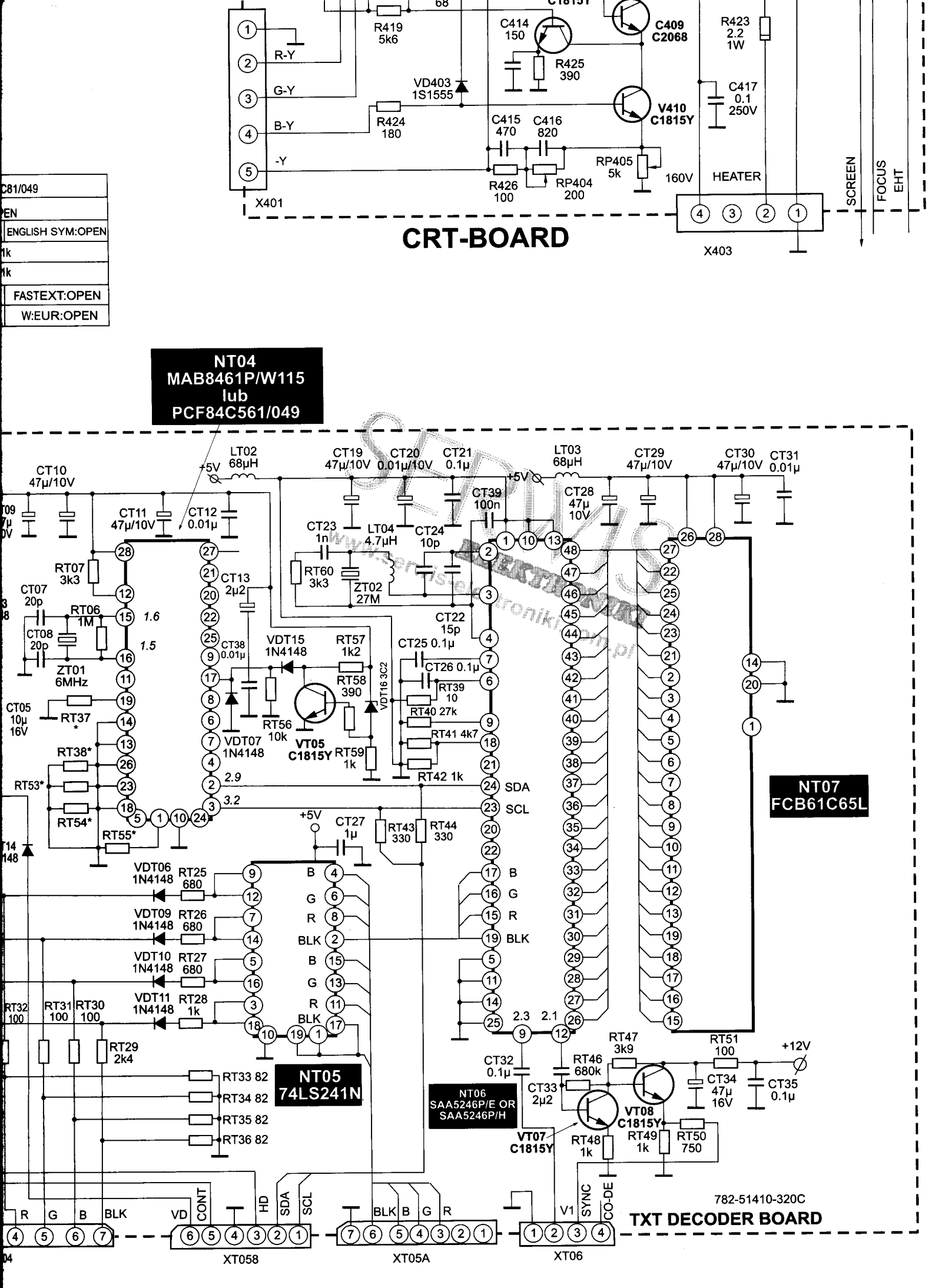

CRT-BOARD
X401
X403
R-Y
G-Y
B-Y
-Y
R419 5k6
R424 180
VD403 1S1555
C414 150
R425 390
C409 C2068
V410 C1815Y
C415 470
C416 820
R426 100
RP404 200
RP405 5k
R423 2.2 1W
C417 0.1 250V
160V
HEATER
SCREEN
FOCUS
EHT
C81/049
EN
ENGLISH SYM:OPEN
1k
1k
FASTEXT:OPEN
W:EUR:OPEN
NT04 MAB8461P/W115 lub PCF84C561/049
NT07 FCB61C65L
NT05 74LS241N
NT06 SAA5246P/E OR SAA5246P/H
VT05 C1815Y
VT07 C1815Y
VT08 C1815Y
VDT15 1N4148
VDT07 1N4148
VDT16 3C2
VDT06 1N4148
VDT09 1N4148
VDT10 1N4148
VDT11 1N4148
LT02 68µH
LT03 68µH
LT04 4.7µH
ZT01 6MHz
ZT02 27M
CT10 47µ/10V
CT11 47µ/10V
CT12 0.01µ
CT13 2µ2
CT19 47µ/10V
CT20 0.01µ/10V
CT21 0.1µ
CT22 15p
CT23 1n
CT24 10p
CT25 0.1µ
CT26 0.1µ
CT27 1µ
CT28 47µ 10V
CT29 47µ/10V
CT30 47µ/10V
CT31 0.01µ
CT32 0.1µ
CT33 2µ2
CT34 47µ 16V
CT35 0.1µ
CT38 0.01µ
CT39 100n
CT05 10µ 16V
RT07 3k3
RT06 1M
RT37 *
RT38*
RT53*
RT54*
RT55*
RT57 1k2
RT58 390
RT59 1k
RT56 10k
RT60 3k3
RT39 10
RT40 27k
RT41 4k7
RT42 1k
RT43 330
RT44 330
RT25 680
RT26 680
RT27 680
RT28 1k
RT29 2k4
RT30 100
RT31 100
RT32 100
RT33 82
RT34 82
RT35 82
RT36 82
RT46 680k
RT47 3k9
RT48 1k
RT49 1k
RT50 750
RT51 100
+12V
+5V
SDA
SCL
B
G
R
BLK
VD
CONT
HD
SYNC
CO-DE
V1
XT058
XT05A
XT06
782-51410-320C
TXT DECODER BOARD

NOTE:

NT04-UNR OPTIONS(*)

TERMS	MAB 8461P/W115		PCF 84C81/049	
PIN27	TO GND		OPEN	
RT37	EYR SYM:100	ENGLISH SYM. OPEN	EUR:SYM: 1k	ENGLISH SY
RT38	100		1k	
RT53	100		1k	
RT54	UST:100	FASTEXT:OPEN	UST:1k	FASTEXT
RT55	TO GND		E EUR:1k	W:EUR:

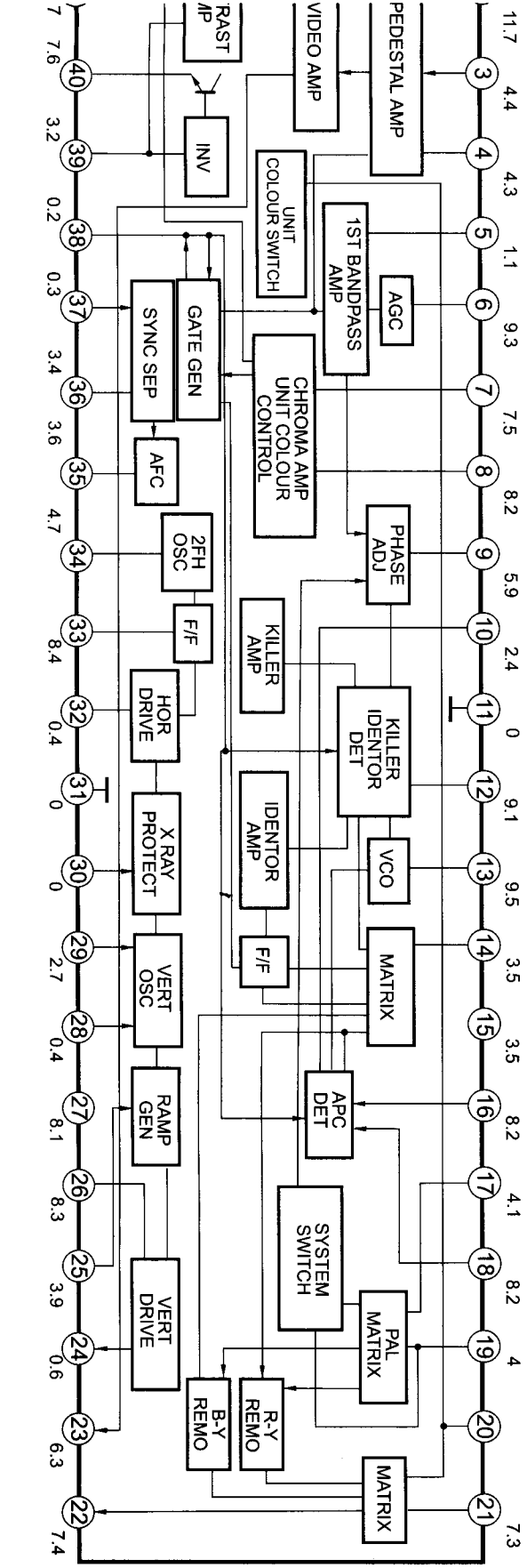

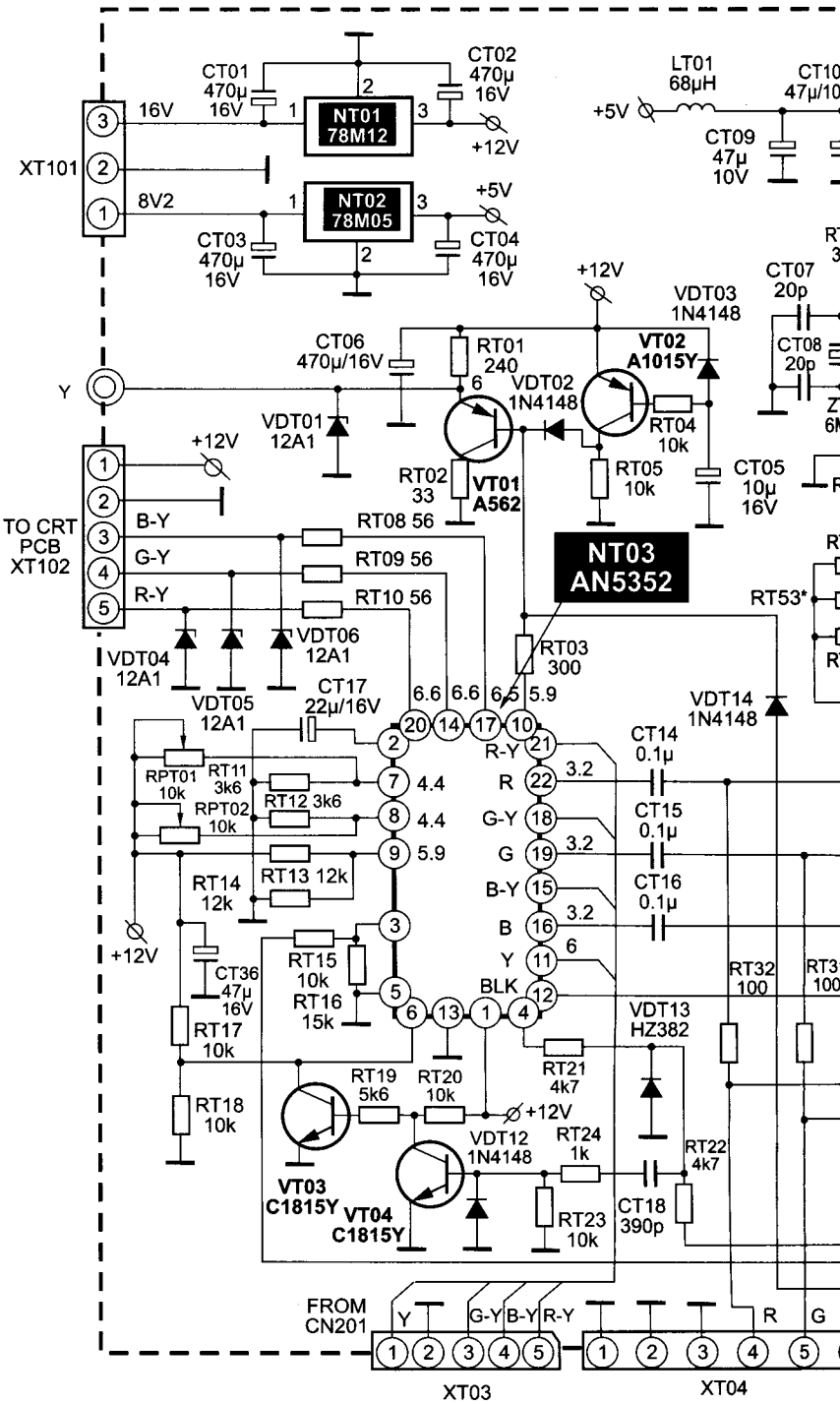

W_SE5/2004

OTVC Lexus XT5656S

(strona 2/2)