ЗАКАЗ И ITD9502003C2

СЕРВИСНАЯ ИНСТРУКЦИЯ

Цветной телевизор

TX–32WG15X

Шасси M17W

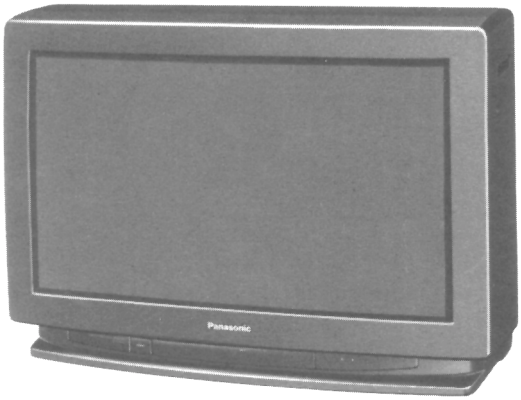

ТЕХНИЧЕСКИЕ ХАРАКТЕРИСТИКИ
РАСПОЛОЖЕНИЕ ОРГАНОВ УПРАВЛЕНИЯ И ПЕЧАТНЫХ ПЛАТ
РАСПОЛОЖЕНИЕ ЖГУТОВ
ПРИНЦИПИАЛЬНЫЕ СХЕМЫ
- **Контроллер пульта ДУ EUR501105**
- **Плата P, D**
- **Плата A**
- **Плата Y1**
- **Плата R, K1**
- **Плата H**
- **Плата B**
- **Плата B3**
- **Плата N**
- **Плата Z**
- **Плата X1**
- **Плата X2**
- **Плата L**
- **Плата F**
- **Плата G**
- **Плата T**
- **Таблица сигналограмм**

РАСПОЛОЖЕНИЕ ДЕТАЛЕЙ И ПЕРЕЧЕНЬ МЕХАНИЧЕСКИХ ЗАПАСНЫХ ЧАСТЕЙ
ПЕРЕЧЕНЬ ЗАПАСНЫХ ЧАСТЕЙ

Panasonic

© 1995 Matsushita Electric Industrial Co., Ltd.
Несанкционированное копирование и распространение является нарушением закона.

Контроллер пульта ДУ EUR501105

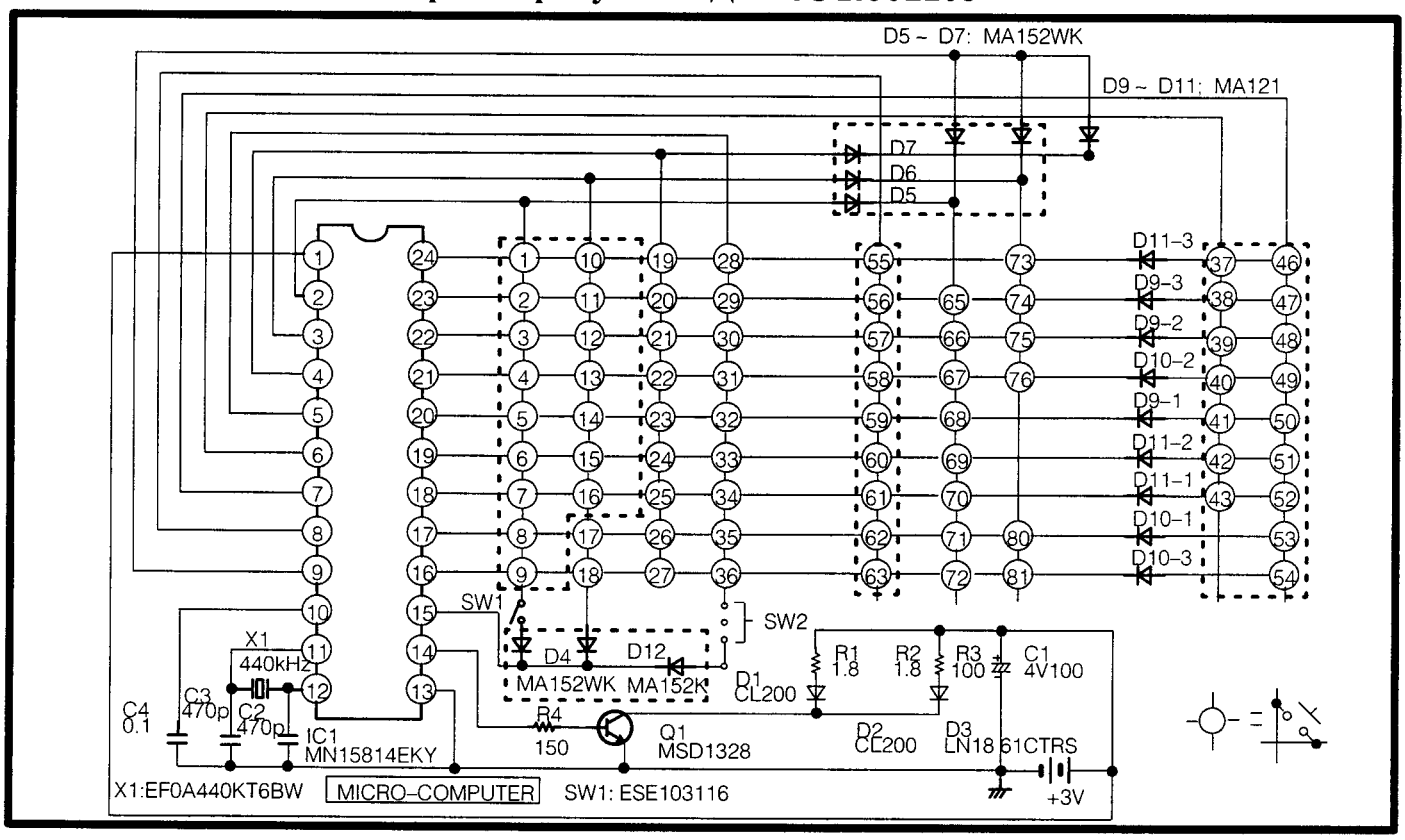

Функциональная таблица клавишей

Key No.	Data Code	Function	Key No.	Data Code	Function	Key No.	Data Code	Function
1	17	8	26	34	VCR CH UP	53	17	8
2	18	9	27	35	VCR CH DOWN	54	18	9
3	19	0	28	33	∞/∇ I / II	55	1C	REVERAL
4	03	TV / TEXT	29	31	SURROUND	56	1E	RESET
5	05	F. P.	30	0F	OFF TIMER	57	08	INDEX
6	09	HOLD	31	3D	POWER ON/OFF	58	0C	F/T/B
7	0B	TIME TEXT	32	DE	WIDE	59	1D	LIST/F.TEXT
8	04	DISPLAY CANCEL	33	32	MUTE	60	76	COLOUR KEY(RED)
9	0A	LIST STORE	34	05	TV/AV	61	71	COLOUR KEY(GRN)
10	16	7	35	4A	CURSOR UP	62	72	COLOUR KEY(YEW)
11	15	6	36	4B	CURSOR DOWN	63	73	COLOUR KEY(CYN)
12	10	1	37	39	RECALL	65	5D	PIP ON/OFF
13	11	2	38	19	0	66	56	MODE
14	12	3	39	3B	2 DIGIT –/ —	67	5E	CHANGE
15	13	4	40	20	VOL +	68	64	PIP CH UP
16	14	5	41	21	VOL –	69	A8	SOUND SWAP
17	3D	VCR (Power on/off)	42	34	POS UP	70	61	SEARCH
18	36	TV/VCR(ANT SEL.)	43	35	POS DOWN	71	5C	STILL
19	08	RECORD	46	10	1	72	65	PIP CH DOWN
20	06	PAUSE/STILL	47	11	2	73	52	MAIN MENU
21	00	STOP	48	12	3	74		
22	0C	FRAME ADV	49	13	4	75	51	SOUND MENU
23	02	REW	50	14	5	76	0C	NORMAL N
24	03	FF	51	15	6	80	4E	CURSOR LEFT
25	0A	PLAY BACK	52	16	7	81	4F	CURSOR RIGHT

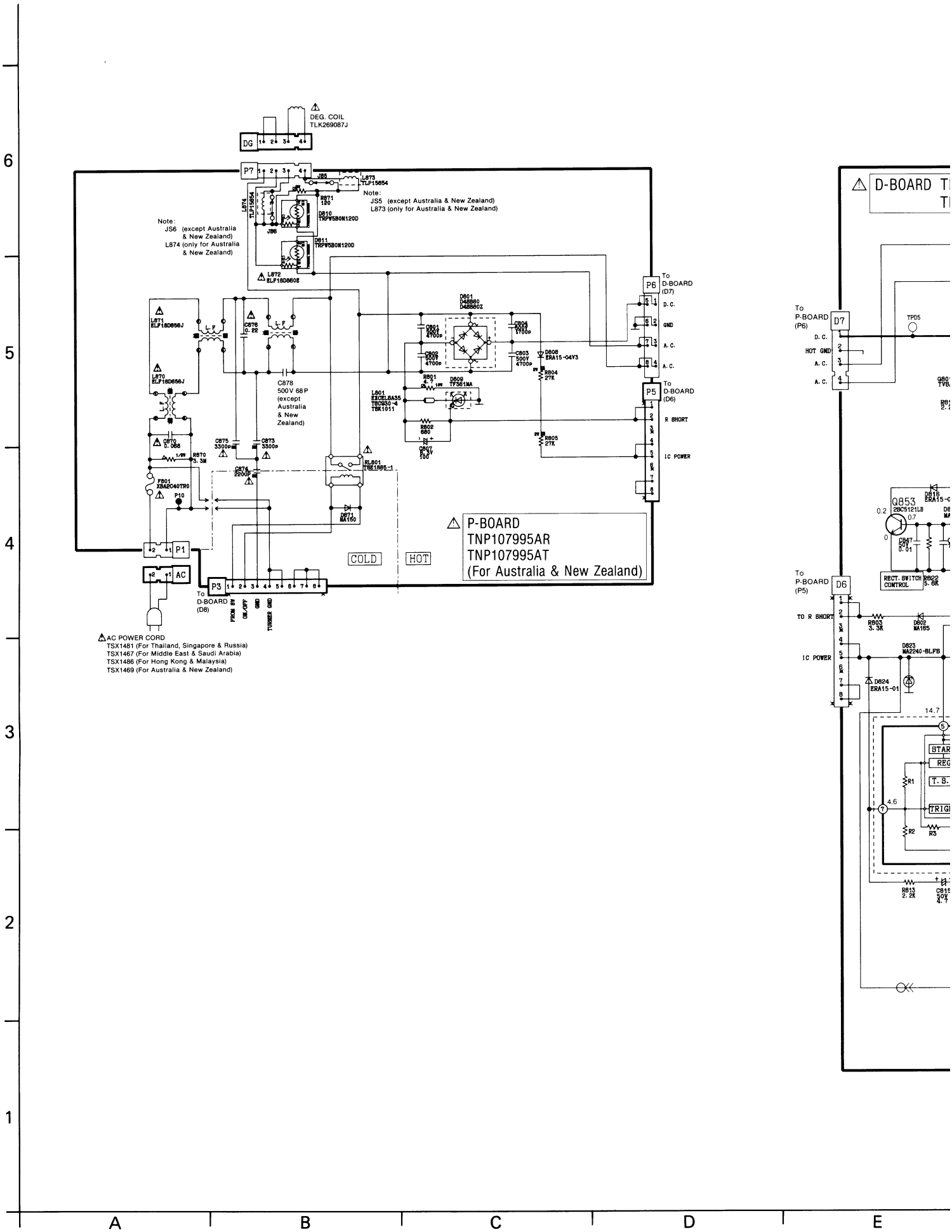

DEG. COIL
TLK269087J
DG
P7
Note:
JS5 (except Australia & New Zealand)
L873 (only for Australia & New Zealand)
Note:
JS6 (except Australia & New Zealand)
L874 (only for Australia & New Zealand)
L872
ELF18D860E
L871
ELF18D856J
L870
ELF18D856J
C876
0.22
C878
500V 68P
(except Australia & New Zealand)
C870
0.068
R870
3.3M
F801
XBA2C40TR0
P10
C875
3300p
C873
3300p
C874
2200p
RL801
TSE1865-1
D871
MA150
D801
D48B80
D48B80Z
C801
500V
4700p
C802
500V
4700p
C804
500V
4700p
C803
500V
4700p
D808
ERA15-04V3
R804
27K
R801
4.7
D809
TF361MA
L801
EXCEL8A35
TSC930-4
TSK1011
R802
680
C807
5.3V
100
R805
27K
P6
To D-BOARD (D7)
D.C.
GND
A.C.
A.C.
P5
To D-BOARD (D6)
R SHORT
IC POWER
P1
AC
P3
To D-BOARD (D8)
FROM SW
ON/OFF
GND
TURNER GND
COLD
HOT
P-BOARD
TNP107995AR
TNP107995AT
(For Australia & New Zealand)
AC POWER CORD
TSX1481 (For Thailand, Singapore & Russia)
TSX1467 (For Middle East & Saudi Arabia)
TSX1486 (For Hong Kong & Malaysia)
TSX1469 (For Australia & New Zealand)
D-BOARD
To P-BOARD (P6)
D7
D.C.
HOT GND
A.C.
A.C.
TPD5
Q853
2SC5121LB
RECT. SWITCH CONTROL
R822
5.6K
To P-BOARD (P5)
D6
TO R SHORT
IC POWER
R803
3.3K
D802
MA165
D823
MA2240-BLFB
D824
ERA15-01
14.7
STAR
REG
T.S.
TRIG
R1
R2
R3
4.6
R813
2.2K
C815
50V
4.7

BOARD TNP117044AD
TNP117044AF (For Australia & New Zealand)

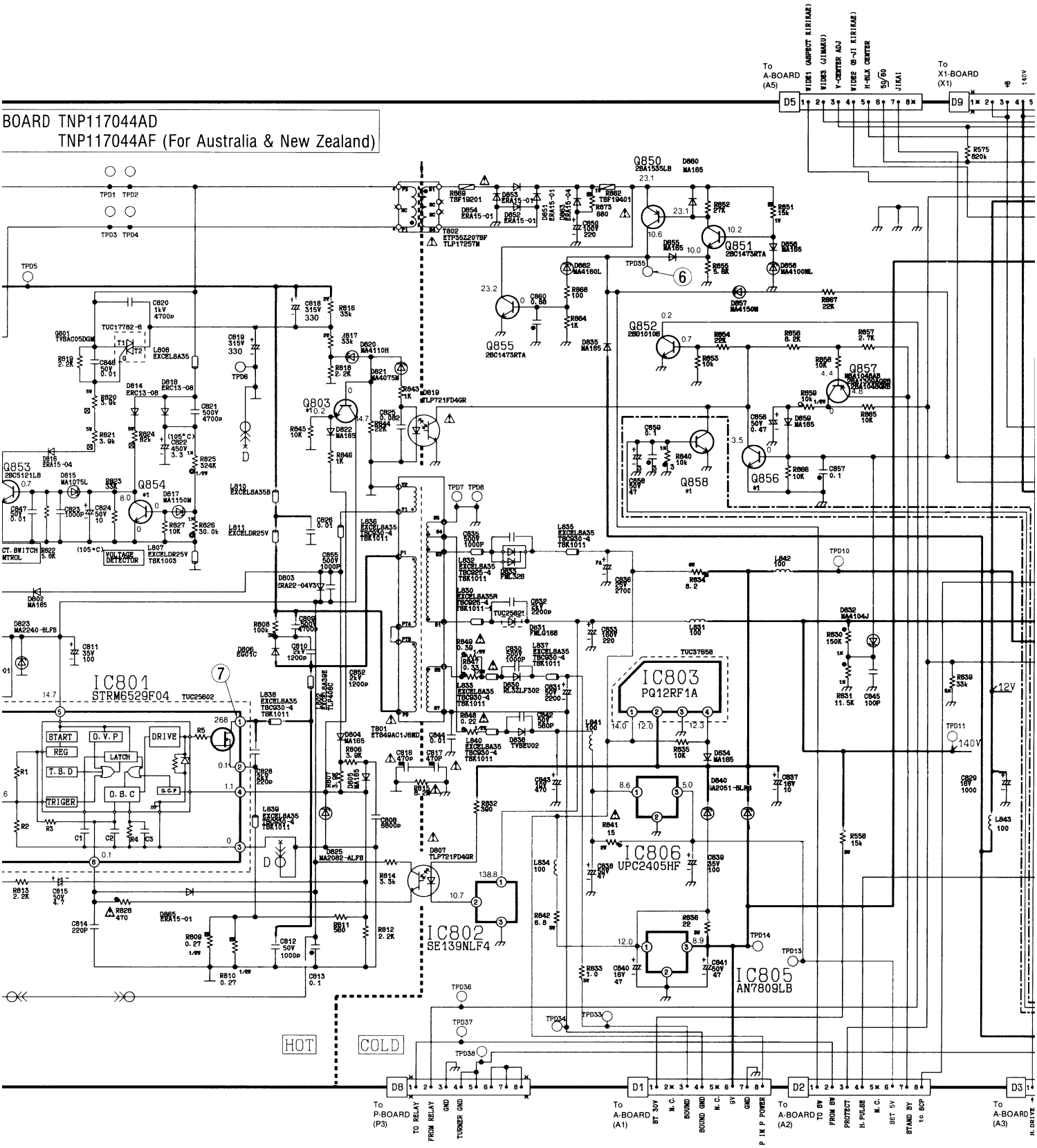

F G H I J

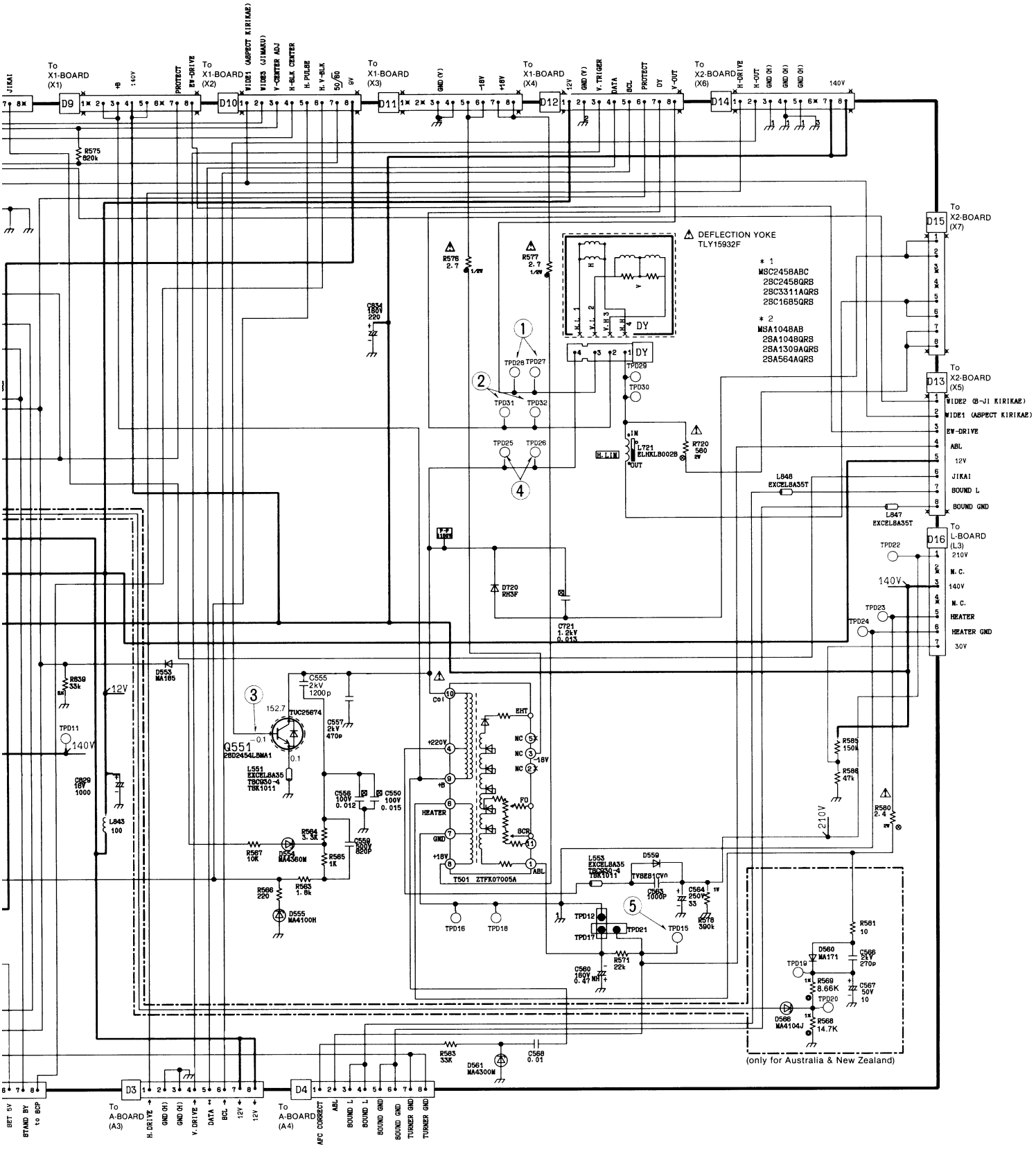
To X1-BOARD (X1)
To X1-BOARD (X2)
To X1-BOARD (X3)
To X1-BOARD (X4)
To X2-BOARD (X6)
To X2-BOARD (X7)
To X2-BOARD (X5)
To L-BOARD (L3)
To A-BOARD (A3)
To A-BOARD (A4)
DEFLECTION YOKE
TLY15932F
* 1
MSC2458ABC
2SC2458QRS
2SC3311AQRS
2SC1685QRS
* 2
MSA1048AB
2SA1048QRS
2SA1309AQRS
2SA564AQRS
WIDE2 (B-JI KIRIKAE)
WIDE1 (ASPECT KIRIKAE)
EW-DRIVE
ABL
12V
JIKAI
SOUND L
SOUND GND
N.C.
140V
HEATER
HEATER GND
30V
210V
Q551
2SD2454LBMA1
T501 ZTFK07005A
(only for Australia & New Zealand)

J K L M N

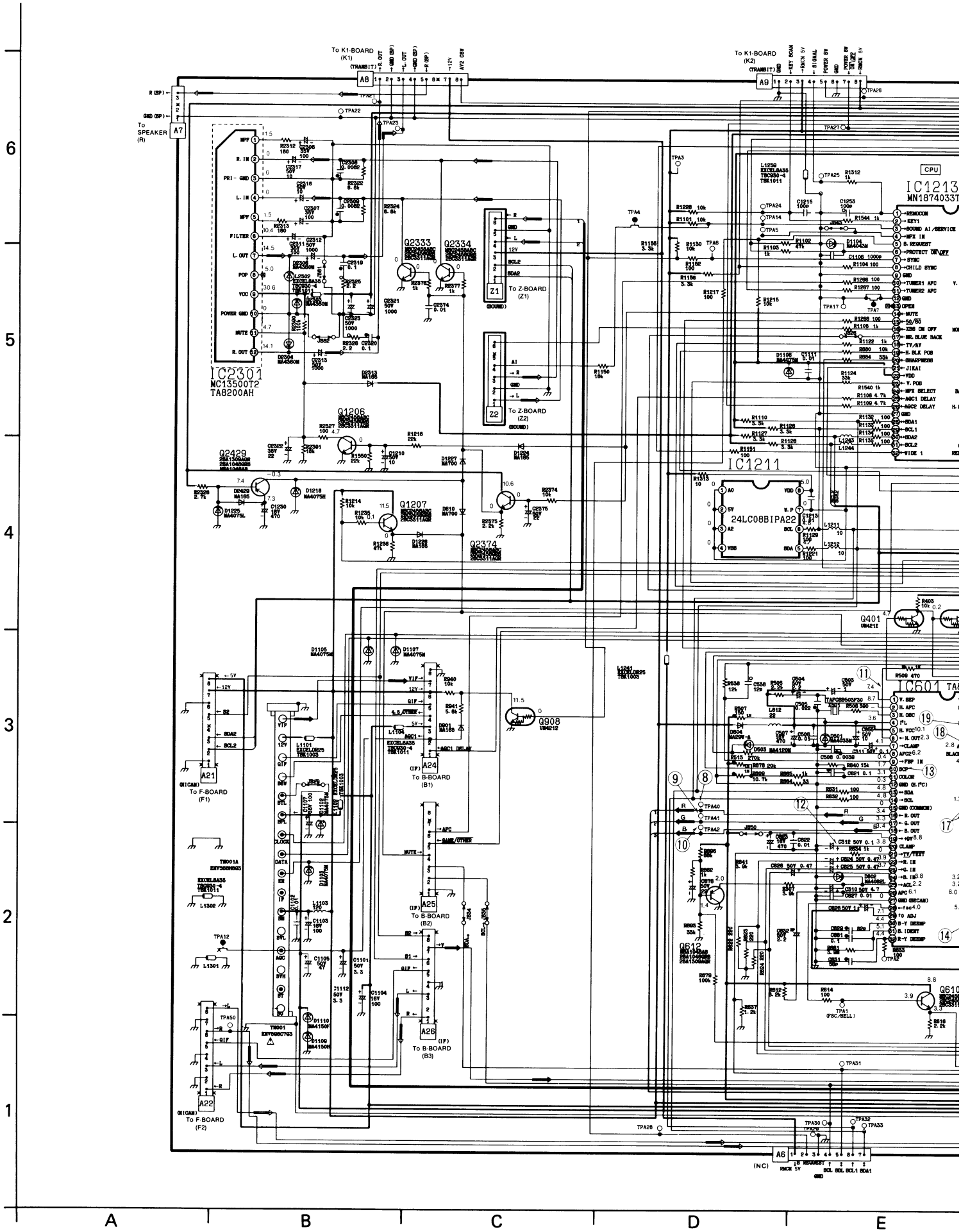
To K1-BOARD (K1)
To K1-BOARD (K2)
To SPEAKER (R)
IC2301
MC13500T2
TA8200AH
IC1213
MN1874033T
CPU
IC1211
24LC08B1PA22
IC601
To Z-BOARD (Z1)
To Z-BOARD (Z2)
To F-BOARD (F1)
To F-BOARD (F2)
To B-BOARD (B1)
To B-BOARD (B2)
To B-BOARD (B3)
Q2333
Q2334
Q1206
Q1207
Q2429
Q2374
Q908
Q401
Q610
Q612
A7
A8
A9
A6
A21
A22
A24
A25
A26
Z1
Z2
6
5
4
3
2
1
A
B
C
D
E

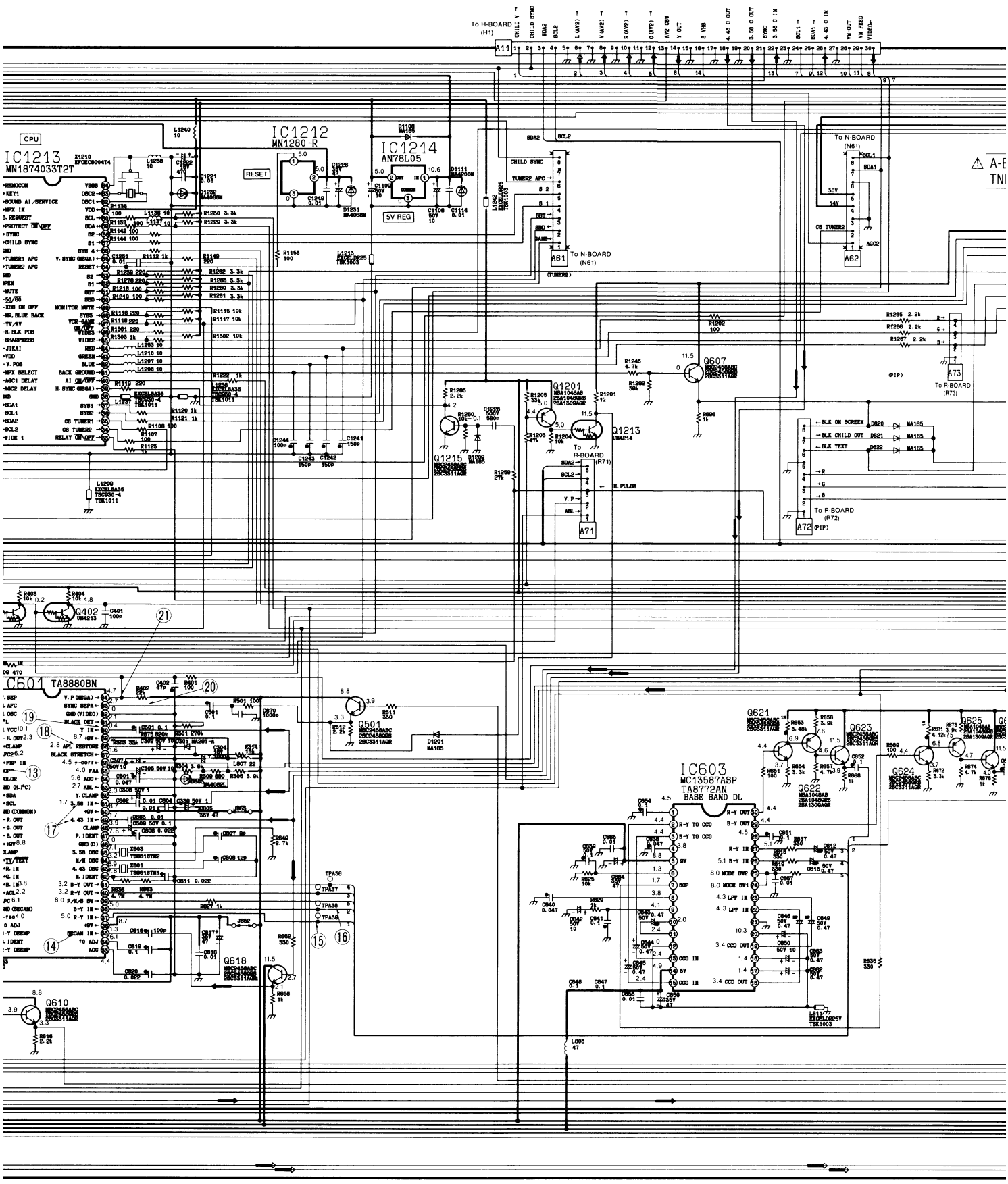
IC1213
MN1874033T2T
CPU
IC1212
MN1280-R
RESET
IC1214
AN78L05
5V REG
To H-BOARD
(H1)
A11
To N-BOARD
(N61)
A61
A62
Q607
Q1201
Q1213
Q1215
To R-BOARD
(R71)
A71
To R-BOARD
(R72)
A72
To R-BOARD
(R73)
A73
Q402
IC601
TA8880BN
Q501
Q618
Q610
IC603
MC13587ASP
TA8772AN
BASE BAND DL
Q621
Q622
Q623
Q624
Q625
F
G
H
I
J

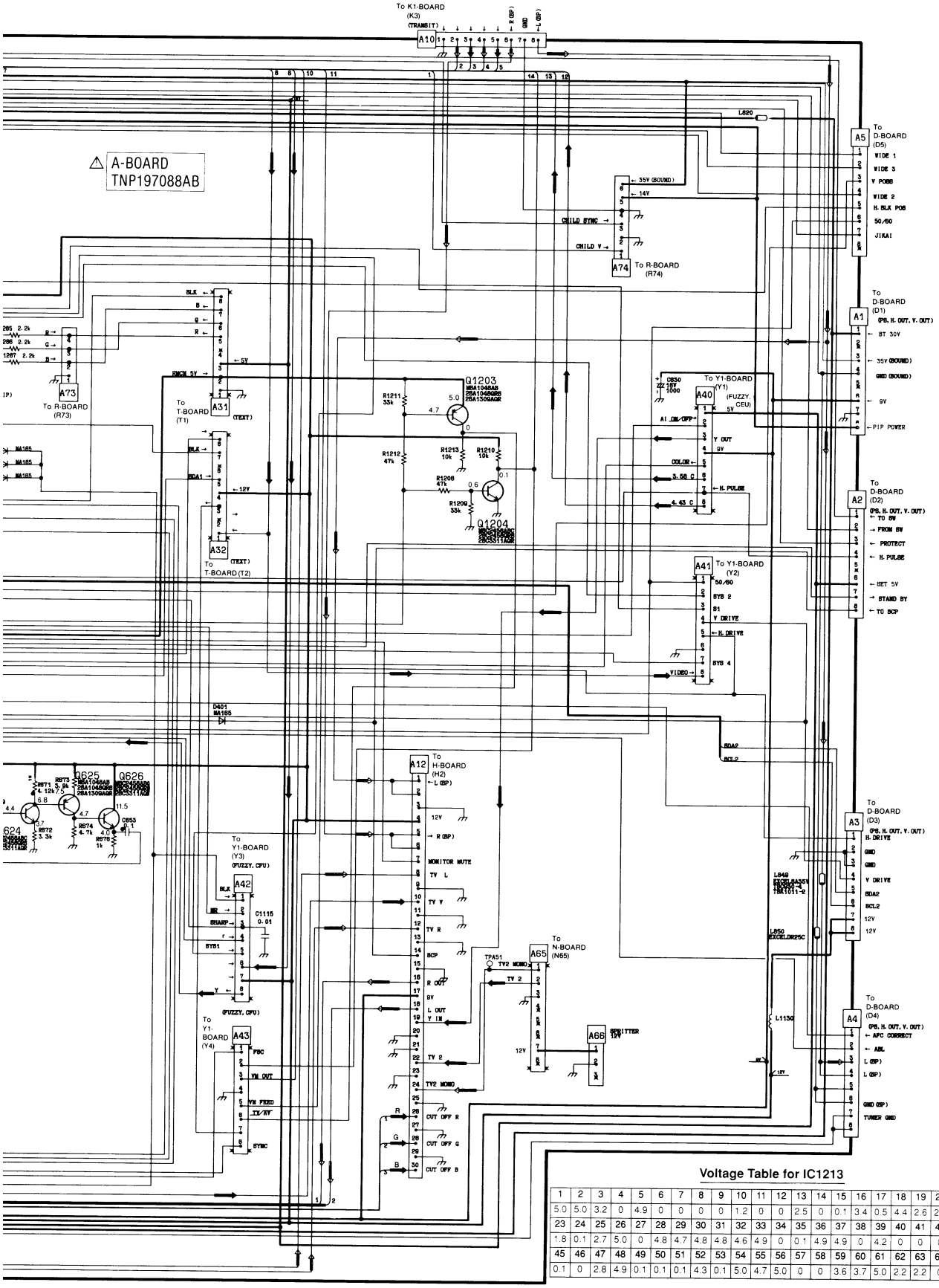

Voltage Table for IC1213

1	2	3	4	5	6	7	8	9	10	11	12	13	14	15	16	17	18	19	20	21	22
5.0	5.0	3.2	0	4.9	0	0	0	0	1.2	0	0	2.5	0	0.1	3.4	0.5	4.4	2.6	2.5	2.5	5.0
23	24	25	26	27	28	29	30	31	32	33	34	35	36	37	38	39	40	41	42	43	44
1.8	0.1	2.7	5.0	0	4.8	4.7	4.8	4.8	4.6	4.9	0	0.1	4.9	4.9	0	4.2	0	0	0	0	0
45	46	47	48	49	50	51	52	53	54	55	56	57	58	59	60	61	62	63	64		
0.1	0	2.8	4.9	0.1	0.1	0.1	4.3	0.1	5.0	4.7	5.0	0	0	3.6	3.7	5.0	2.2	2.2	0		

J K L M N

IC1213(MPU : MN1874033T2T)

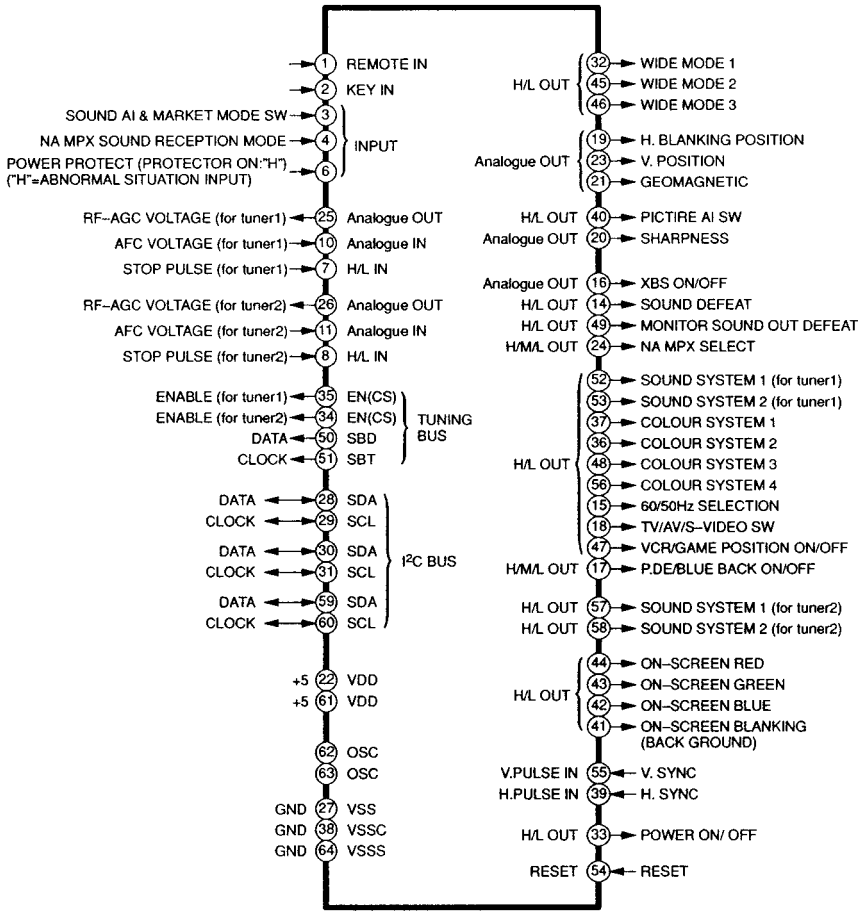

IC603(BASE BAND DL : TA8772AN)

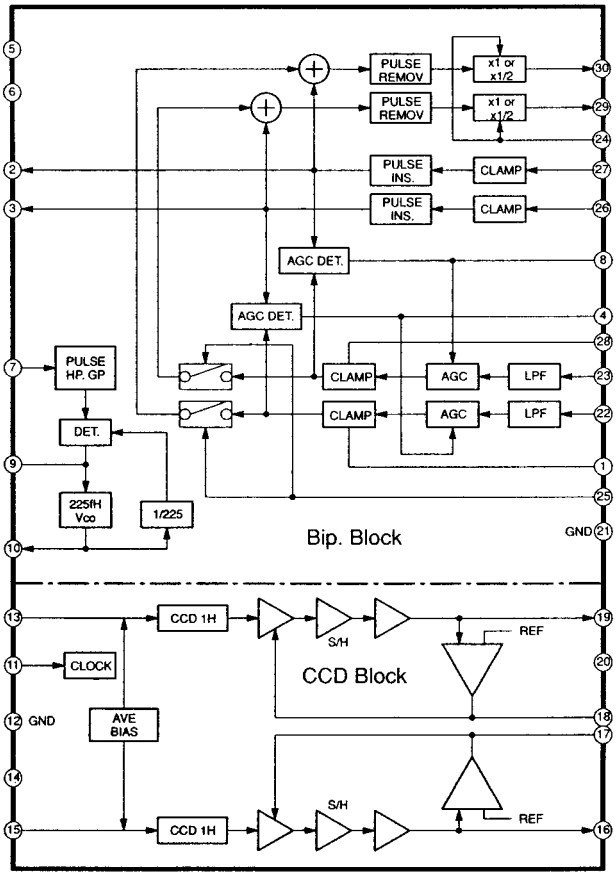

IC3301 (HORI. SHARPNESS : AN5342FBP)

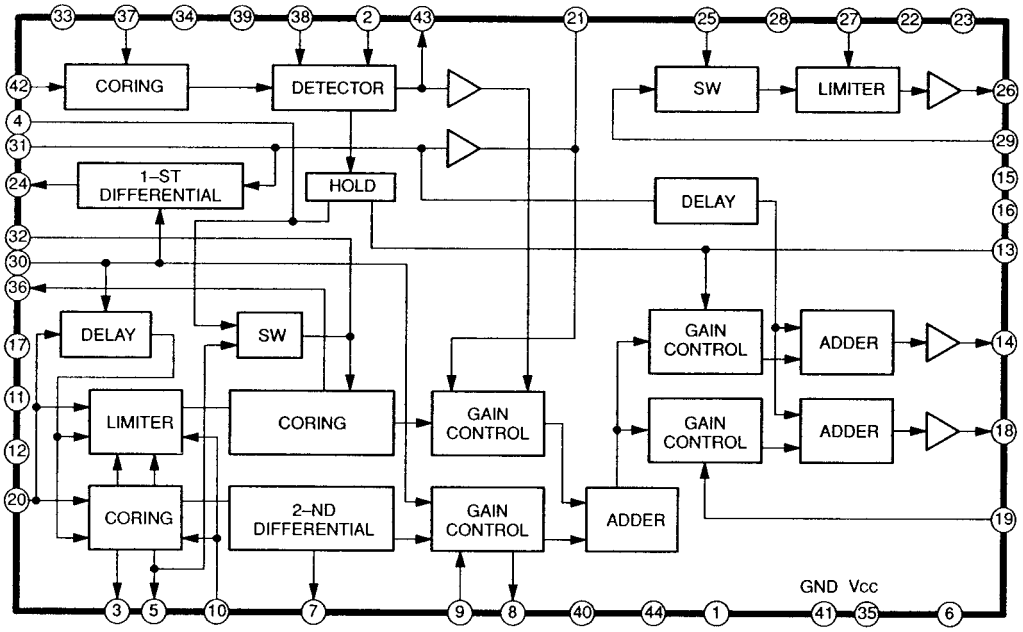

IC5504 (3 TO 8 LINE DECODER : SN74HC138NS)

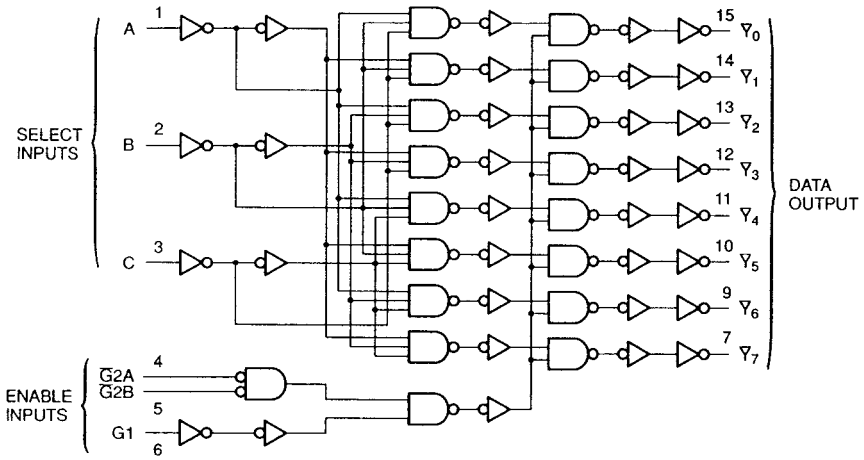

IC5501 (DIGITAL COMB FILTER : MN8236)

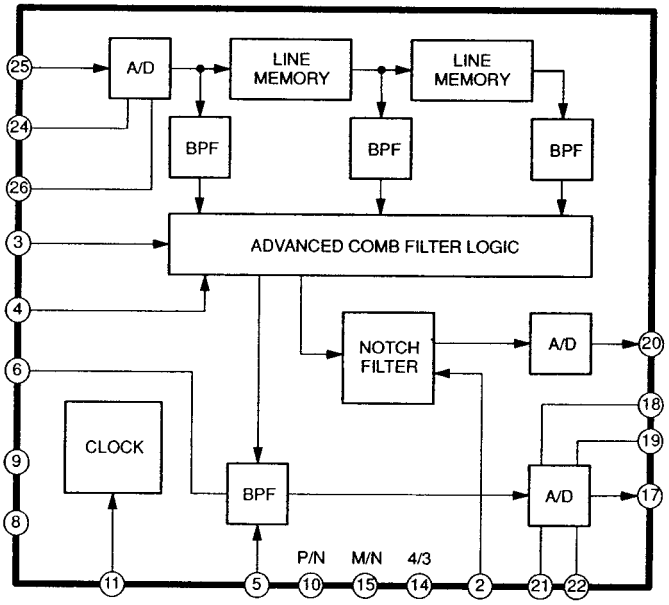

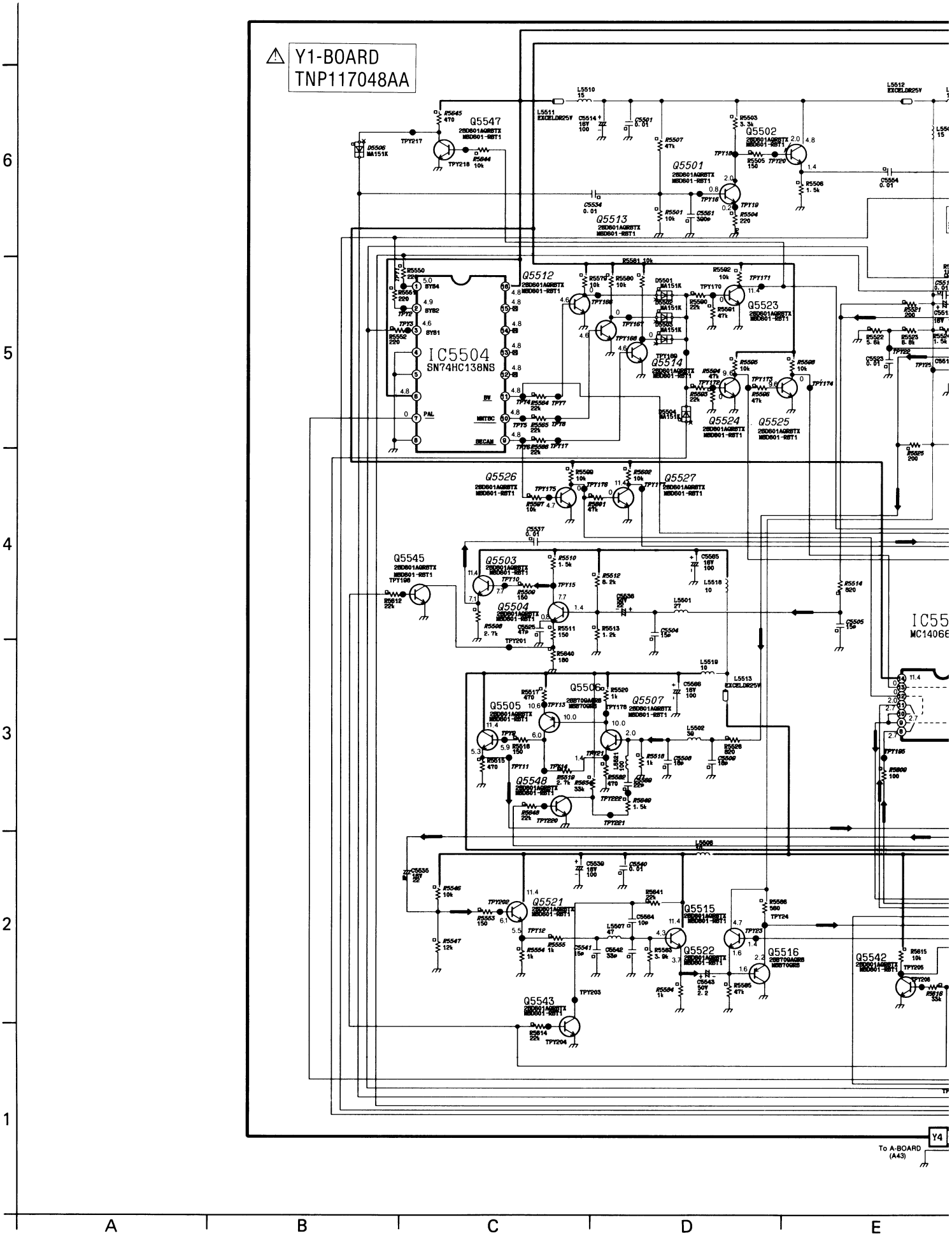
Y1-BOARD
TNP117048AA
IC5504
SN74HC138NS
Q5547
Q5501
Q5502
Q5513
Q5512
Q5514
Q5523
Q5524
Q5525
Q5526
Q5527
Q5545
Q5503
Q5504
Q5505
Q5506
Q5507
Q5548
Q5521
Q5515
Q5522
Q5516
Q5542
Q5543
To A-BOARD
(A43)
Y4

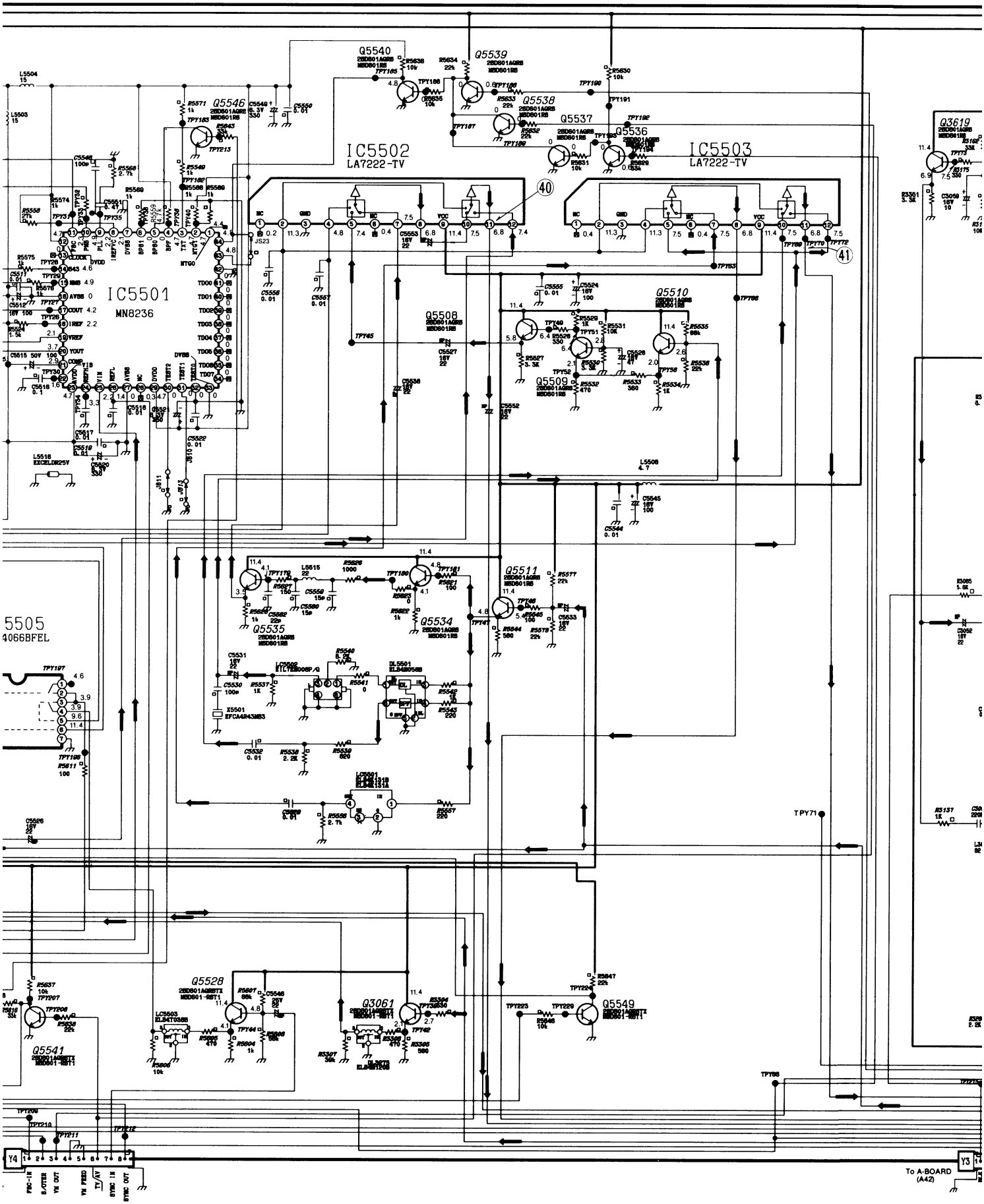
IC5502
LA7222-TV
IC5503
LA7222-TV
IC5501
MN8236
Q5540
Q5539
Q5538
Q5537
Q5536
Q5546
Q5508
Q5509
Q5510
Q5511
Q5534
Q5535
Q5528
Q5541
Q3061
Q5549
Q3619
To A-BOARD
(A42)

F G H I J

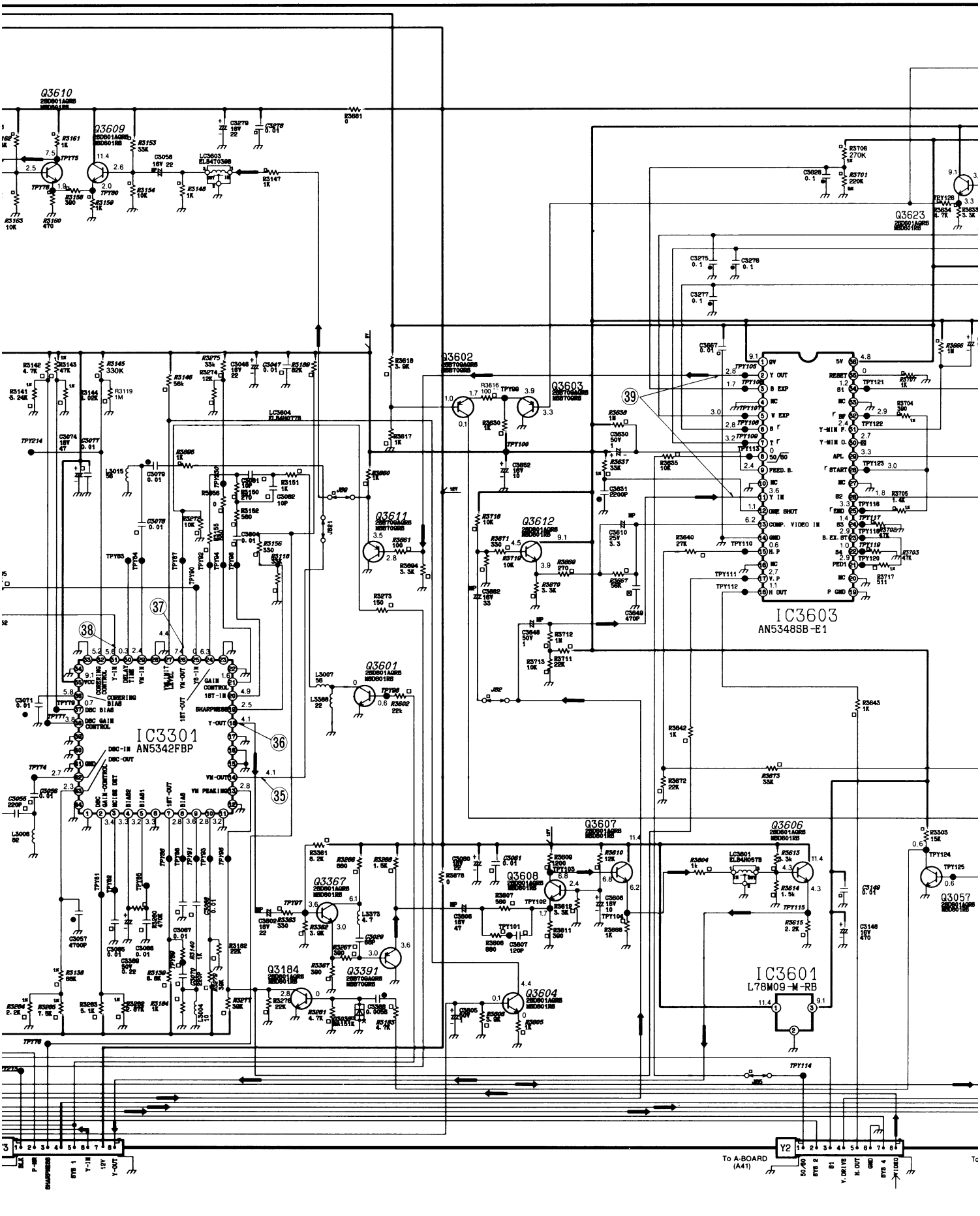
IC3301
AN5342FBP
IC3603
AN5348SB-E1
IC3601
L78M09-M-RB
Q3610
Q3609
Q3623
Q3602
Q3603
Q3611
Q3612
Q3601
Q3607
Q3606
Q3608
Q3367
Q3184
Q3391
Q3604
Q3057
To A-BOARD
(A41)
K
L
M
N
O

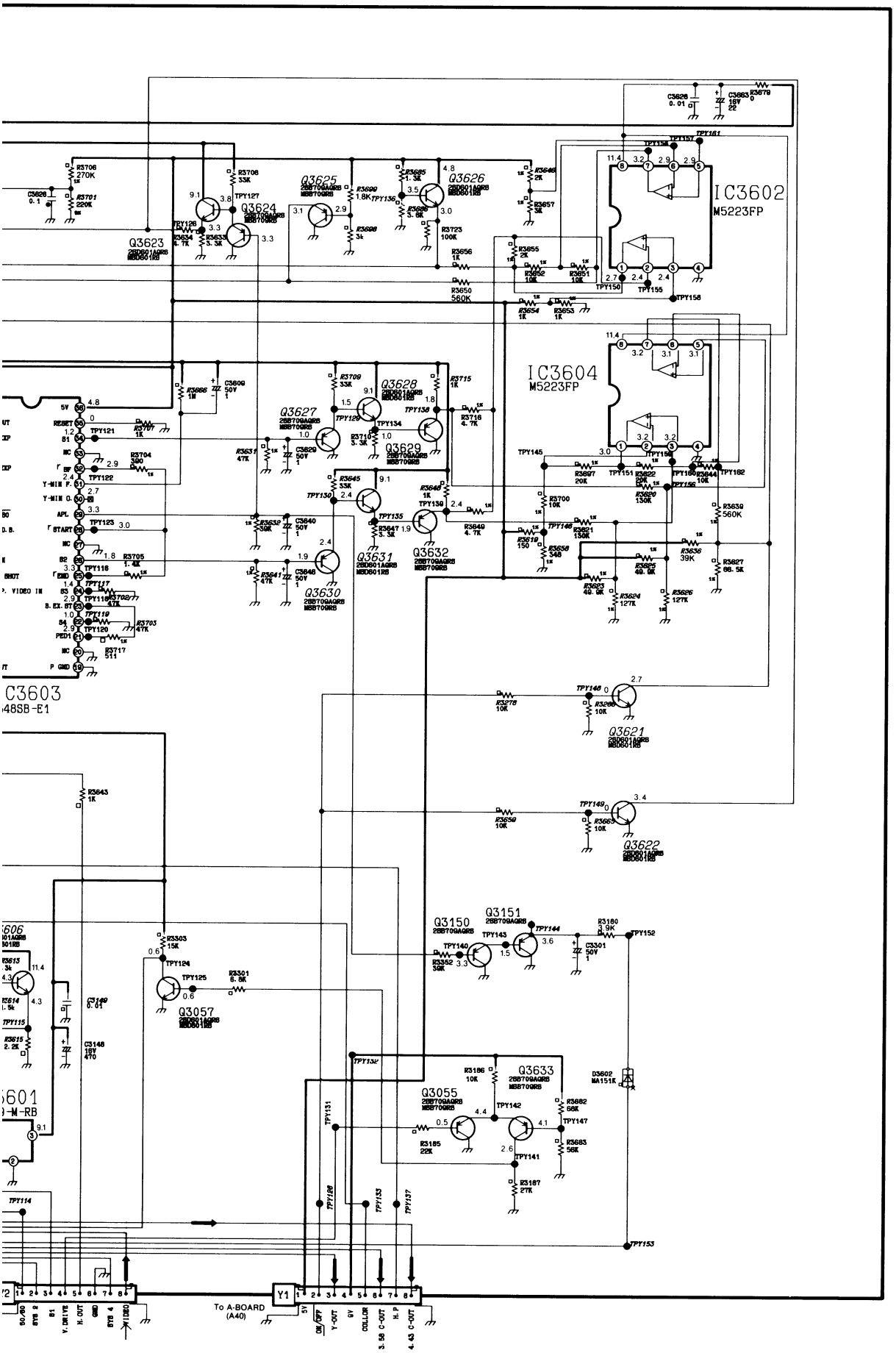
IC3602
M5223FP
IC3604
M5223FP
Q3623
Q3624
Q3625
Q3626
Q3627
Q3628
Q3629
Q3630
Q3631
Q3632
Q3621
Q3622
Q3150
Q3151
Q3057
Q3633
Q3055
D3602
MA151K
To A-BOARD
(A40)
Y1
O
P
Q
R

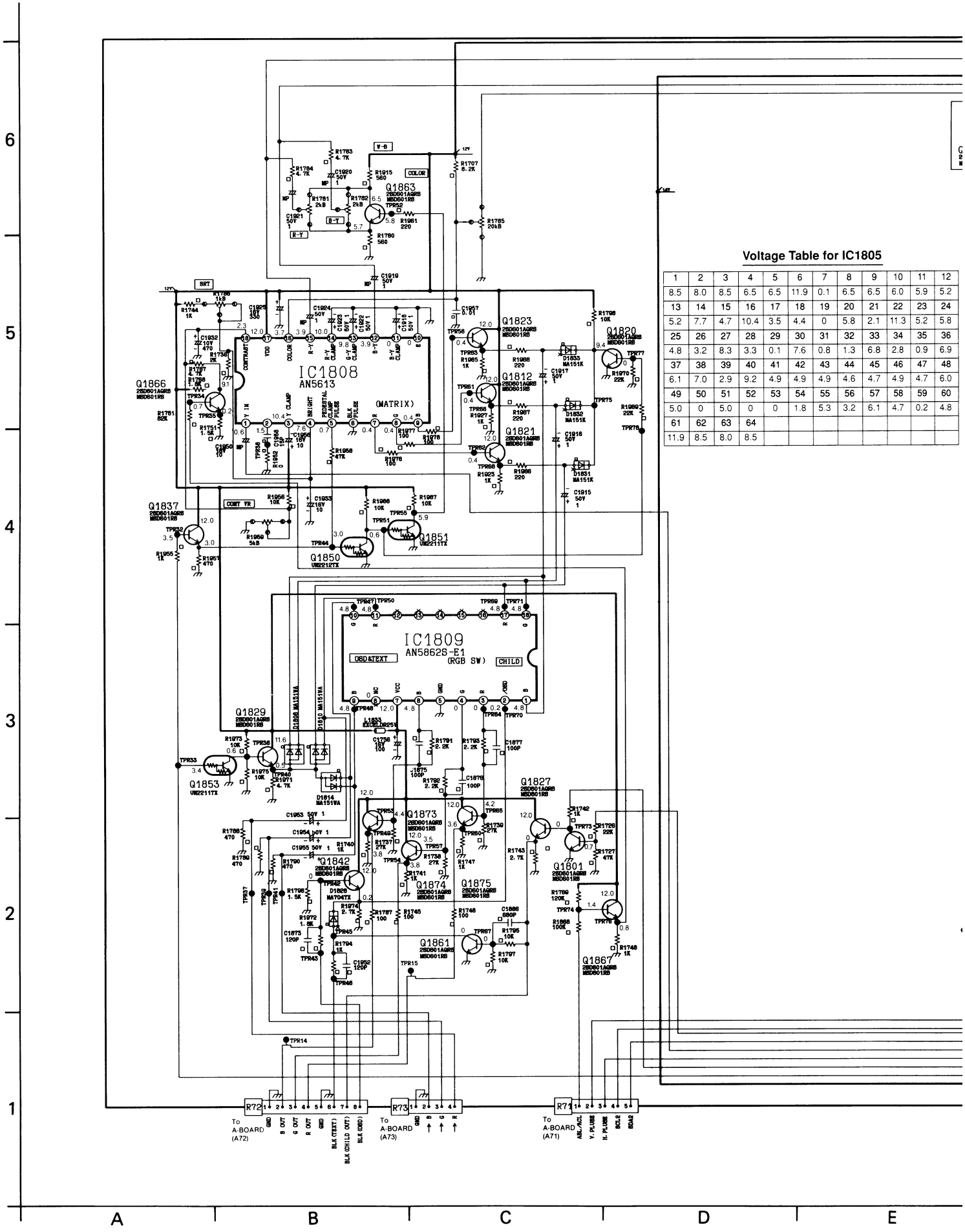

Voltage Table for IC1805

1	2	3	4	5	6	7	8	9	10	11	12
8.5	8.0	8.5	6.5	6.5	11.9	0.1	6.5	6.5	6.0	5.9	5.2
13	14	15	16	17	18	19	20	21	22	23	24
5.2	7.7	4.7	10.4	3.5	4.4	0	5.8	2.1	11.3	5.2	5.8
25	26	27	28	29	30	31	32	33	34	35	36
4.8	3.2	8.3	3.3	0.1	7.6	0.8	1.3	6.8	2.8	0.9	6.9
37	38	39	40	41	42	43	44	45	46	47	48
6.1	7.0	2.9	9.2	4.9	4.9	4.9	4.6	4.7	4.9	4.7	6.0
49	50	51	52	53	54	55	56	57	58	59	60
5.0	0	5.0	0	0	1.8	5.3	3.2	6.1	4.7	0.2	4.8
61	62	63	64								
11.9	8.5	8.0	8.5								

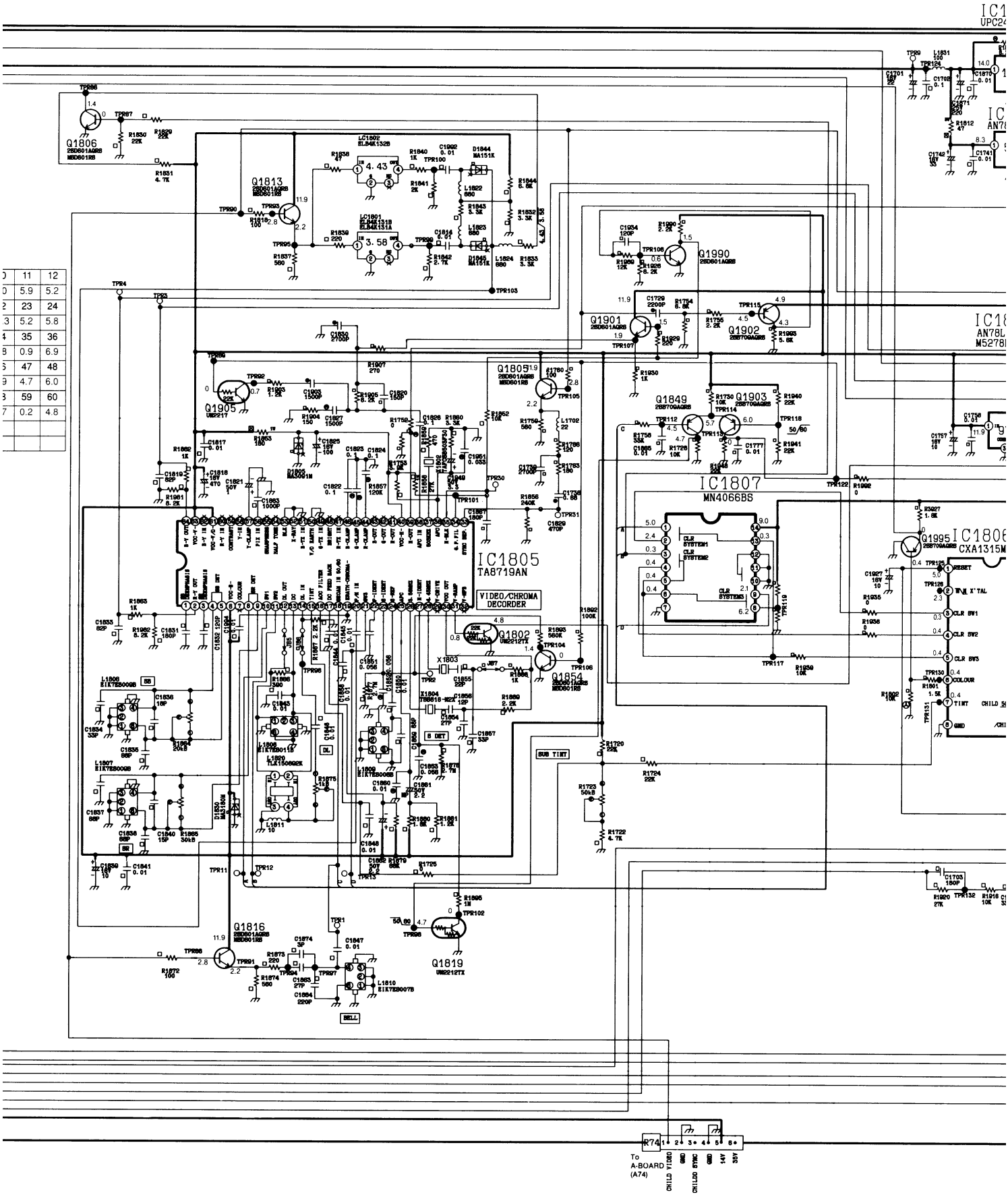
IC1805
TA8719AN
VIDEO/CHROMA DECODER
IC1807
MN4066BS
IC1806
CXA1315M
Q1905
Q1813
Q1806
Q1990
Q1901
Q1902
Q1849
Q1903
Q1995
Q1802
Q1854
Q1816
Q1819
Q1805
R74
To A-BOARD (A74)
CHILD VIDEO
GND
CHILD SYNC
GND
14V
35V
F
G
H
I
J

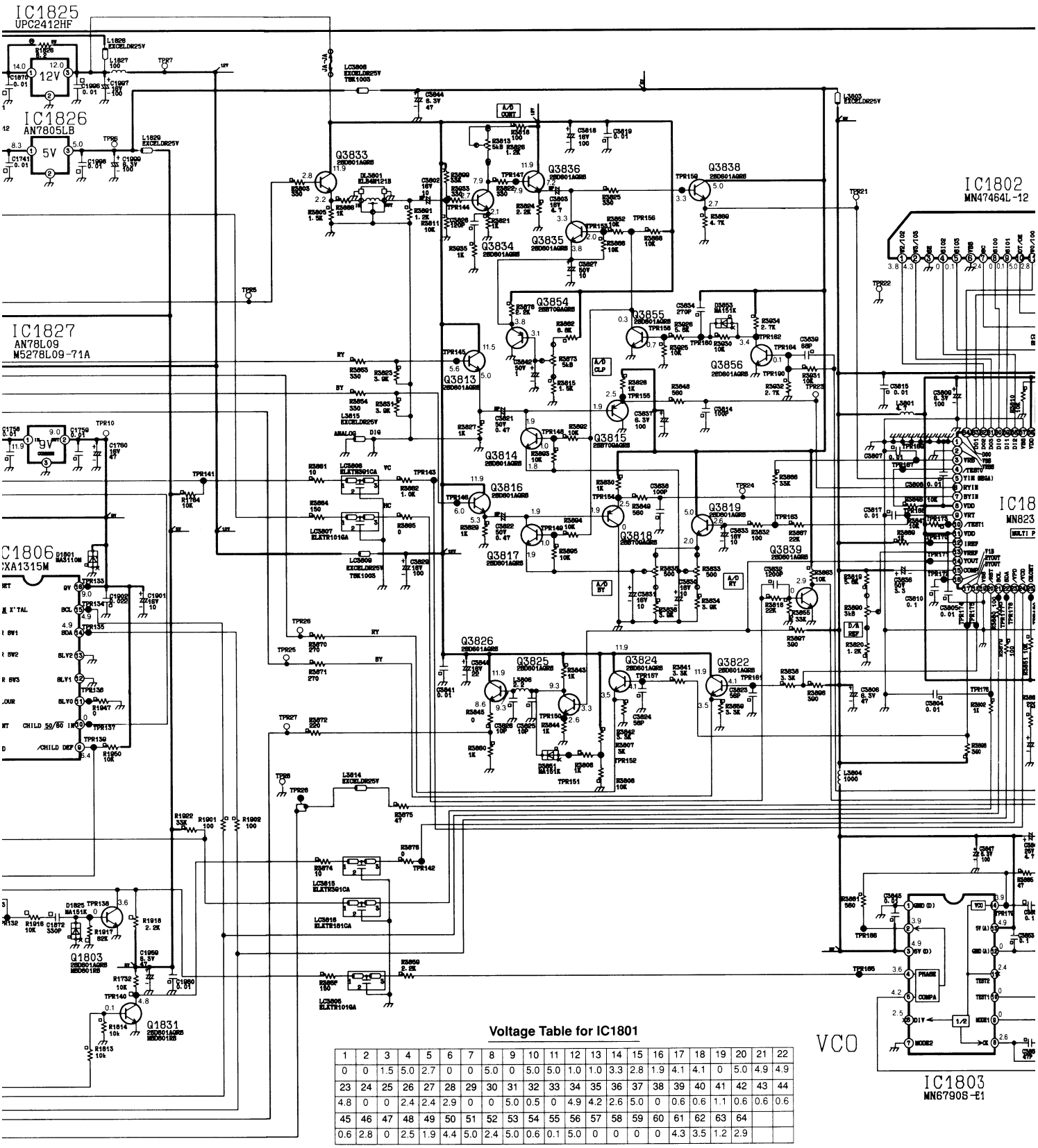

Voltage Table for IC1801

1	2	3	4	5	6	7	8	9	10	11	12	13	14	15	16	17	18	19	20	21	22
0	0	1.5	5.0	2.7	0	0	5.0	0	5.0	5.0	1.0	1.0	3.3	2.8	1.9	4.1	4.1	0	5.0	4.9	4.9
23	24	25	26	27	28	29	30	31	32	33	34	35	36	37	38	39	40	41	42	43	44
4.8	0	0	2.4	2.4	2.9	0	0	5.0	0.5	0	4.9	4.2	2.6	5.0	0	0.6	0.6	1.1	0.6	0.6	0.6
45	46	47	48	49	50	51	52	53	54	55	56	57	58	59	60	61	62	63	64		
0.6	2.8	0	2.5	1.9	4.4	5.0	2.4	5.0	0.6	0.1	5.0	0	0	0	0	4.3	3.5	1.2	2.9		

J K L M N

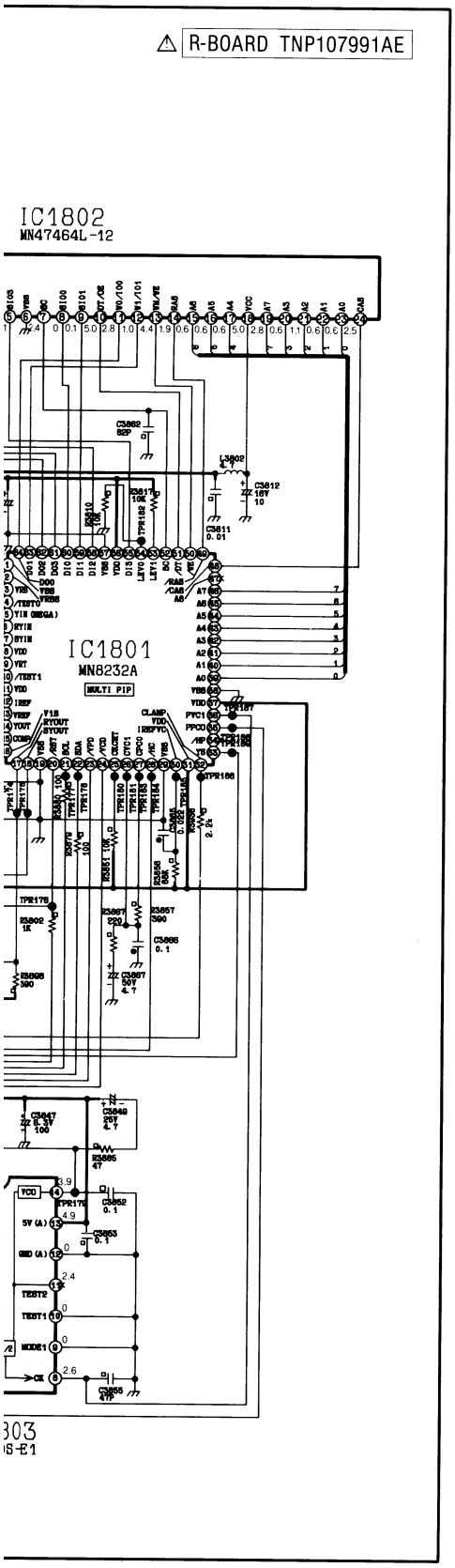
R-BOARD TNP107991AE
IC1802
MN47464L-12
IC1801
MN8232A
MULTI PIP

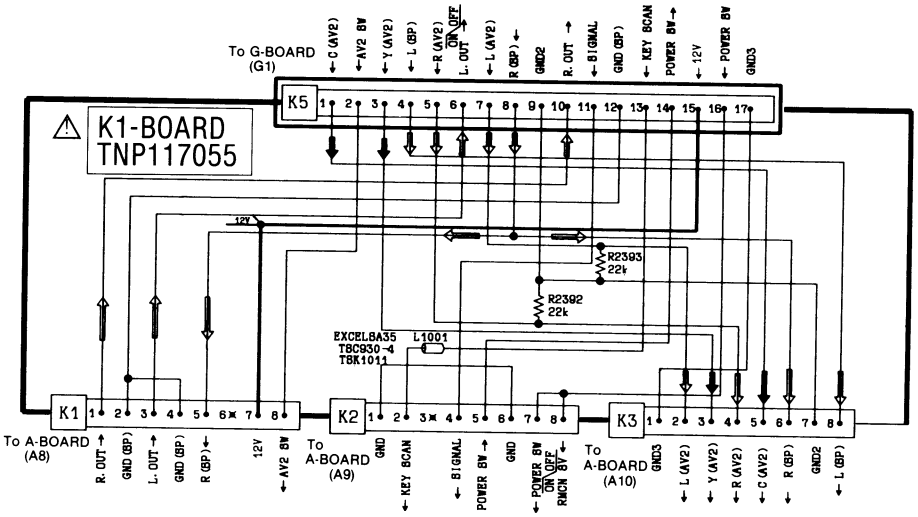
K1-BOARD
TNP117055
To G-BOARD
(G1)
K5
K1
K2
K3
To A-BOARD
(A8)
To A-BOARD
(A9)
To A-BOARD
(A10)
EXCELSA35
TSC930-4
TSK1011
L1001
R2393
22k
R2392
22k
12V

O P Q R S

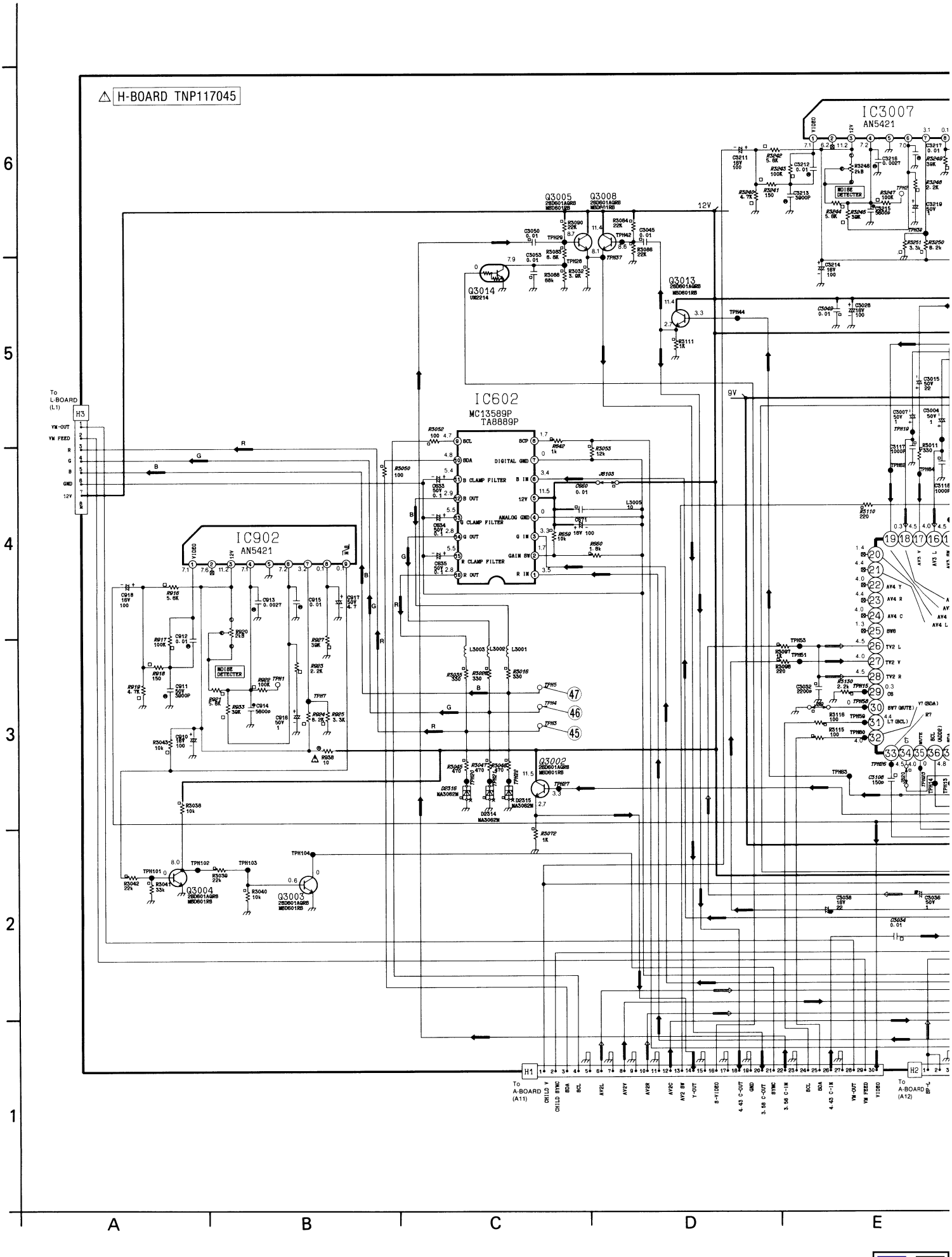
H-BOARD TNP117045
IC3007
AN5421
IC602
MC13589P
TA8889P
IC902
AN5421
Q3005
Q3008
Q3013
Q3014
Q3002
Q3004
Q3003
To L-BOARD (L1)
H3
H1
To A-BOARD (A11)
H2
To A-BOARD (A12)
NOISE DETECTOR
DIGITAL GND
ANALOG GND
B CLAMP FILTER
G CLAMP FILTER
R CLAMP FILTER
GAIN SW
12V
9V

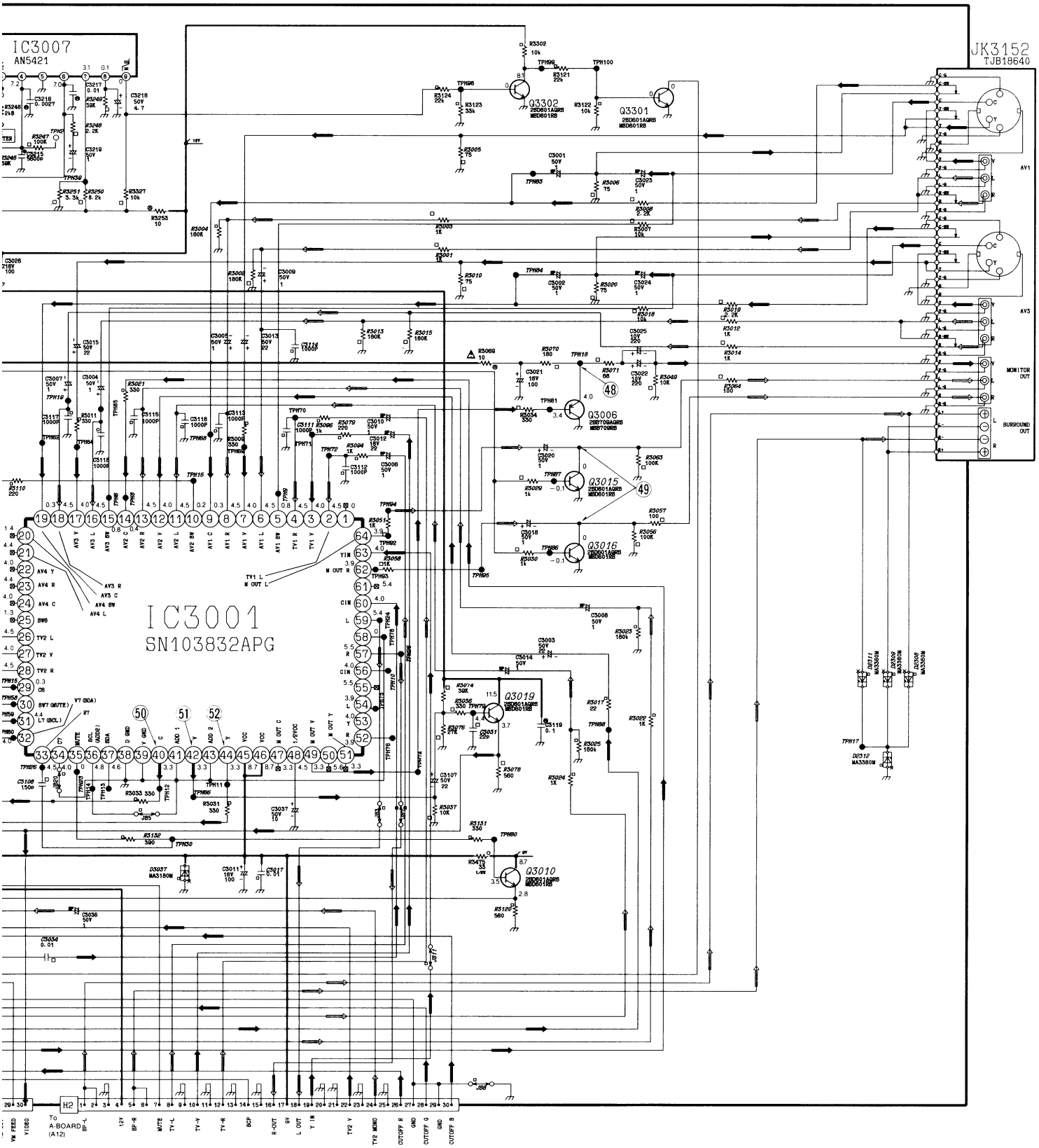
IC3007
AN5421
IC3001
SN103832APG
JK3152
TJB18640
Q3302
Q3301
Q3006
Q3015
Q3016
Q3019
Q3010
AV1
AV3
MONITOR OUT
SURROUND OUT
To A-BOARD (A12)

E F G H I

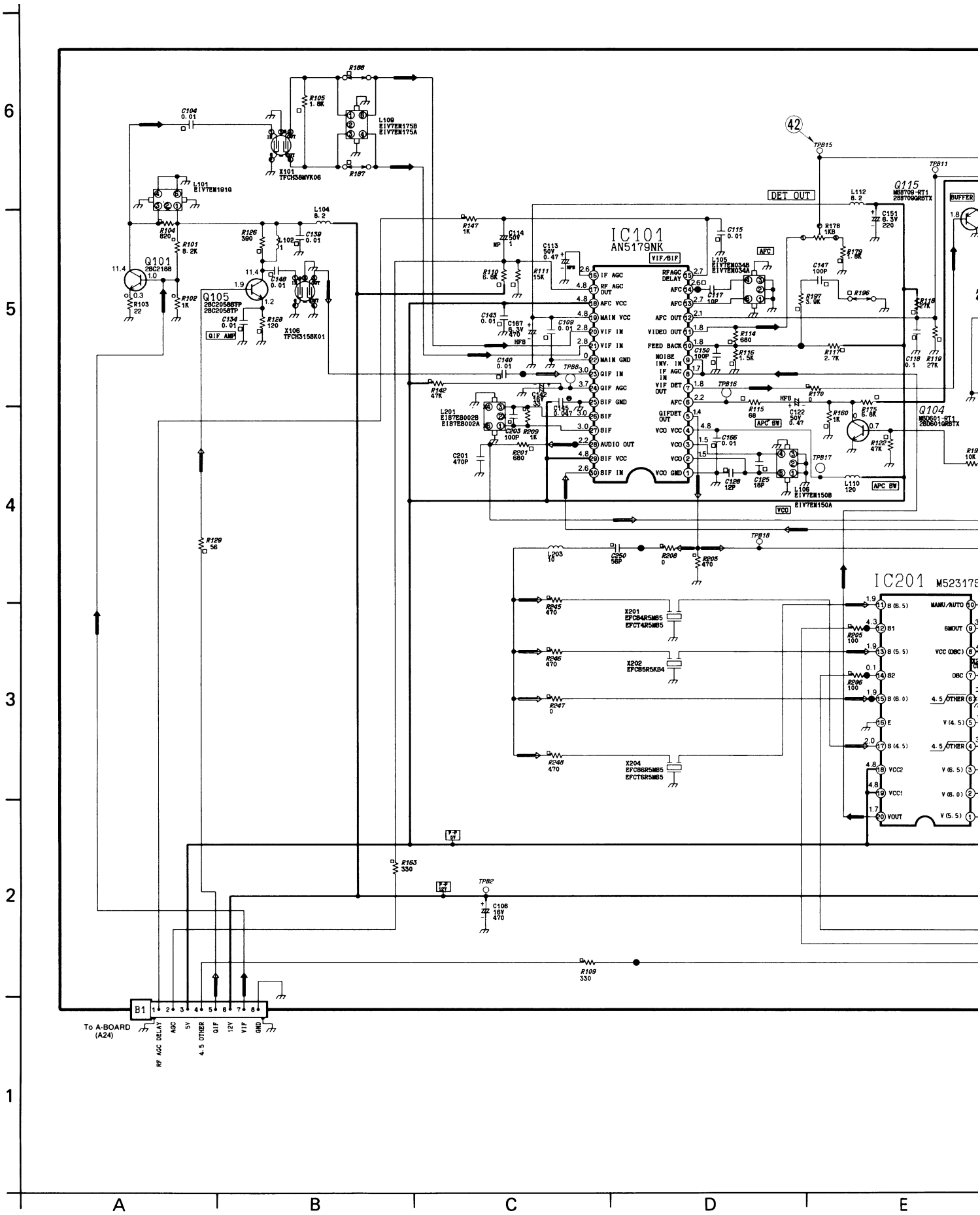

IC101
AN5179NK
IC201
Q101
2SC2188
Q105
2SC2058BTP
2SC2058TP
Q115
M88709-RT1
2SB709QRBTX
Q104
M8D601-RT1
2SD601QRBTX
DET OUT
BUFFER
VIF/BIF
AFC
APC BW
VCO
QIF AMP
X101
TFCH38MVK06
X106
TFCH3158K01
L109
EIV7EN175B
EIV7EN175A
L101
EIV7EN191Q
L105
EIV7EN034B
EIV7EN034A
L106
EIV7EN150B
EIV7EN150A
L201
EIB7EB002B
EIB7EB002A
X201
EFCB4R5MB5
EFCT4R5MB5
X202
EFCB5R5KB4
X204
EFCB6R5MB5
EFCT6R5MB5
B1
To A-BOARD
(A24)
RF AGC DELAY
AGC
5V
4.5 OTHER
QIF
12V
VIF
GND
A
B
C
D
E
1
2
3
4
5
6

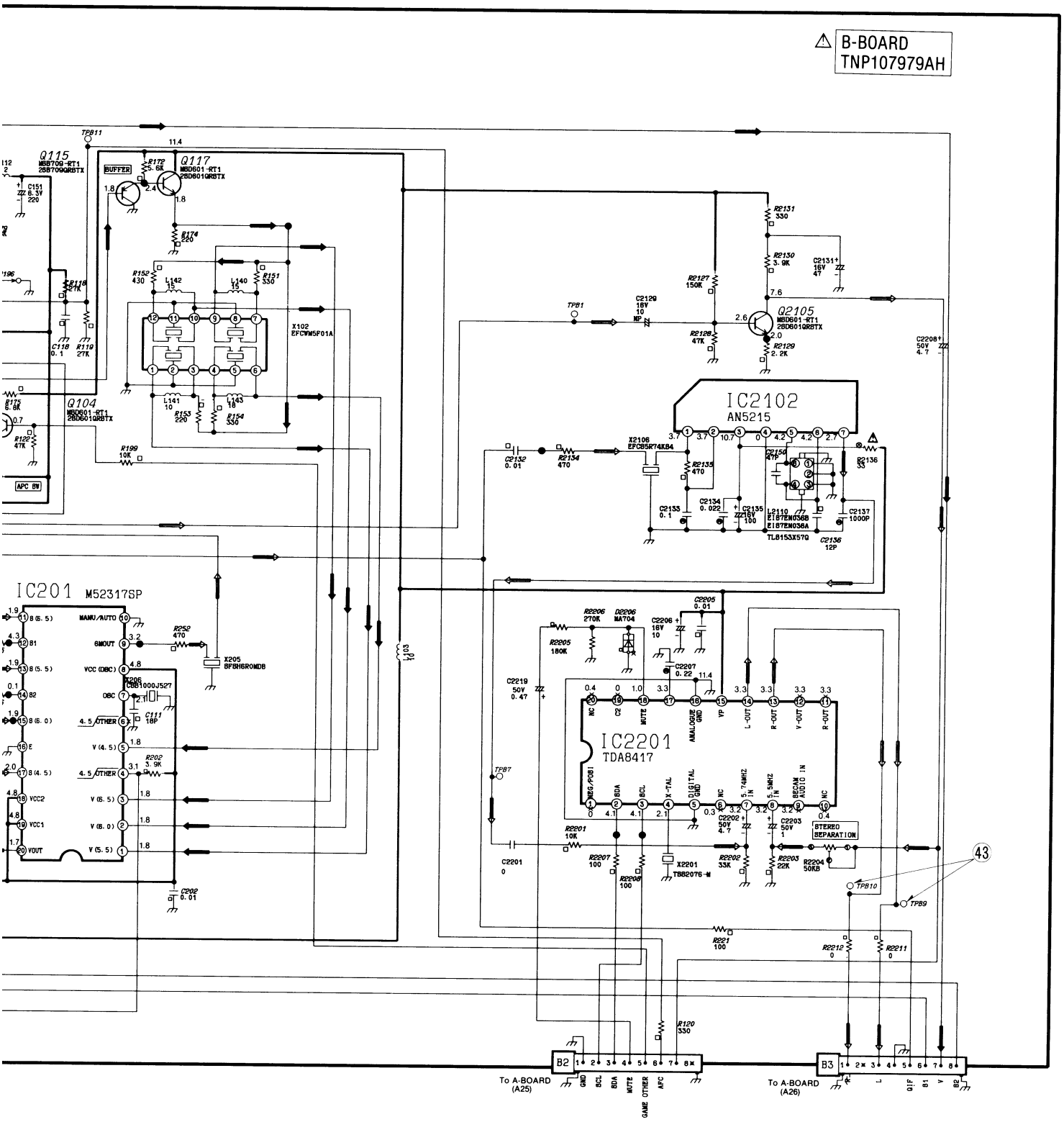
B-BOARD
TNP107979AH
IC2102
AN5215
IC201
M52317SP
IC2201
TDA8417
Q115
Q117
Q104
Q2105
BUFFER
APC BW
STEREO SEPARATION
To A-BOARD (A25)
To A-BOARD (A26)
B2
B3
43

E F G H I

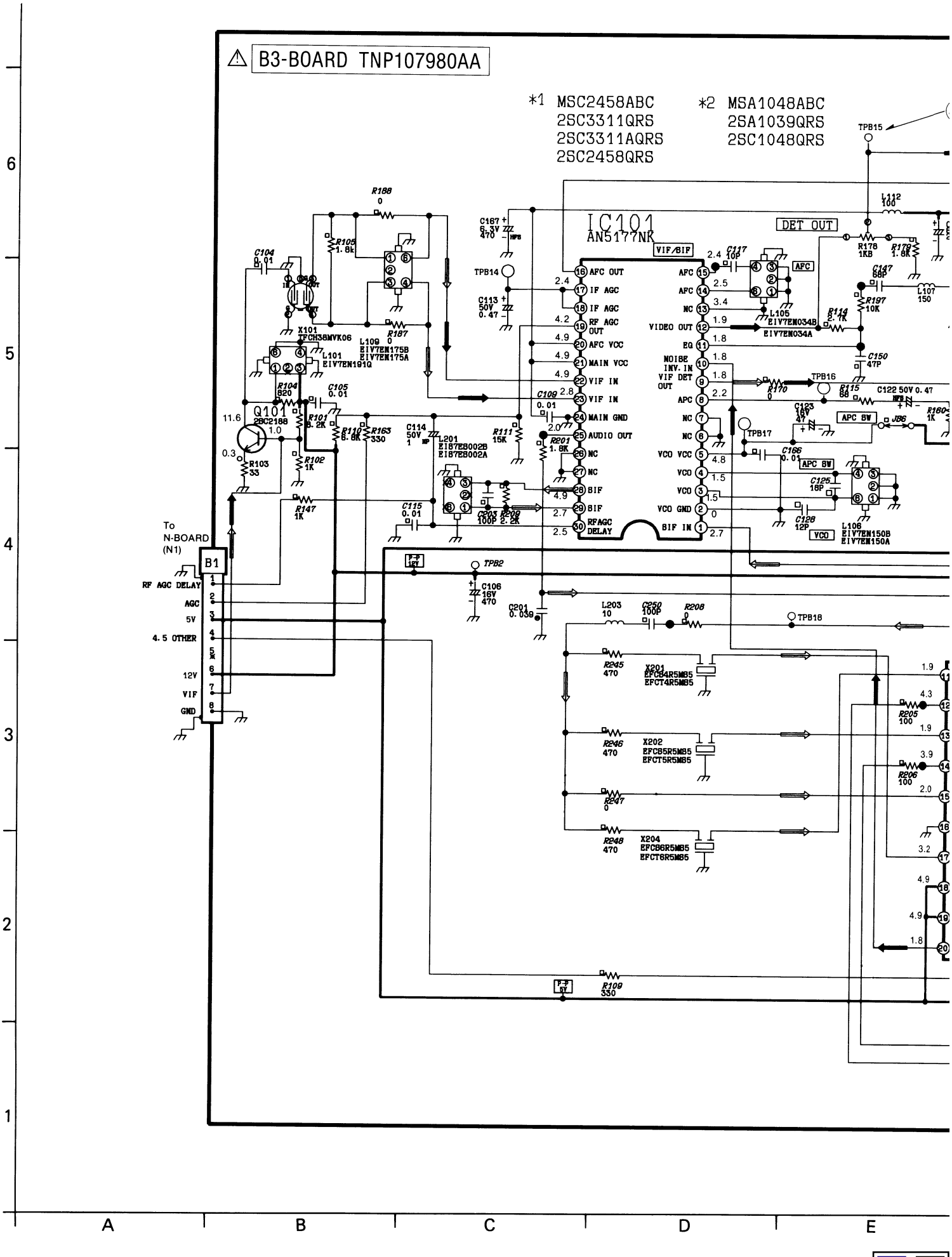
B3-BOARD TNP107980AA
*1 MSC2458ABC
2SC3311QRS
2SC3311AQRS
2SC2458QRS
*2 MSA1048ABC
2SA1039QRS
2SC1048QRS
IC101
AN5177NK
VIF/BIF
DET OUT
AFC
APC SW
VCO
Q101
2SC2188
X101
TFCH38MVK06
L101
EIV7EN191Q
L109
EIV7EN175B
EIV7EN175A
L201
EIB7EB002B
EIB7EB002A
L105
EIV7EN034B
EIV7EN034A
L106
EIV7EN150B
EIV7EN150A
X201
EFCB4R5MB5
EFCT4R5MB5
X202
EFCB5R5MB5
EFCT5R5MB5
X204
EFCB6R5MB5
EFCT6R5MB5
To
N-BOARD
(N1)
B1
RF AGC DELAY
AGC
5V
4.5 OTHER
12V
VIF
GND
AFC OUT
IF AGC
IF AGC
RF AGC OUT
AFC VCC
MAIN VCC
VIF IN
VIF IN
MAIN GND
AUDIO OUT
NC
NC
BIF
BIF
RFAGC DELAY
AFC
AFC
NC
VIDEO OUT
EQ
NOISE INV. IN
VIF DET OUT
APC
NC
NC
VCO VCC
VCO
VCO
VCO GND
BIF IN
TPB14
TPB15
TPB16
TPB17
TPB18
TPB2

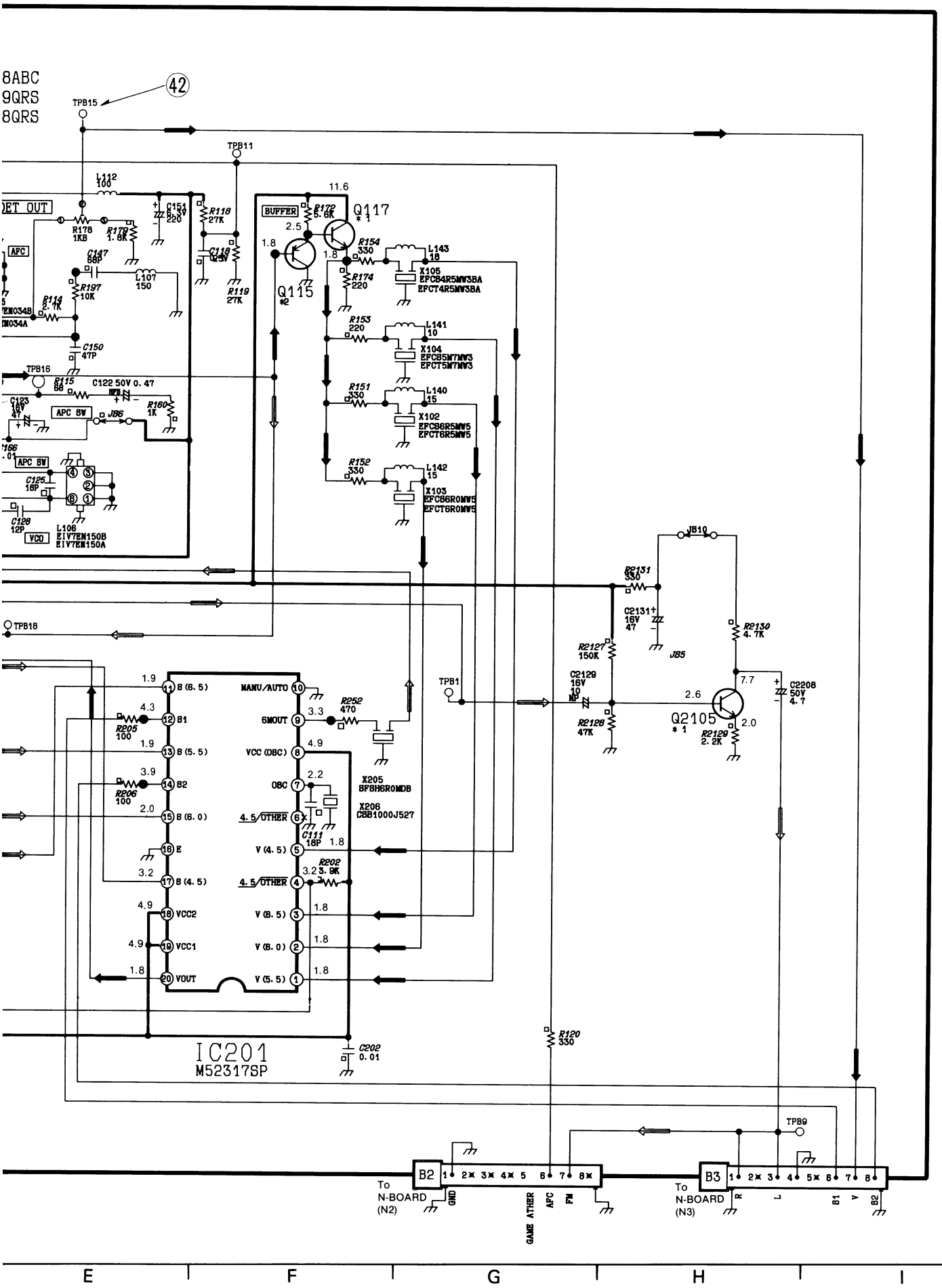

8ABC
9QRS
8QRS
42
TPB15
TPB11
L112
100
DET OUT
R178
1KB
R179
1.8K
C151
220
R118
27K
C118
R119
27K
C147
68P
L107
150
R197
10K
R114
2.7K
C150
47P
TPB16
R115
68
C122 50V 0.47
C123
16V
47
APC SW
J86
R160
1K
C125
18P
C128
12P
VCO
L106
EIV7EN150B
EIV7EN150A
BUFFER
R172
5.6K
Q117
*1
Q115
*2
R154
330
L143
18
X105
EFCB4R5MW3BA
EFCT4R5MW3BA
R174
220
R153
220
L141
10
X104
EFCB5M7MW3
EFCT5M7MW3
R151
330
L140
15
X102
EFCB6R5MW5
EFCT6R5MW5
R152
330
L142
15
X103
EFCB6R0MW5
EFCT6R0MW5
JB10
R2131
330
C2131
16V
47
R2130
4.7K
R2127
150K
J85
C2129
16V
10
NP
R2128
47K
Q2105
*1
R2129
2.2K
C2208
50V
4.7
TPB18
TPB1
R252
470
X205
SFSH6R0MDB
X206
CSB1000J527
C111
18P
R202
3.9K
R205
100
R206
100
S (6.5)
S1
S (5.5)
S2
S (6.0)
E
S (4.5)
VCC2
VCC1
VOUT
MANU/AUTO
SMOUT
VCC (OSC)
OSC
4.5/OTHER
V (4.5)
V (6.5)
V (6.0)
V (5.5)
IC201
M52317SP
C202
0.01
R120
330
TPB9
B2
To
N-BOARD
(N2)
GND
GAME ATHER
AFC
FM
B3
To
N-BOARD
(N3)
R
L
S1
V
S2
E
F
G
H
I

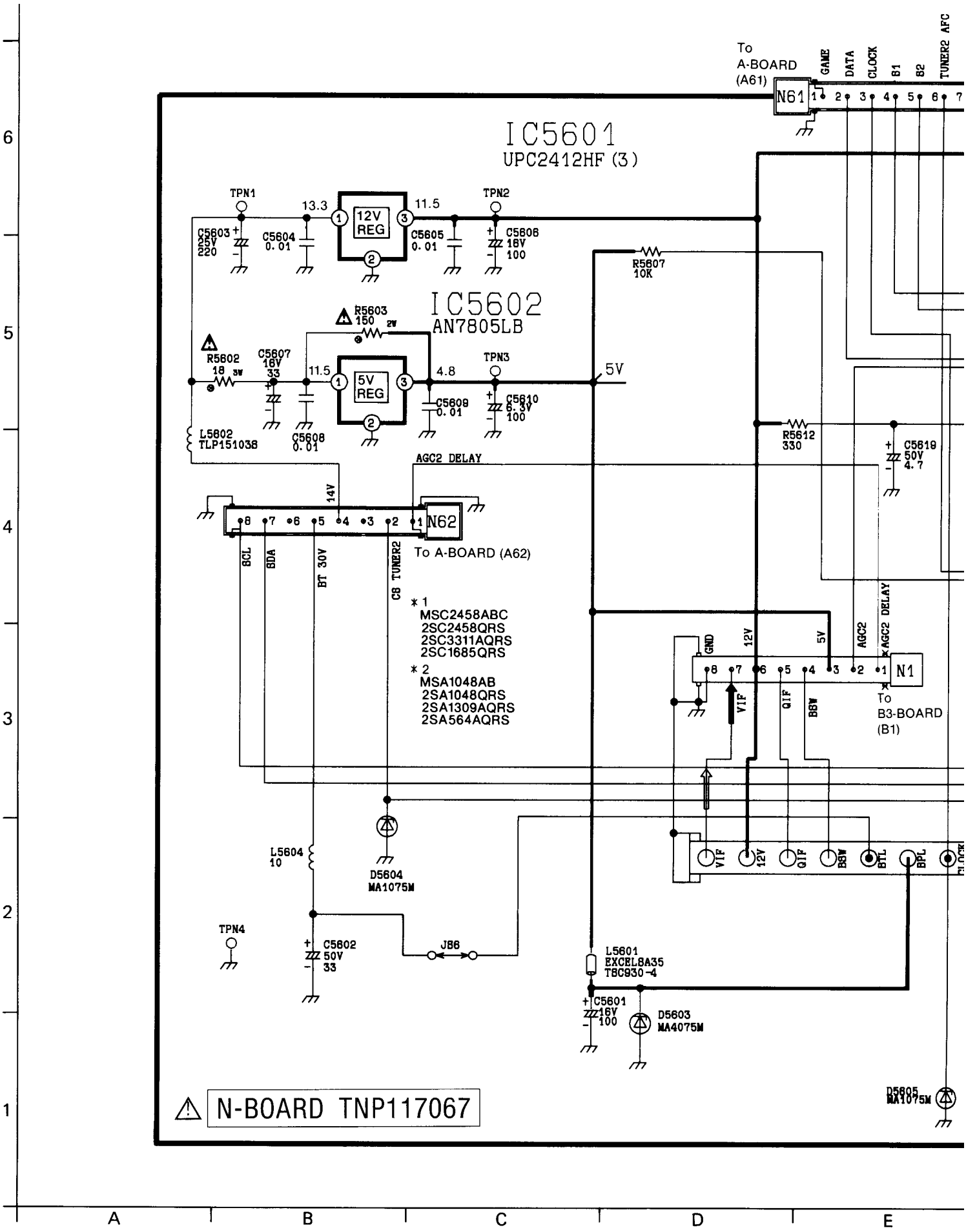
To A-BOARD (A61)
N61
GAME
DATA
CLOCK
B1
B2
TUNER2 AFC
IC5601
UPC2412HF (3)
TPN1
13.3
12V REG
11.5
TPN2
C5603 25V 220
C5604 0.01
C5605 0.01
C5606 16V 100
R5607 10K
IC5602
AN7805LB
R5603 150 2W
R5602 18 3W
C5607 16V 33
11.5
5V REG
4.8
TPN3
5V
C5609 0.01
C5610 6.3V 100
L5602 TLP151038
C5608 0.01
R5612 330
C5619 50V 4.7
AGC2 DELAY
14V
N62
To A-BOARD (A62)
BCL
BDA
BT 30V
CB TUNER2
*1
MSC2458ABC
2SC2458QRS
2SC3311AQRS
2SC1685QRS
*2
MSA1048AB
2SA1048QRS
2SA1309AQRS
2SA564AQRS
GND
12V
5V
AGC2
AGC2 DELAY
N1
To B3-BOARD (B1)
VIF
QIF
BSW
BTL
BPL
L5604 10
D5604 MA1075M
TPN4
C5602 50V 33
JB6
L5601 EXCELSA35 TBC930-4
C5601 16V 100
D5603 MA4075M
D5605 MA1075M
N-BOARD TNP117067

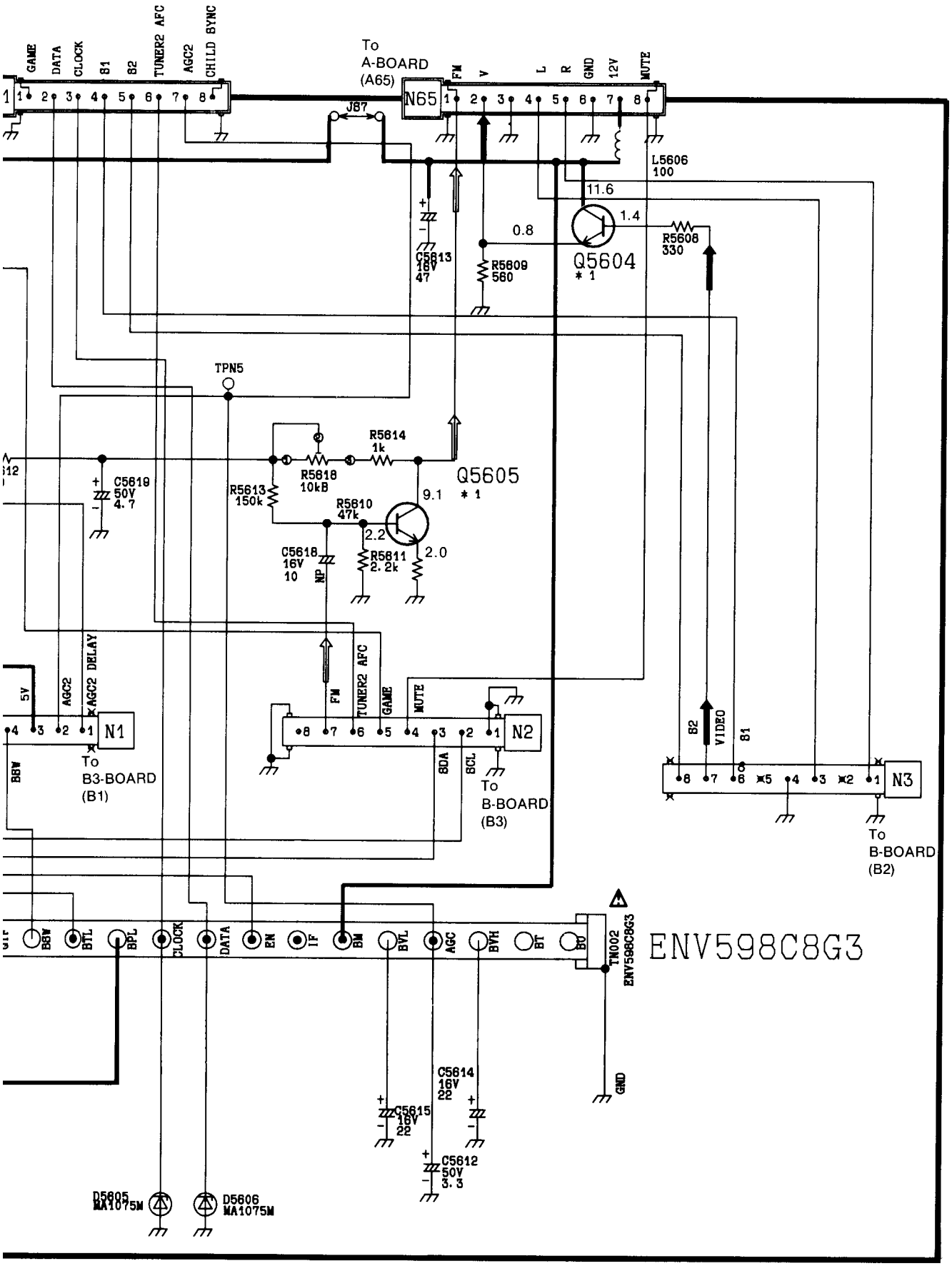
GAME
DATA
CLOCK
B1
B2
TUNER2 AFC
AGC2
CHILD SYNC
To
A-BOARD
(A65)
N65
FM
V
L
R
GND
12V
MUTE
J87
L5606
100
11.6
1.4
0.8
R5608
330
Q5604
* 1
C5613
16V
47
R5609
560
TPN5
R5614
1k
R5618
10kB
Q5605
* 1
C5619
50V
4.7
R5613
150k
R5610
47k
9.1
2.2
2.0
C5618
16V
10
NP
R5611
2.2k
AGC2
AGC2 DELAY
5V
N1
To
B3-BOARD
(B1)
FM
TUNER2 AFC
GAME
MUTE
N2
BDA
BCL
To
B-BOARD
(B3)
B2
VIDEO
B1
N3
To
B-BOARD
(B2)
BSW
BTL
BPL
CLOCK
DATA
EN
IF
BM
BVL
AGC
BVH
BT
BO
TN002
ENV598C8G3
GND
C5614
16V
22
C5615
16V
22
C5612
50V
3.3
D5605
MA1075M
D5606
MA1075M

E F G H I

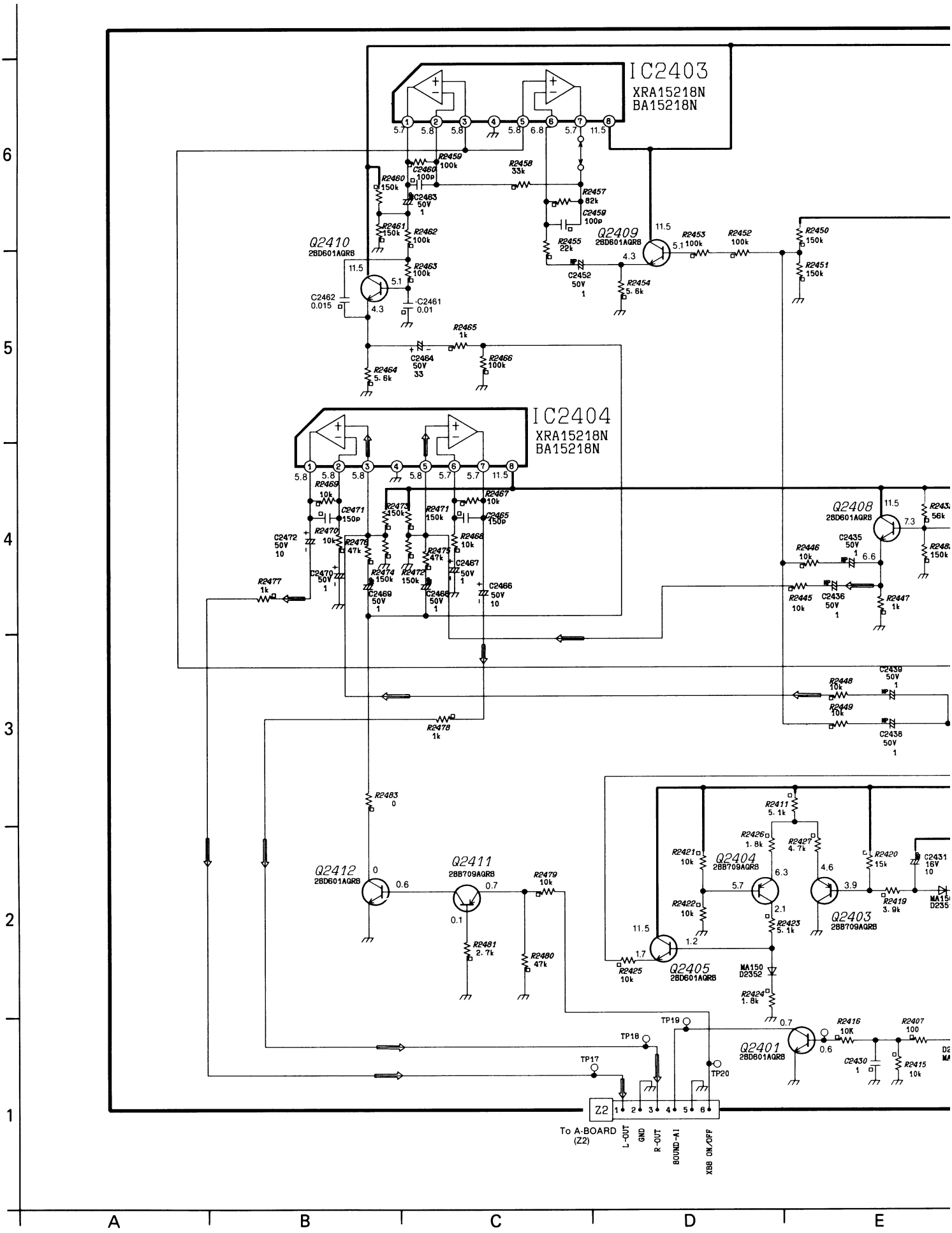
IC2403
XRA15218N
BA15218N
IC2404
XRA15218N
BA15218N
Q2410
2SD601AQRB
Q2409
2SD601AQRB
Q2408
2SD601AQRB
Q2412
2SD601AQRB
Q2411
2SB709AQRB
Q2404
2SB709AQRB
Q2403
2SB709AQRB
Q2405
2SD601AQRB
Q2401
2SD601AQRB
R2459 100k
C2460 100p
R2460 150k
C2463 50V 1
R2458 33k
R2457 82k
C2459 100p
R2455 22k
C2452 50V 1
R2454 5.6k
R2453 100k
R2452 100k
R2450 150k
R2451 150k
R2461 150k
R2462 100k
R2463 100k
C2462 0.015
C2461 0.01
R2465 1k
C2464 50V 33
R2466 100k
R2464 5.6k
R2469 10k
C2471 150p
R2467 10k
R2473 150k
R2471 150k
C2465 150p
C2472 50V 10
R2470 10k
R2476 47k
R2468 10k
R2475 47k
C2467 50V 1
C2470 50V 1
R2474 150k
R2472 150k
C2469 50V 1
C2468 50V 1
C2466 50V 10
R2477 1k
R2446 10k
C2435 50V 1
R2445 10k
C2436 50V 1
R2447 1k
R2448 10k
C2439 50V 1
R2449 10k
C2438 50V 1
R2478 1k
R2483 0
R2411 5.1k
R2426 1.8k
R2427 4.7k
R2421 10k
R2420 15k
C2431 16V 10
R2422 10k
R2419 3.9k
R2423 5.1k
R2425 10k
MA150 D2352
R2424 1.8k
R2479 10k
R2481 2.7k
R2480 47k
R2416 10K
R2407 100
C2430 1
R2415 10k
TP17
TP18
TP19
TP20
Z2
To A-BOARD (Z2)
L-OUT
GND
R-OUT
SOUND-A1
XBB ON/OFF

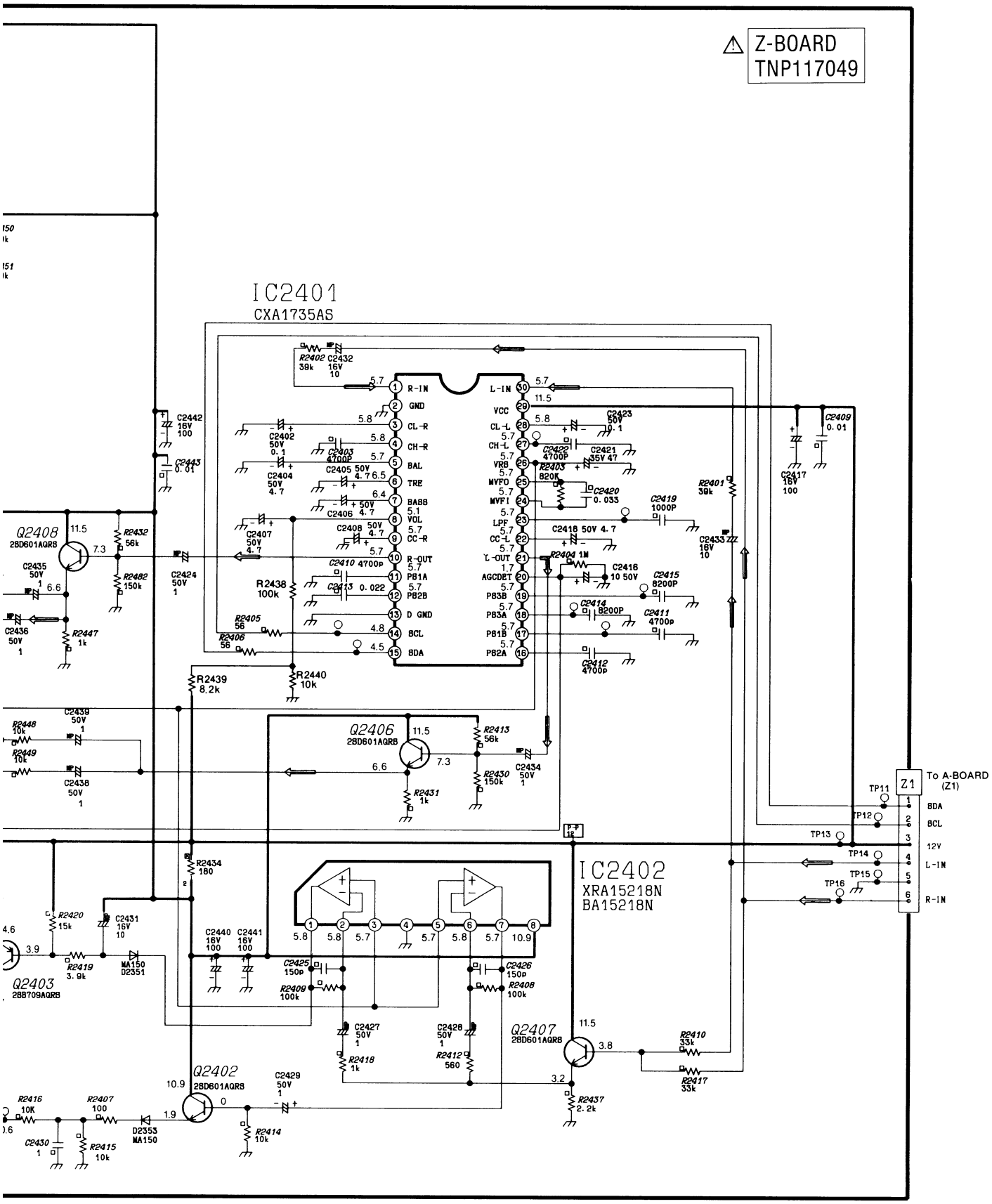
Z-BOARD
TNP117049
IC2401
CXA1735AS
R-IN
GND
CL-R
CH-R
BAL
TRE
BASS
VOL
CC-R
R-OUT
PB1A
PB2B
D GND
BCL
BDA
L-IN
VCC
CL-L
CH-L
VRB
MVFO
MVFI
LPF
CC-L
L-OUT
AGCDET
PB3B
PB3A
PB1B
PB2A
Q2408
2SD601AQRB
Q2406
2SD601AQRB
Q2403
2SB709AQRB
Q2402
2SD601AQRB
Q2407
2SD601AQRB
IC2402
XRA15218N
BA15218N
To A-BOARD
(Z1)
Z1
BDA
BCL
12V
L-IN
R-IN
TP11
TP12
TP13
TP14
TP15
TP16
E
F
G
H
I

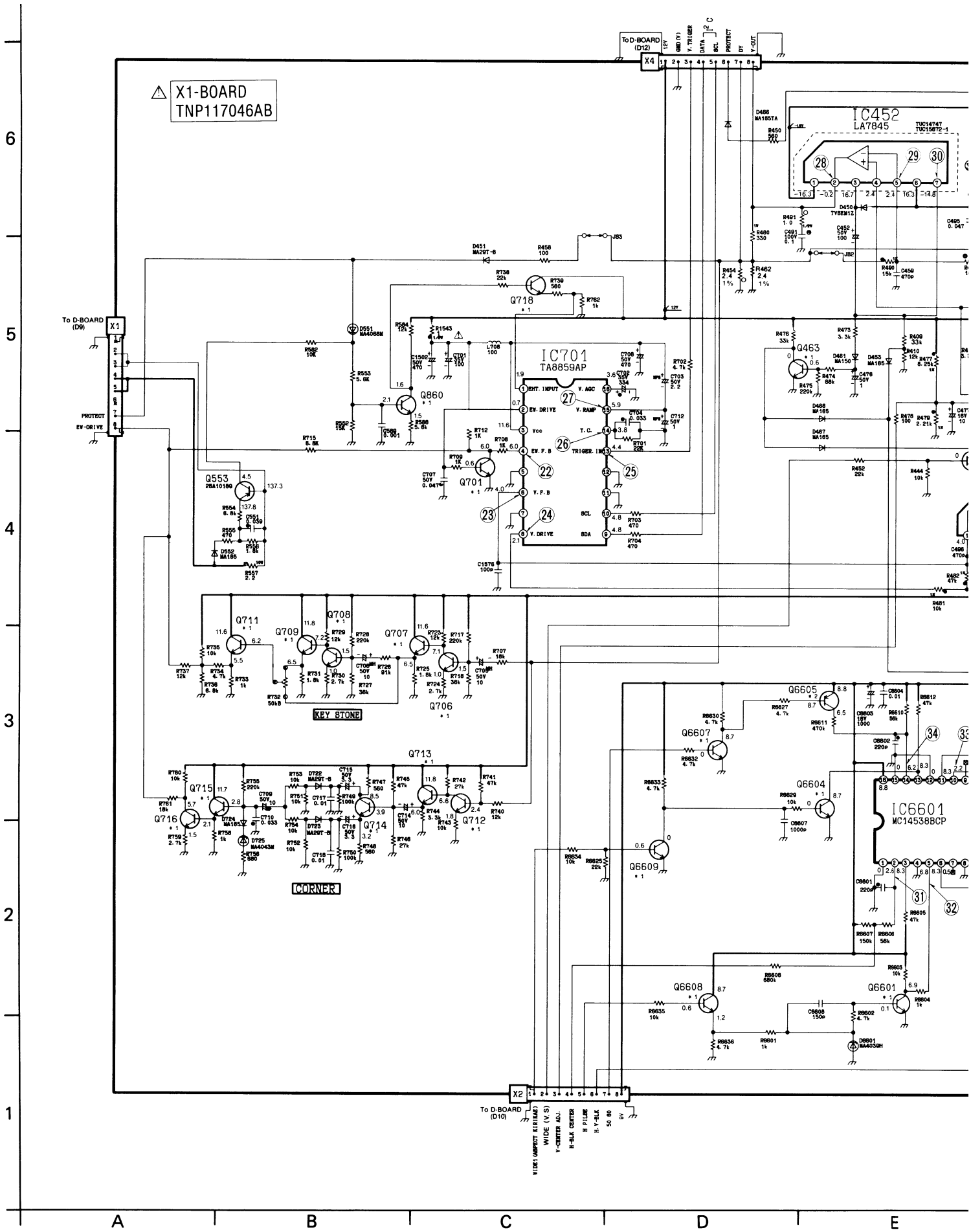
X1-BOARD
TNP117046AB
To D-BOARD (D12)
X4
12V
GND (V)
V. TRIGER
DATA
SCL
PROTECT
DY
V-OUT
IC452
LA7845
TUC14747
TUC15872-1
To D-BOARD (D9)
X1
PROTECT
EV-DRIVE
IC701
TA8859AP
EHT. INPUT
V. AGC
EV. DRIVE
V. RAMP
Vcc
T. C.
EV. F. B
TRIGER. IN
V. F. B
SCL
V. DRIVE
SDA
Q718
Q860
Q553
Q701
Q463
Q711
Q709
Q708
Q707
Q706
KEY STONE
Q713
Q715
Q716
Q714
Q712
CORNER
Q6605
Q6607
Q6604
Q6609
IC6601
MC14538BCP
Q6608
Q6601
X2
To D-BOARD (D10)
WIDE1 (ASPECT KIRIKAE)
WIDE (V.S)
V-CENTER ADJ.
H-BLK CENTER
H PILSE
H.V-BLK
50 60
GV
A
B
C
D
E
1
2
3
4
5
6

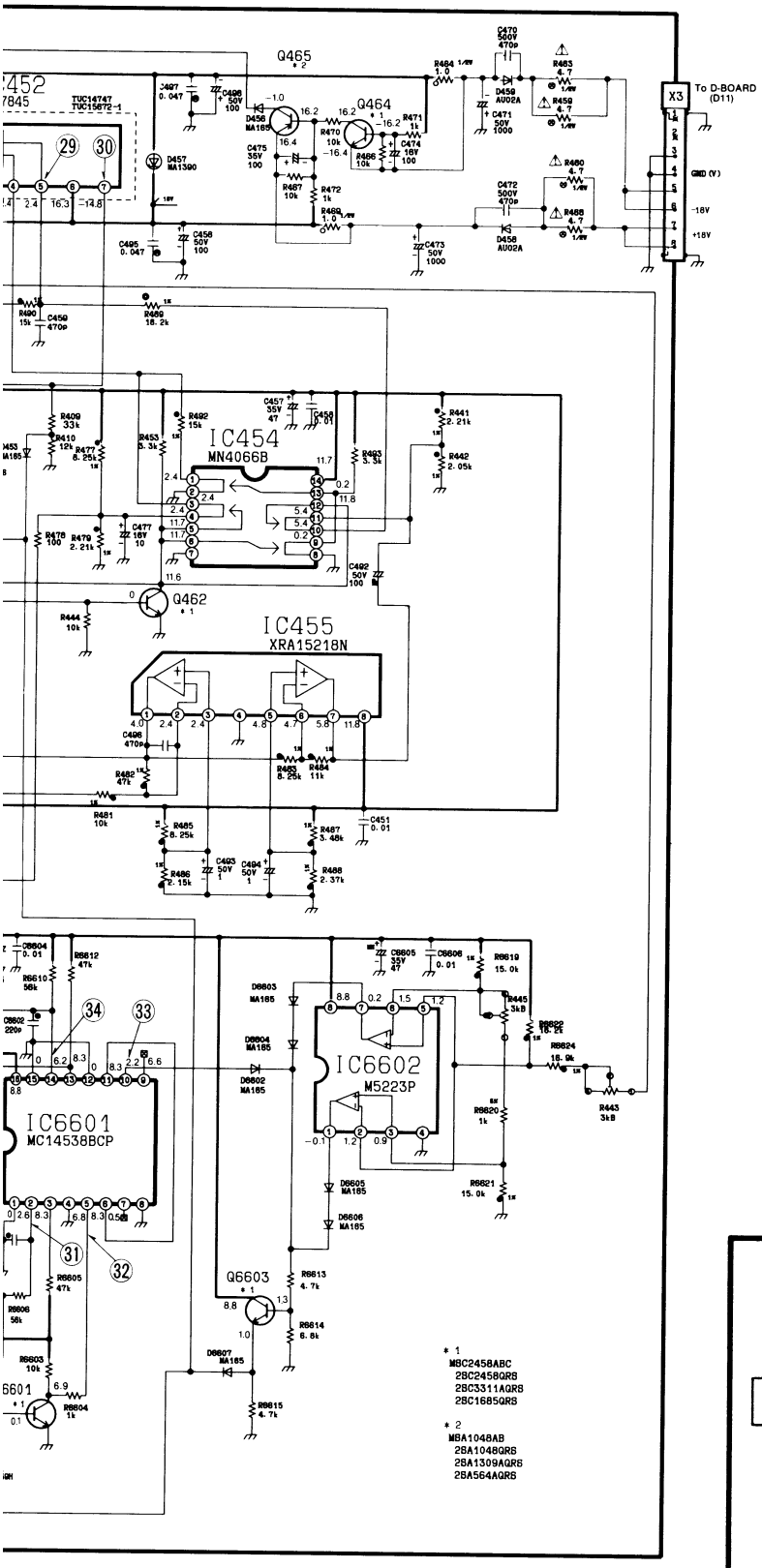

IC701 (PINCUSION CONTROL : TA8859AP)

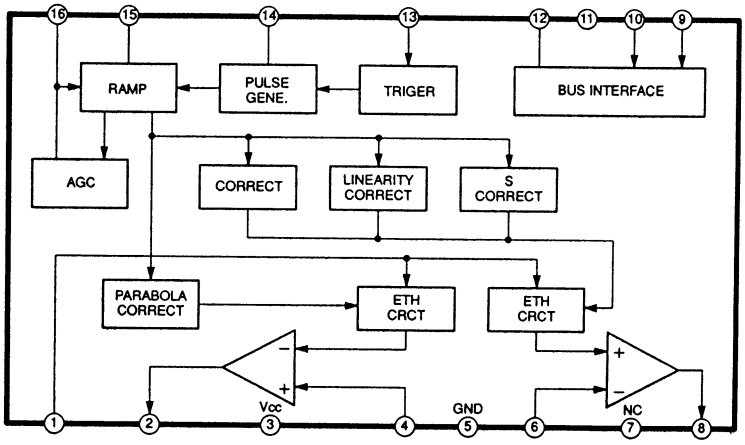

E F G H I

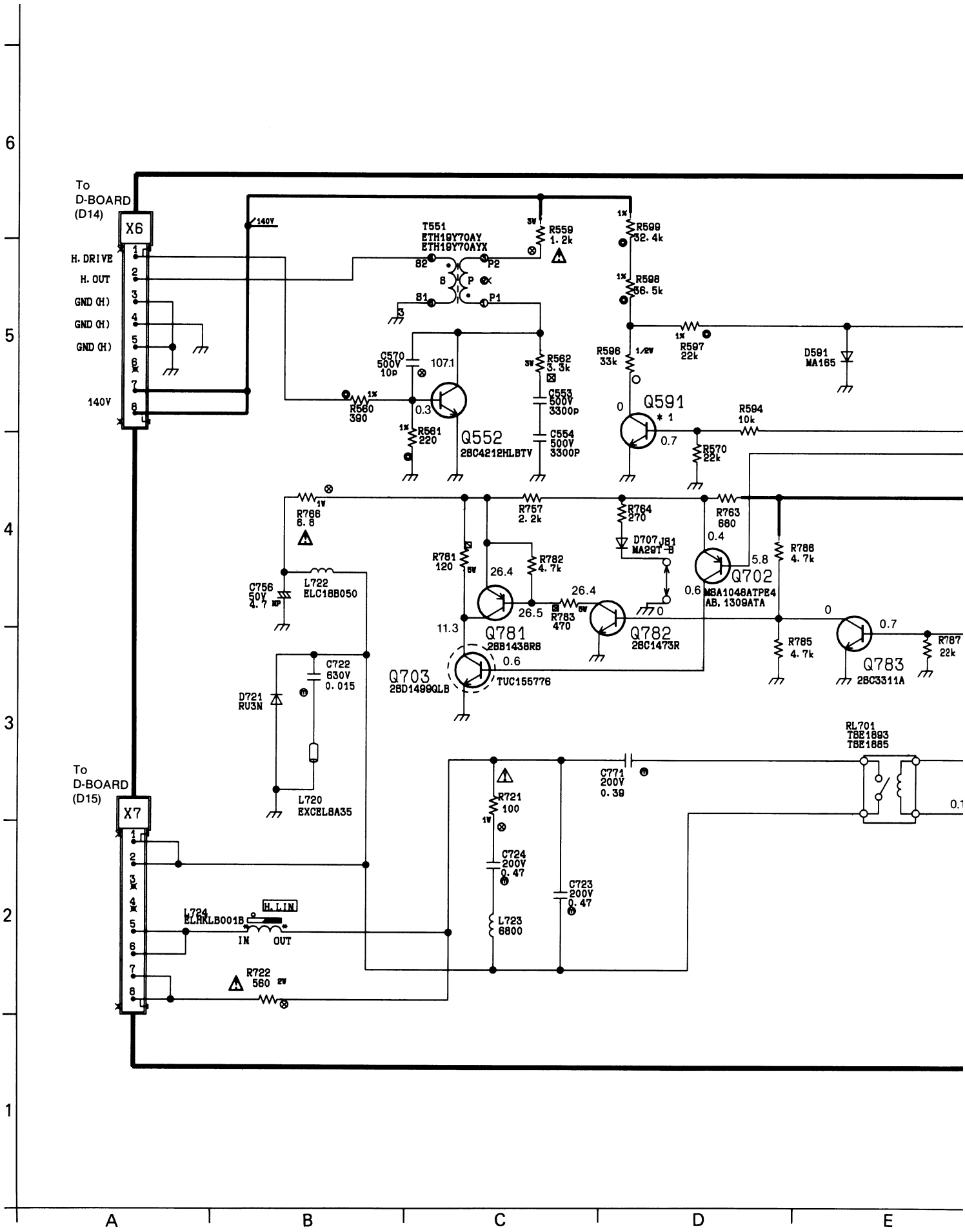

To D-BOARD (D14)
X6
H. DRIVE
H. OUT
GND (H)
GND (H)
GND (H)
140V
140V
T551
ETH19Y70AY
ETH19Y70AYX
R559 1.2k
R599 32.4k
R598 36.5k
R597 22k
D591 MA165
C570 500V 10p
107.1
R562 3.3k
C553 500V 3300p
C554 500V 3300P
R560 390
R561 220
Q552
2SC4212HLBTV
R596 33k
Q591
R594 10k
R570 22k
R766 6.8
R757 2.2k
R764 270
R763 680
D707 MA29T-B
R781 120
R782 4.7k
Q702
MSA1048ATPE4
AB, 1309ATA
R786 4.7k
C756 50V 4.7
L722 ELC18B050
Q781
2SB1438RS
R783 470
Q782
2SC1473R
R785 4.7k
Q783
2SC3311A
R787 22k
Q703
2SD1499QLB
TUC155776
C722 630V 0.015
D721 RU3N
L720 EXCEL8A35
RL701
TSE1893
TSE1885
To D-BOARD (D15)
X7
C771 200V 0.39
R721 100
C724 200V 0.47
C723 200V 0.47
L723 6800
L724 ELHKLB001B
H. LIN
IN
OUT
R722 560
A
B
C
D
E

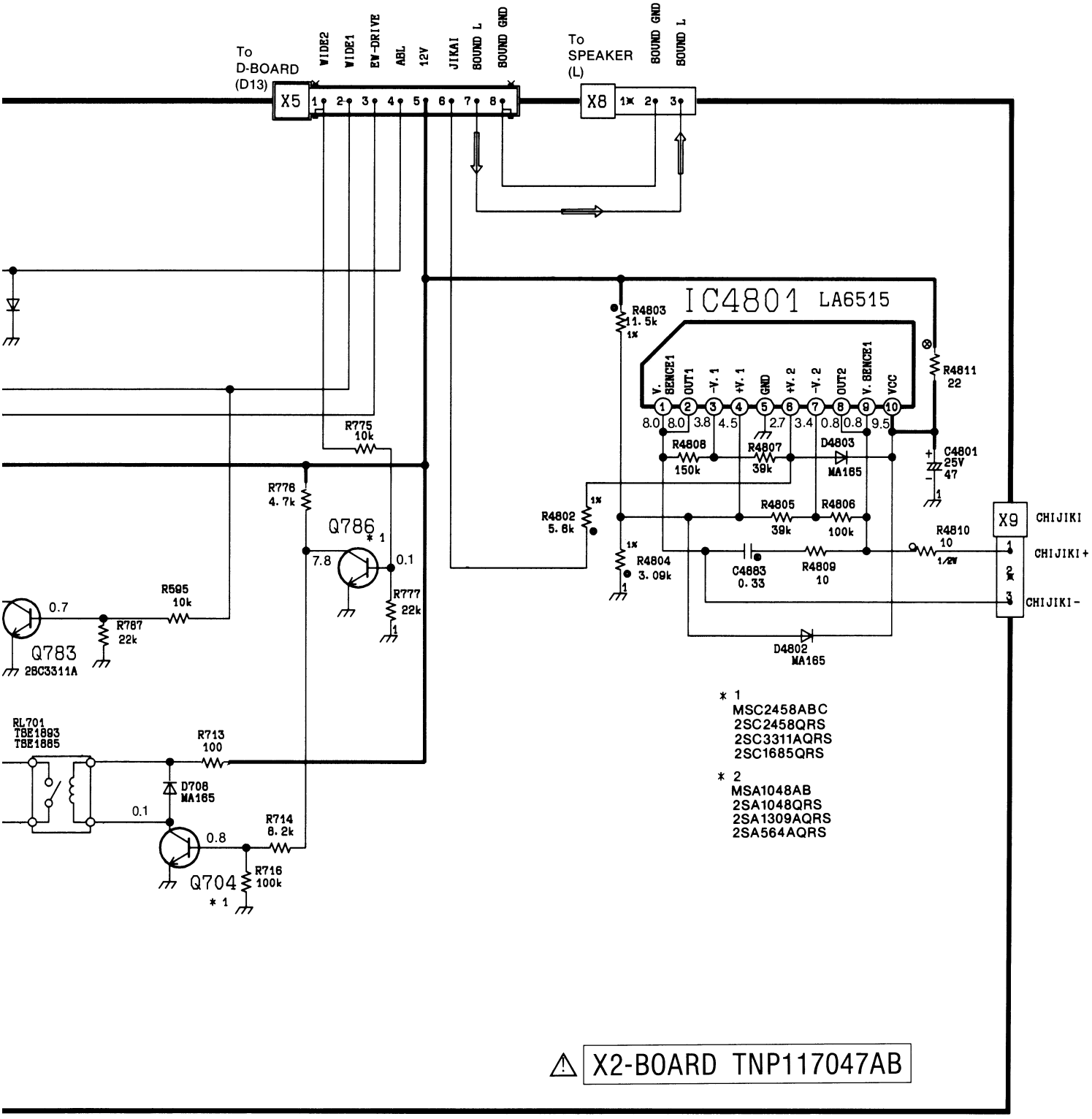
To
D-BOARD
(D13)
X5
WIDE2
WIDE1
EW-DRIVE
ABL
12V
JIKAI
BOUND L
BOUND GND
To
SPEAKER
(L)
X8
BOUND GND
BOUND L
IC4801 LA6515
V. SENCE1
OUT1
-V.1
+V.1
GND
+V.2
-V.2
OUT2
V. SENCE1
VCC
R4803
11.5k
1%
R4811
22
R775
10k
R776
4.7k
Q786
*1
7.8
0.1
R777
22k
R4808
150k
R4807
39k
D4803
MA165
C4801
25V
47
R4802
5.6k
R4805
39k
R4806
100k
R4810
10
1/2W
X9
CHIJIKI
CHIJIKI+
CHIJIKI-
R4804
3.09k
C4883
0.33
R4809
10
D4802
MA165
0.7
R595
10k
R787
22k
Q783
2SC3311A
RL701
TSE1893
TSE1885
R713
100
D708
MA165
0.1
0.8
R714
8.2k
R716
100k
Q704
*1
*1
MSC2458ABC
2SC2458QRS
2SC3311AQRS
2SC1685QRS
*2
MSA1048AB
2SA1048QRS
2SA1309AQRS
2SA564AQRS
X2-BOARD TNP117047AB

E F G H I

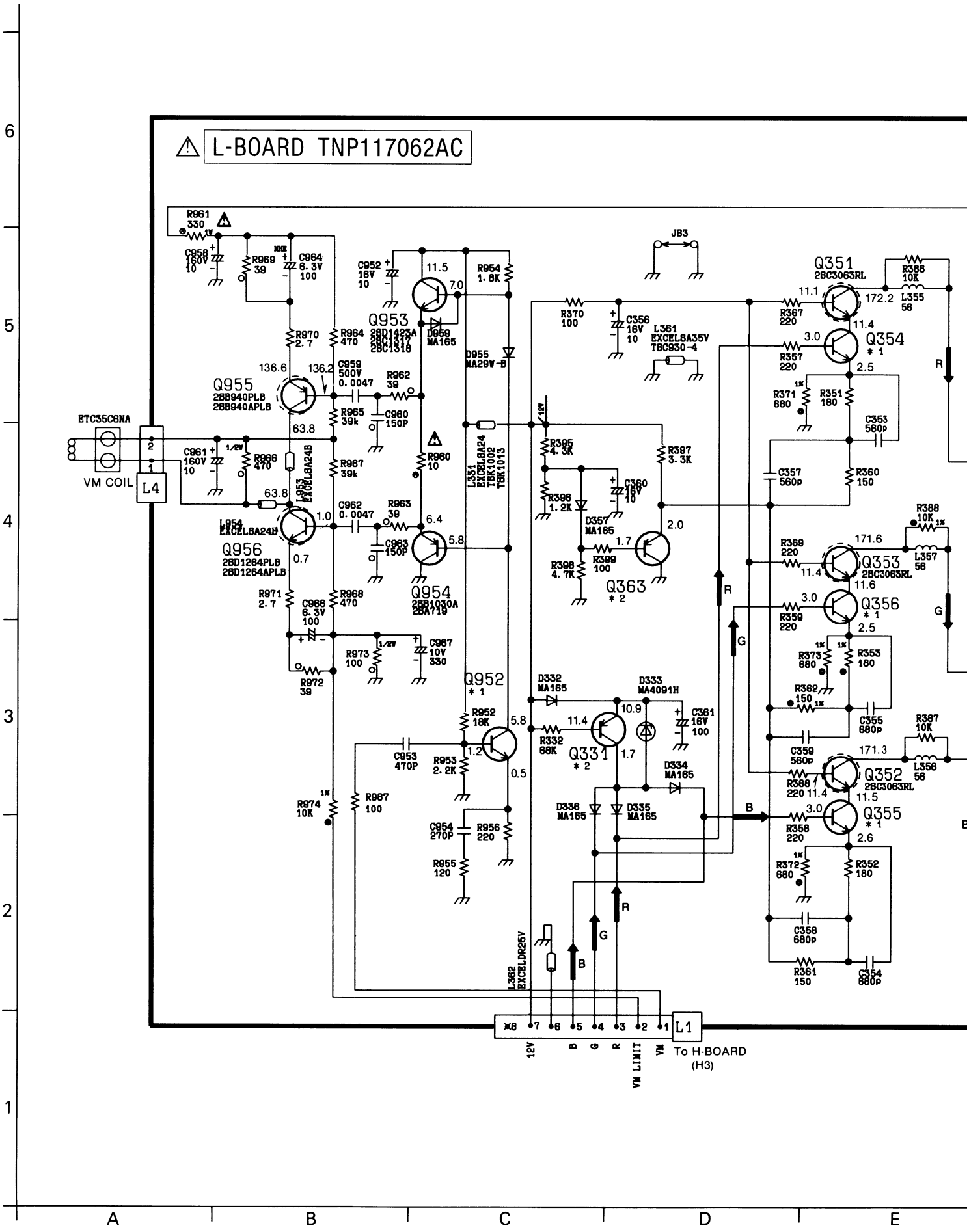
L-BOARD TNP117062AC
VM COIL
L4
ETC35C8NA
Q955
2SB940PLB
2SB940APLB
Q956
2SD1264PLB
2SD1264APLB
Q953
2SD1423A
2SC1317
2SC1318
Q954
2SB1030A
2SA719
Q952
* 1
Q331
* 2
Q363
* 2
Q351
2SC3063RL
Q354
* 1
Q353
2SC3063RL
Q356
* 1
Q352
2SC3063RL
Q355
* 1
J83
L1
To H-BOARD
(H3)
12V
B
G
R
VM LIMIT
VM

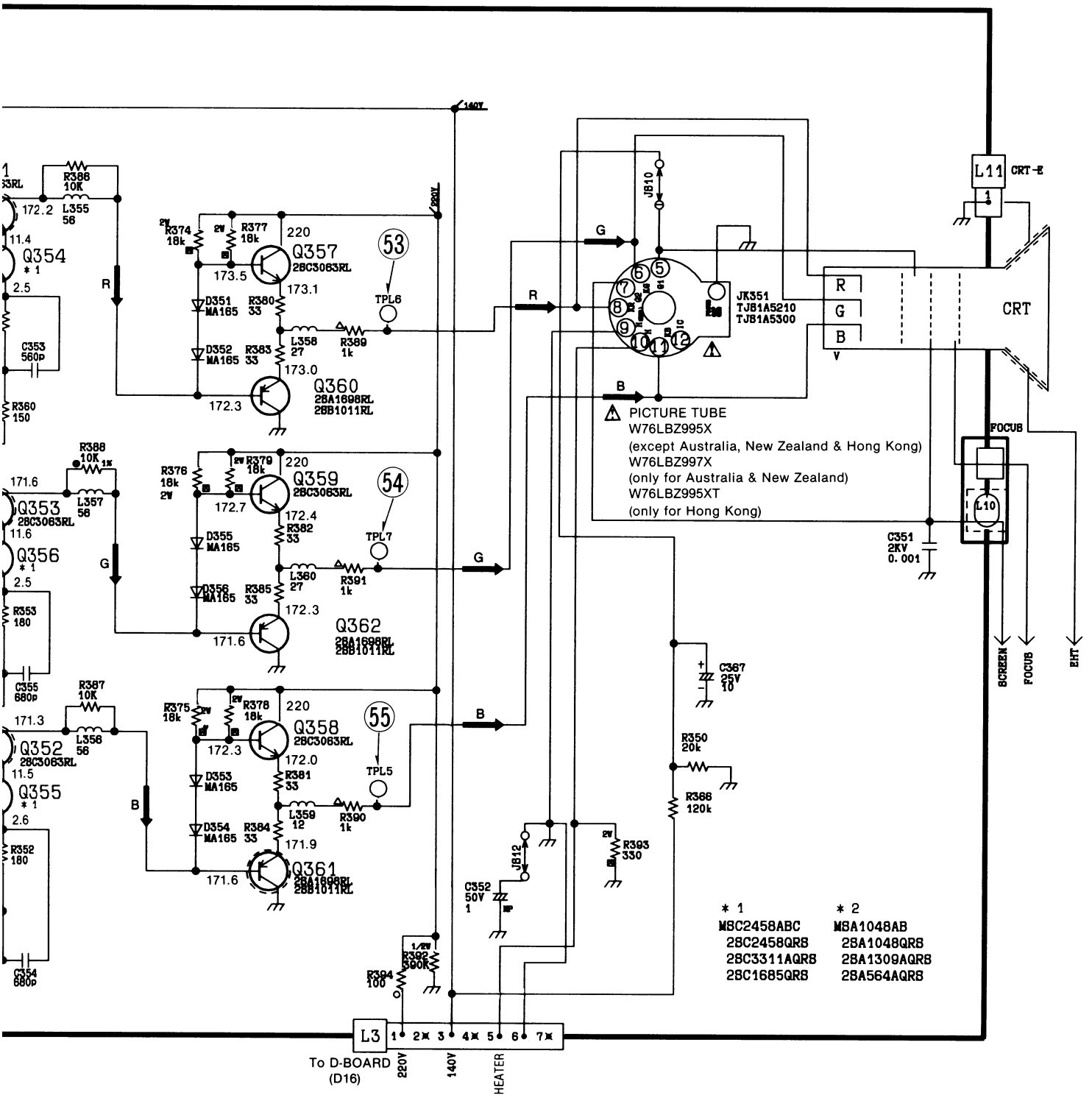

PICTURE TUBE
W76LBZ995X
(except Australia, New Zealand & Hong Kong)
W76LBZ997X
(only for Australia & New Zealand)
W76LBZ995XT
(only for Hong Kong)
JK351
TJB1A5210
TJB1A5300
CRT
CRT-E
FOCUS
SCREEN
EHT
Q354
Q353
Q356
Q352
Q355
Q357
Q360
Q359
Q362
Q358
Q361
2SC3063RL
2SA1698RL
2SB1011RL
TPL6
TPL7
TPL5
L3
To D-BOARD
(D16)
220V
140V
HEATER
* 1
MSC2458ABC
2SC2458QRS
2SC3311AQRS
2SC1685QRS
* 2
MSA1048AB
2SA1048QRS
2SA1309AQRS
2SA564AQRS

E F G H I

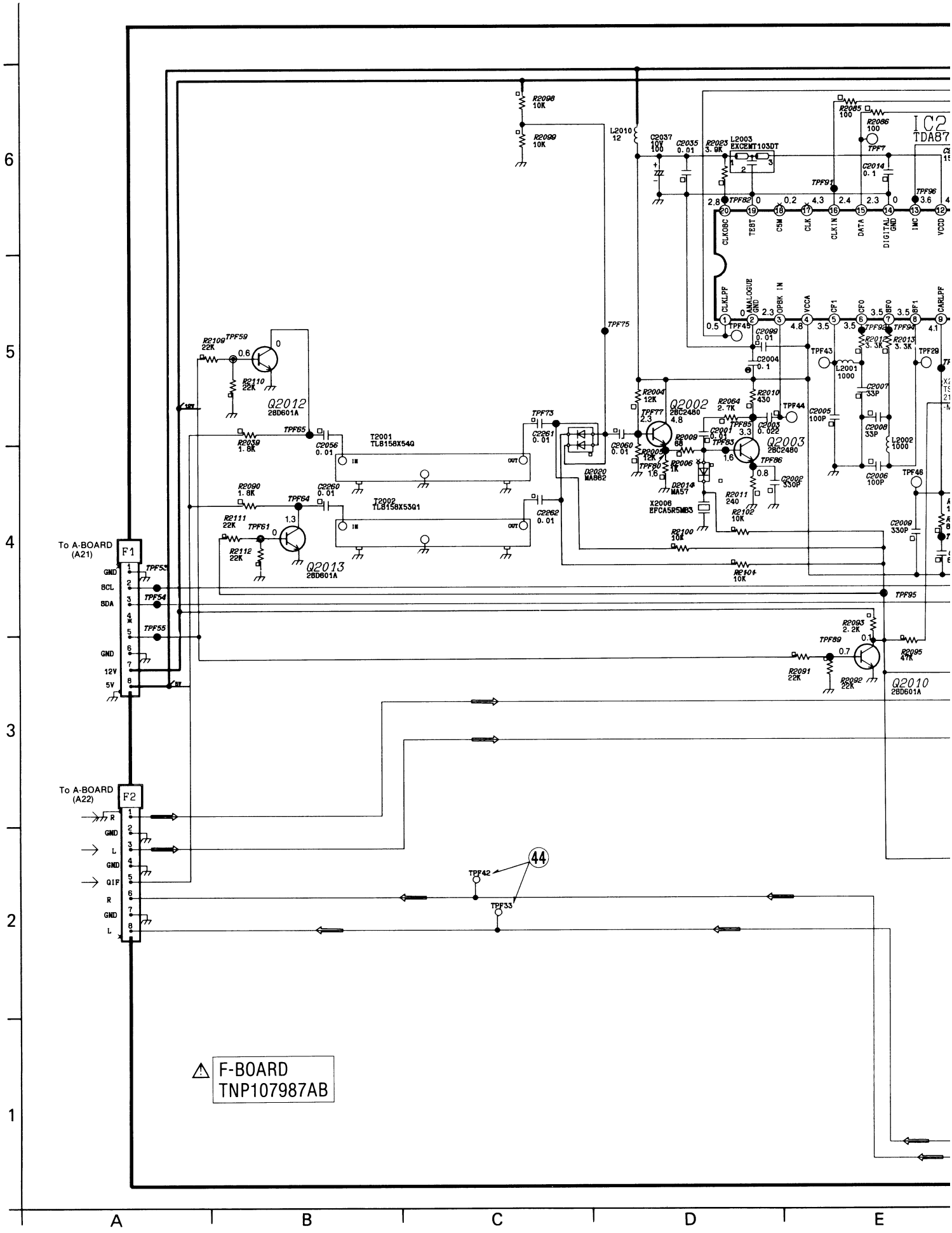
To A-BOARD (A21)
F1
GND
BCL
BDA
GND
12V
5V
To A-BOARD (A22)
F2
R
GND
L
GND
QIF
R
GND
L
IC2
TDA87
CLKOBC
TEST
CSM
CLK
CLKIN
DATA
DIGITAL GND
IMC
VCCD
CLKLPF
ANALOGUE GND
OPBK IN
VCCA
CF1
CFO
BFO
BF1
CARLPF
Q2012
2SD601A
Q2013
2SD601A
Q2002
2SC2460
Q2003
2SC2460
Q2010
2SD601A
T2001
TLB158X54Q
T2002
TLB158X53Q1
D2020
MA862
D2014
MA57
X2006
EFCA5R5MB3
L2003
EXCEMT103DT
L2001
1000
L2002
1000
F-BOARD
TNP107987AB

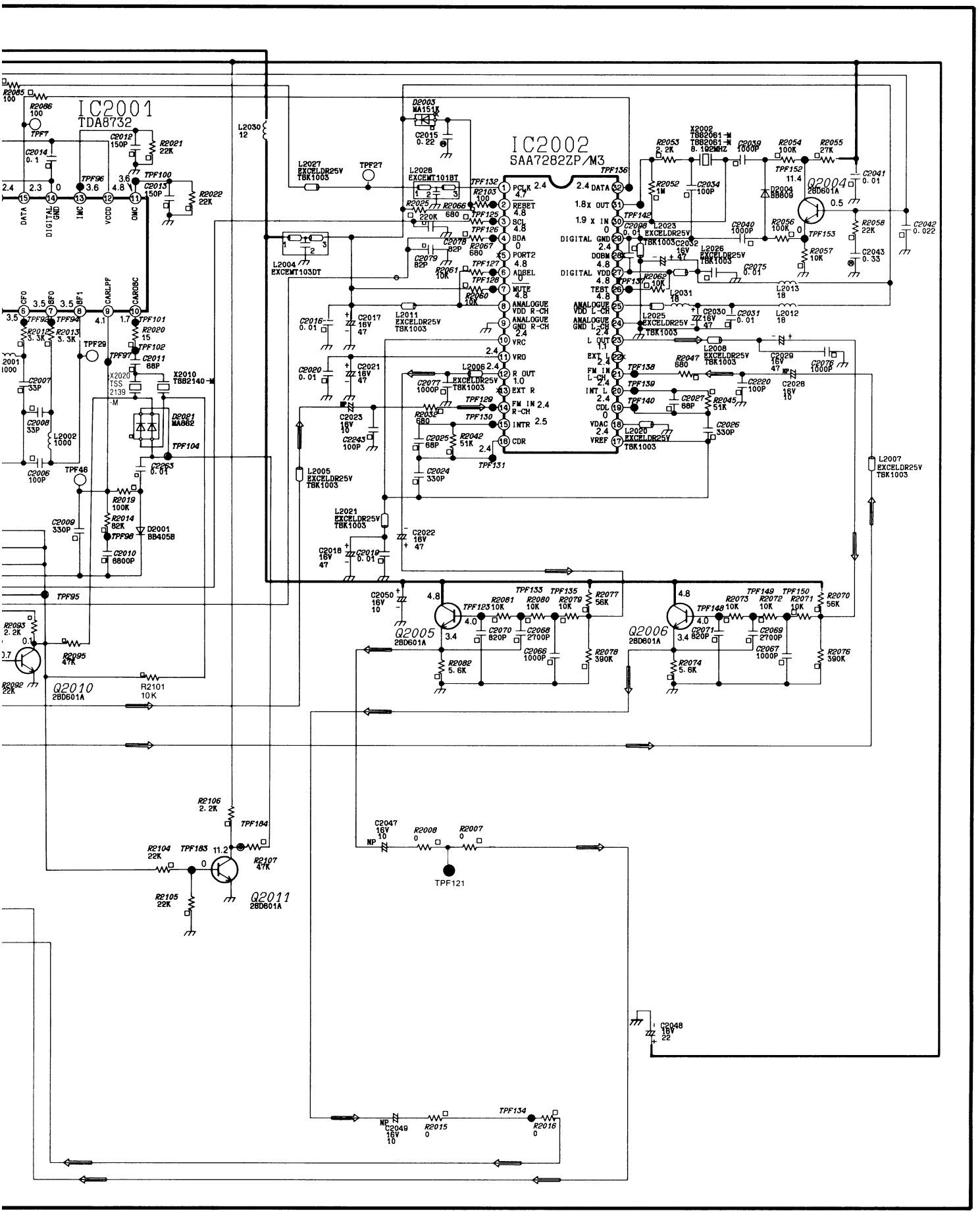
IC2001
TDA8732
IC2002
SAA7282ZP/M3
Q2004
2SD601A
Q2005
2SD601A
Q2006
2SD601A
Q2010
2SD601A
Q2011
2SD601A
X2010
TSS 2139 -M
X2002
TSS2061-M
8.192MHZ
L2004
EXCEMT103DT
L2027
EXCELDR25V
TSK1003
L2028
EXCEMT101BT
D2003
MA151K
D2021
MA862
D2001
BB405B
D2004
BB609
L2002
1000
L2030
12
L2005
EXCELDR25V
TSK1003
L2021
EXCELDR25V
TSK1003
L2007
EXCELDR25V
TSK1003
L2008
EXCELDR25V
TSK1003
L2011
EXCELDR25V
TSK1003
L2012
18
L2013
18
L2023
EXCELDR25V
TSK1003
L2025
EXCELDR25V
TSK1003
L2026
EXCELDR25V
TSK1003
L2031
18
R2101
10K
R2106
2.2K
R2104
22K
R2105
22K
R2107
47K
R2095
47K
R2092
22K
R2093
2.2K
R2085
100
R2086
100
R2021
22K
R2022
22K
R2053
2.2K
R2052
1M
R2054
100K
R2055
27K
R2056
100K
R2057
10K
R2058
22K
R2045
51K
R2047
680
R2062
10K
R2061
10K
R2060
10K
R2067
680
R2066
680
R2025
220K
R2103
100
R2032
680
R2042
51K
R2077
56K
R2078
390K
R2070
56K
R2076
390K
R2082
5.6K
R2074
5.6K
R2008
0
R2007
0
R2015
0
R2016
0
C2015
0.22
C2014
0.1
C2012
150P
C2013
150P
C2016
0.01
C2017
16V
47
C2020
0.01
C2021
16V
47
C2023
16V
10
C2243
100P
C2024
330P
C2025
68P
C2077
1000P
C2078
82P
C2079
82P
C2018
16V
47
C2019
0.01
C2022
16V
47
C2050
16V
10
C2047
16V
10
C2049
16V
10
C2048
16V
22
C2007
33P
C2008
33P
C2006
100P
C2009
330P
C2010
6800P
C2011
68P
C2263
0.01
C2034
100P
C2039
1000P
C2040
1000P
C2041
0.01
C2042
0.022
C2043
0.33
C2075
0.01
C2098
0.01
C2032
16V
47
C2030
16V
47
C2031
0.01
C2029
16V
47
C2076
1000P
C2220
100P
C2027
68P
C2026
330P
C2028
16V
10
C2070
820P
C2068
2700P
C2066
1000P
C2071
820P
C2069
2700P
C2067
1000P
TPF121
TPF134
NP

E F G H I

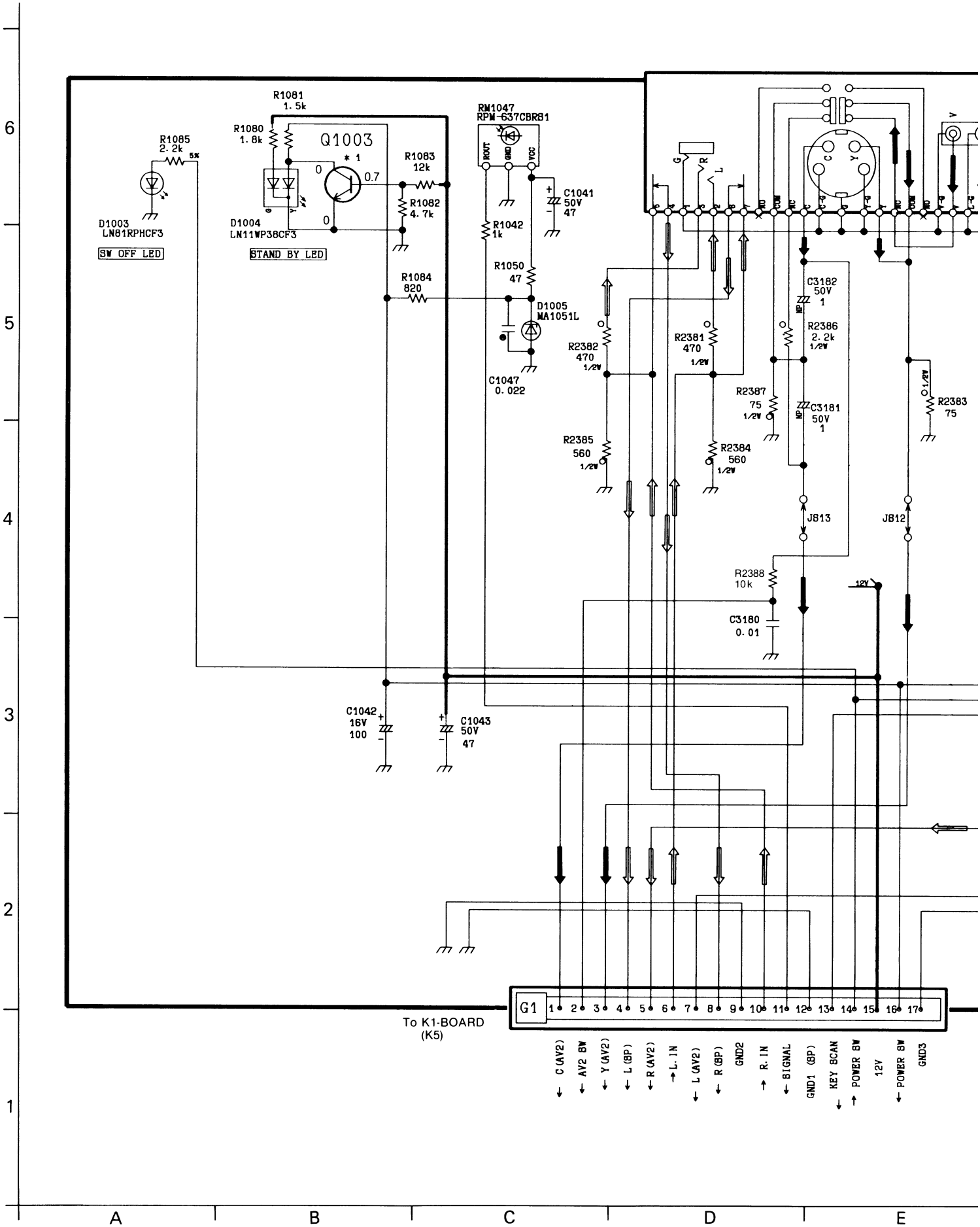
R1085
2.2k
5%
D1003
LN81RPHCF3
SW OFF LED
R1081
1.5k
R1080
1.8k
Q1003
* 1
0
0.7
D1004
LN11WP38CF3
STAND BY LED
R1083
12k
R1082
4.7k
RM1047
RPM-637CBR81
ROUT
GND
VCC
C1041
50V
47
R1042
1k
R1050
47
R1084
820
D1005
MA1051L
C1047
0.022
R2382
470
1/2W
R2381
470
1/2W
R2385
560
1/2W
R2384
560
1/2W
R2387
75
1/2W
C3182
50V
1
R2386
2.2k
1/2W
C3181
50V
1
R2383
75
J813
J812
R2388
10k
C3180
0.01
12V
C1042
16V
100
C1043
50V
47
G1
To K1-BOARD
(K5)
C (AV2)
AV2 SW
Y (AV2)
L (BP)
R (AV2)
L. IN
L (AV2)
R (BP)
GND2
R. IN
SIGNAL
GND1 (BP)
KEY SCAN
POWER SW
12V
POWER SW
GND3

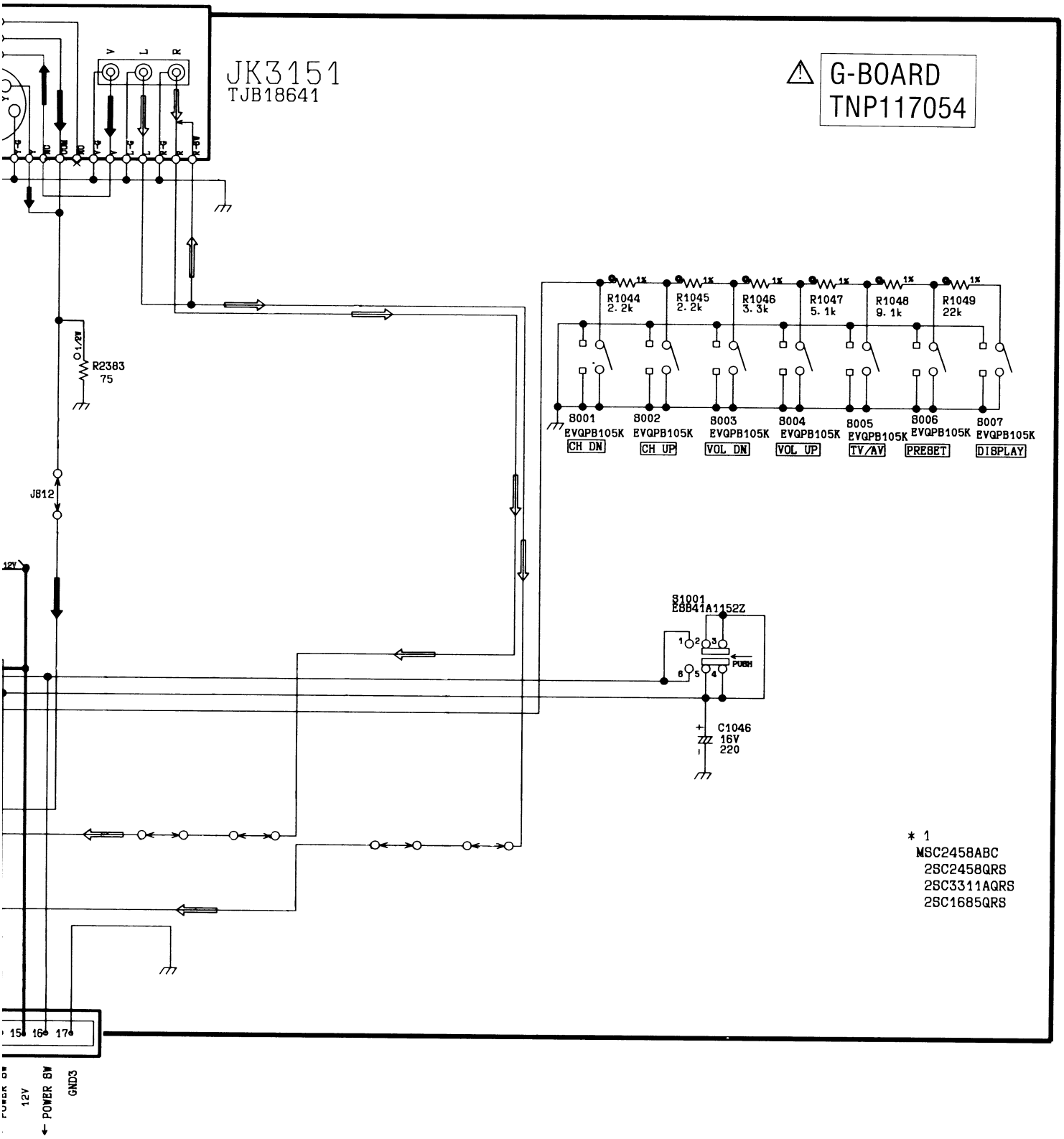
JK3151
TJB18641
G-BOARD
TNP117054
R2383
75
J812
12V
R1044
2.2k
R1045
2.2k
R1046
3.3k
R1047
5.1k
R1048
9.1k
R1049
22k
S001
EVQPB105K
CH DN
S002
EVQPB105K
CH UP
S003
EVQPB105K
VOL DN
S004
EVQPB105K
VOL UP
S005
EVQPB105K
TV/AV
S006
EVQPB105K
PRESET
S007
EVQPB105K
DISPLAY
S1001
ESB41A1152Z
PUSH
C1046
16V
220
* 1
MSC2458ABC
2SC2458QRS
2SC3311AQRS
2SC1685QRS
15
16
17
POWER ON
12V
POWER SW
GND3

E F G H I

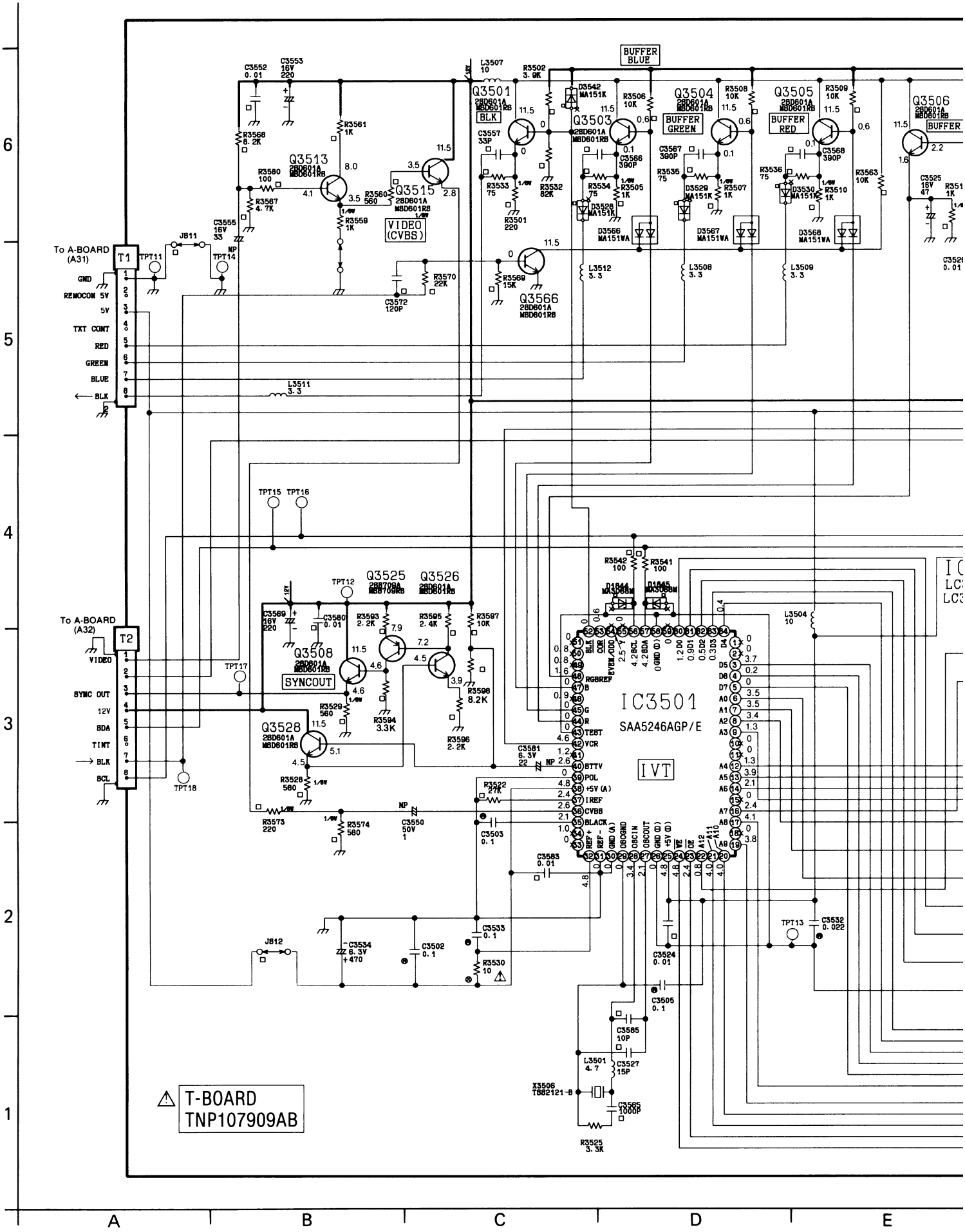
To A-BOARD (A31)
T1
GND
REMOCON 5V
5V
TXT CONT
RED
GREEN
BLUE
BLK
To A-BOARD (A32)
T2
VIDEO
SYNC OUT
12V
SDA
TINT
BLK
SCL
Q3501
BLK
Q3503
BUFFER BLUE
Q3504
BUFFER GREEN
Q3505
BUFFER RED
Q3506
BUFFER
Q3513
Q3515
VIDEO (CVBS)
Q3566
Q3525
Q3526
Q3508
SYNCOUT
Q3528
IC3501
SAA5246AGP/E
IVT
T-BOARD
TNP107909AB

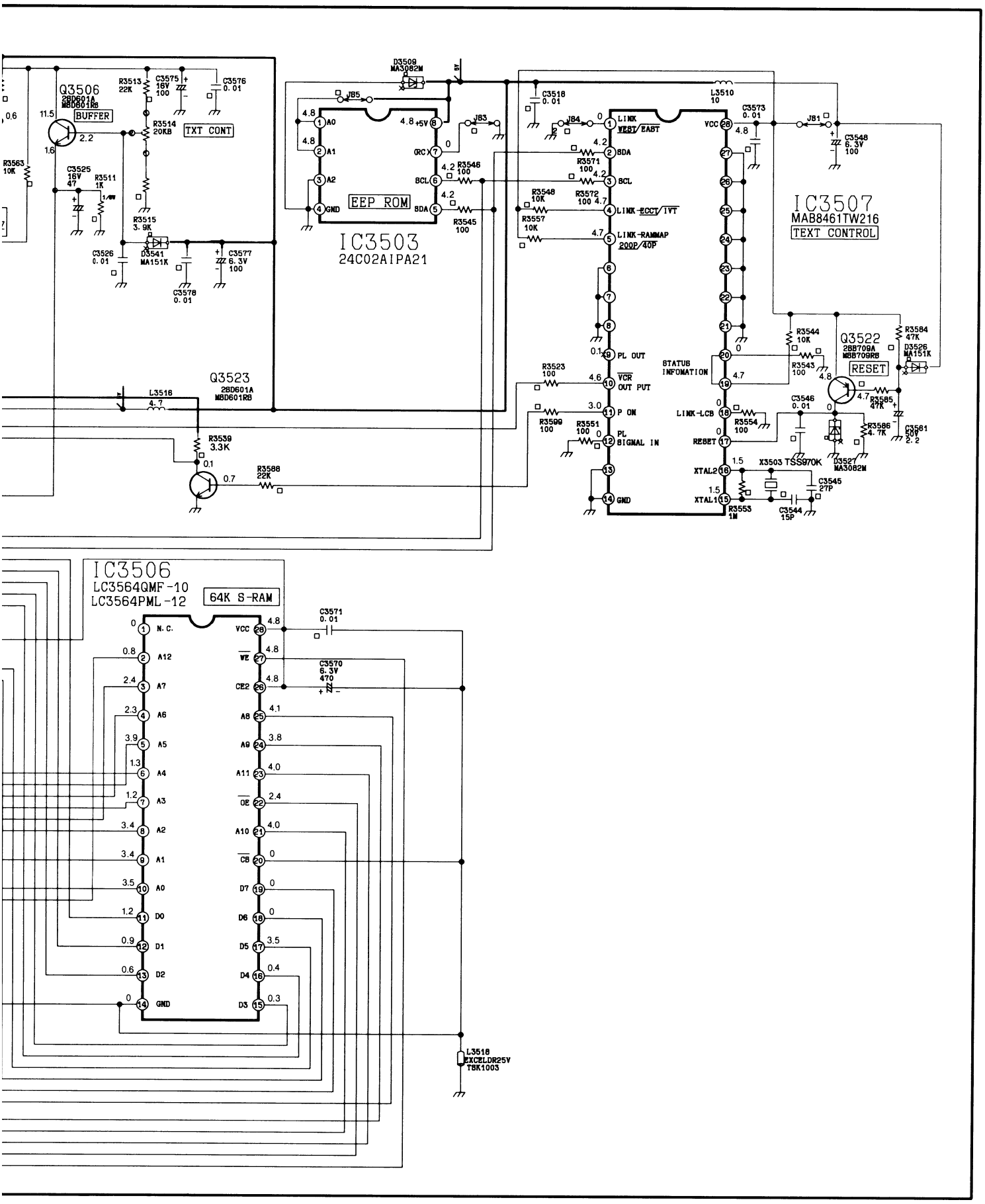
Q3506
2SD601A
MSD601RB
BUFFER
TXT CONT
R3513 22K
C3575 16V 100
C3576 0.01
R3514 20KB
R3563 10K
C3525 16V 47
R3511 1K
R3515 3.9K
D3541 MA151K
C3526 0.01
C3577 6.3V 100
C3578 0.01
D3509 MA3082M
J85
J83
EEP ROM
IC3503
24C02AIPA21
R3546 100
R3545 100
C3518 0.01
L3510 10
J84
LINK WEST/EAST
BDA
BCL
R3571 100
R3572 100
R3548 10K
R3557 10K
LINK-ECCT/IVT
LINK-RAMMAP 200P/40P
PL OUT
VCR OUT PUT
P ON
PL SIGNAL IN
GND
VCC
STATUS INFOMATION
LINK-LCB
RESET
XTAL2
XTAL1
IC3507
MAB8461TW216
TEXT CONTROL
C3573 0.01
J81
C3548 6.3V 100
R3544 10K
R3543 100
Q3522
2SB709A
MSB709RB
RESET
R3584 47K
D3526 MA151K
R3585 47K
C3546 0.01
R3586 4.7K
C3561 50V 2.2
R3554 100
X3503 TSS970K
D3527 MA3082M
C3545 27P
C3544 15P
R3553 1M
Q3523
2SD601A
MSD601RB
L3516 4.7
R3539 3.3K
R3588 22K
R3523 100
R3599 100
R3551 100
IC3506
LC3564QMF-10
LC3564PML-12
64K S-RAM
N.C.
A12
A7
A6
A5
A4
A3
A2
A1
A0
D0
D1
D2
GND
VCC
WE
CE2
A8
A9
A11
OE
A10
CS
D7
D6
D5
D4
D3
C3571 0.01
C3570 6.3V 470
L3518 EXCELDR25V TSK1003

E F G H I

Таблица сигналограмм

① TPD28, TPD27 62Vp–p(5msec)	② TPD31, TPD32 1.7Vp–p(5msec)	③ Q551–B 20Vp–p(20μsec)	④ TPD25, TPD26 1300Vp–p(20μsec)
⑤ TPD15 3.2Vp–p(5msec)	⑥ TPD35 0.9Vp–p(20μsec)	⑦ IC801–1 675Vp–p(5μsec)	⑧ TPA40 4.8Vp–p(20μsec)
⑨ TPA41 4.8Vp–p(20μsec)	⑩ TPA42 4.8Vp–p(20μsec)	⑪ IC601–6 4.8Vp–p(20μsec)	⑫ IC601–20 0.8Vp–p(20μsec)
⑬ IC601–10 8.8Vp–p(20μsec)	⑭ IC601–35 0.55Vp–p(20μsec)	⑮ TPA39 1.1Vp–p(20μsec)	⑯ TPA38 1.0Vp–p(20μsec)
⑰ IC601–49, 51 0.7Vp–p(20μsec)	⑱ IC601–58 0.6Vp–p(20μsec)	⑲ IC601–60 1.0Vp–p(20μsec)	⑳ IC601–63 1.8Vp–p(20μsec)
㉑ IC601–64 5.3Vp–p(5msec)	㉒ IC701–4 2.0Vp–p(5msec)	㉓ IC701–6 1.5Vp–p(5msec)	㉔ IC701–8 2.2Vp–p(5msec)
㉕ IC701–13 4.7Vp–p(5msec)	㉖ IC701–14 3.0Vp–p(5msec)	㉗ IC701–15 3.0Vp–p(5msec)	㉘ IC452–2 65Vp–p(5msec)

Таблица сигналограмм

29 IC452-5 0.7Vp-p(5msec)	30 IC452-7 37.8Vp-p(5msec)	31 IC6601-2 5.8Vp-p(20μsec)	32 IC6601-5 8.9Vp-p(20μsec)
33 IC6601-10 8.6Vp-p(20μsec)	34 IC6601-14 8.7Vp-p(20μsec)	35 IC3301-14 0.8Vp-p(20μsec)	36 IC3301-18 0.9Vp-p(20μsec)
37 IC3301-26 1.3Vp-p(20μsec)	38 IC3301-31 1.8Vp-p(20μsec)	39 IC3603-2, 11 1.8Vp-p(20μsec)	40 IC5502-11 1.8Vp-p(20μsec)
41 IC5503-11 0.9Vp-p(20μsec)	42 TPB15 1.9Vp-p(20μsec)	43 TPB9, B10 1.1Vp-p(0.5msec)	44 TPF33, 42 1.1Vp-p(0.5msec)
45 TPH3 4.8Vp-p(20μsec)	46 TPH4 4.4Vp-p(20μsec)	47 TPH5 4.4Vp-p(20μsec)	48 Q3006-E 2.3Vp-p(20μsec)
49 Q3015-C Q6016-C 2.3Vp-p(0.5msec)	50 IC3001-40, 56 0.7Vp-p(20μsec)	51 IC3002-42 2.3Vp-p(20μsec)	52 IC3002-44, 53 2.0Vp-p(20μsec)
53 TPL6 140Vp-p(20μsec)	54 TPL7 128Vp-p(20μsec)	55 TPL5 128Vp-p(20μsec)	