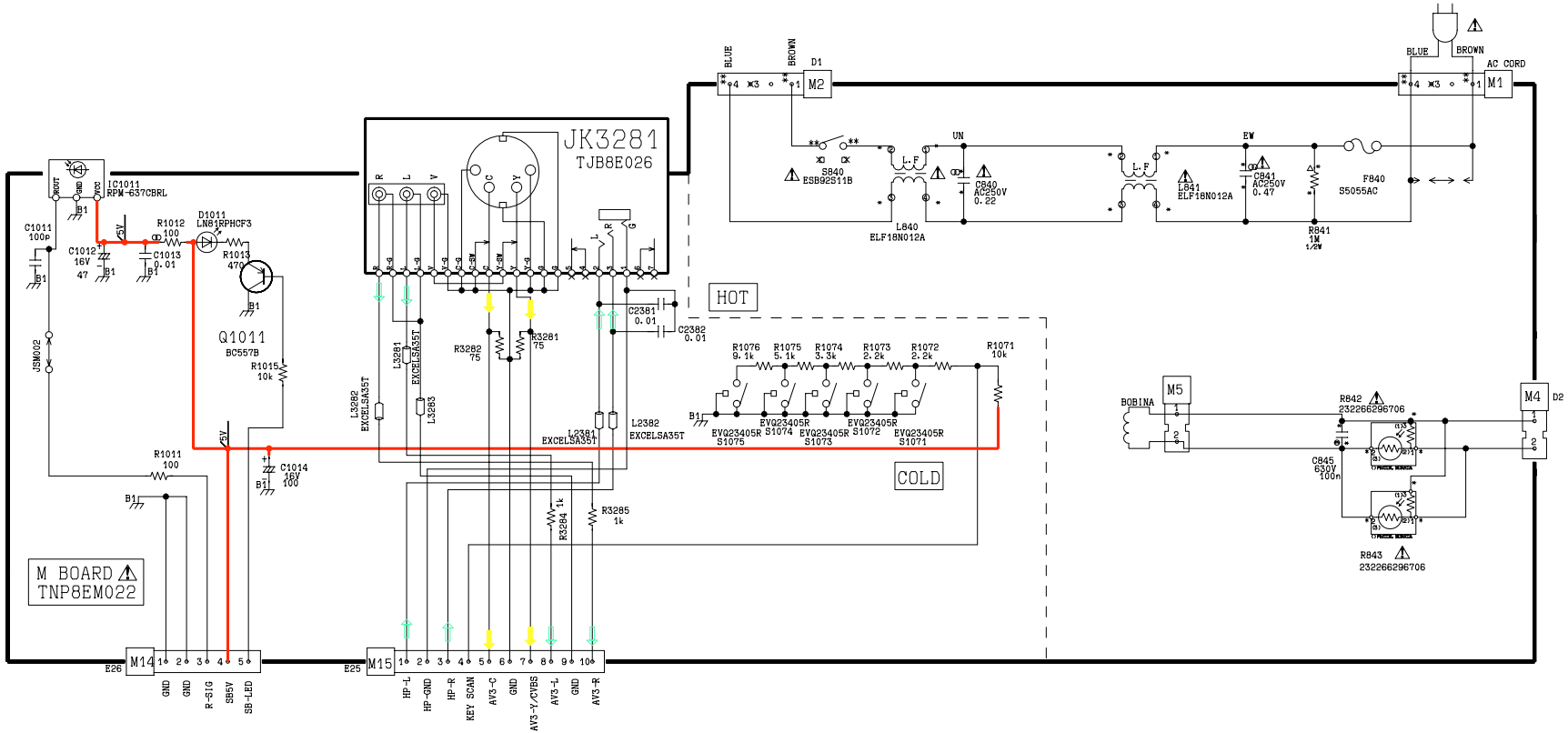
IC1011
RPM-637CBRL
C1011
100p
C1012
16V
47
R1012
100
C1013
0.01
D1011
LN81RPHCF3
R1013
470
Q1011
BC557B
R1015
10k
JSM002
R1011
100
C1014
16V
100
M BOARD
TNP8EM022
M14
E26
GND
GND
R-SIG
SB5V
SB-LED
JK3281
TJB8E026
R
L
V
C
Y
L
R
G
L3282
EXCELSA35T
L3281
EXCELSA35T
L3283
R3282
75
R3281
75
C2381
0.01
C2382
0.01
L2381
EXCELSA35T
L2382
EXCELSA35T
R3284
1k
R3285
1k
M15
E25
HP-L
HP-GND
HP-R
KEY SCAN
AV3-C
GND
AV3-Y/CVBS
AV3-L
GND
AV3-R
HOT
COLD
R1076
9.1k
R1075
5.1k
R1074
3.3k
R1073
2.2k
R1072
2.2k
R1071
10k
EVQ23405R
S1075
EVQ23405R
S1074
EVQ23405R
S1073
EVQ23405R
S1072
EVQ23405R
S1071
BLUE
BROWN
D1
M2
S840
ESB92511B
UN
L.F
C840
AC250V
0.22
L840
ELF18N012A
EW
L.F
L841
ELF18N012A
C841
AC250V
0.47
R841
1M
1/2W
F840
S5055AC
BLUE
BROWN
AC CORD
M1
M5
BOBINA
R842
232266296706
C845
630V
100n
R843
232266296706
M4
D2

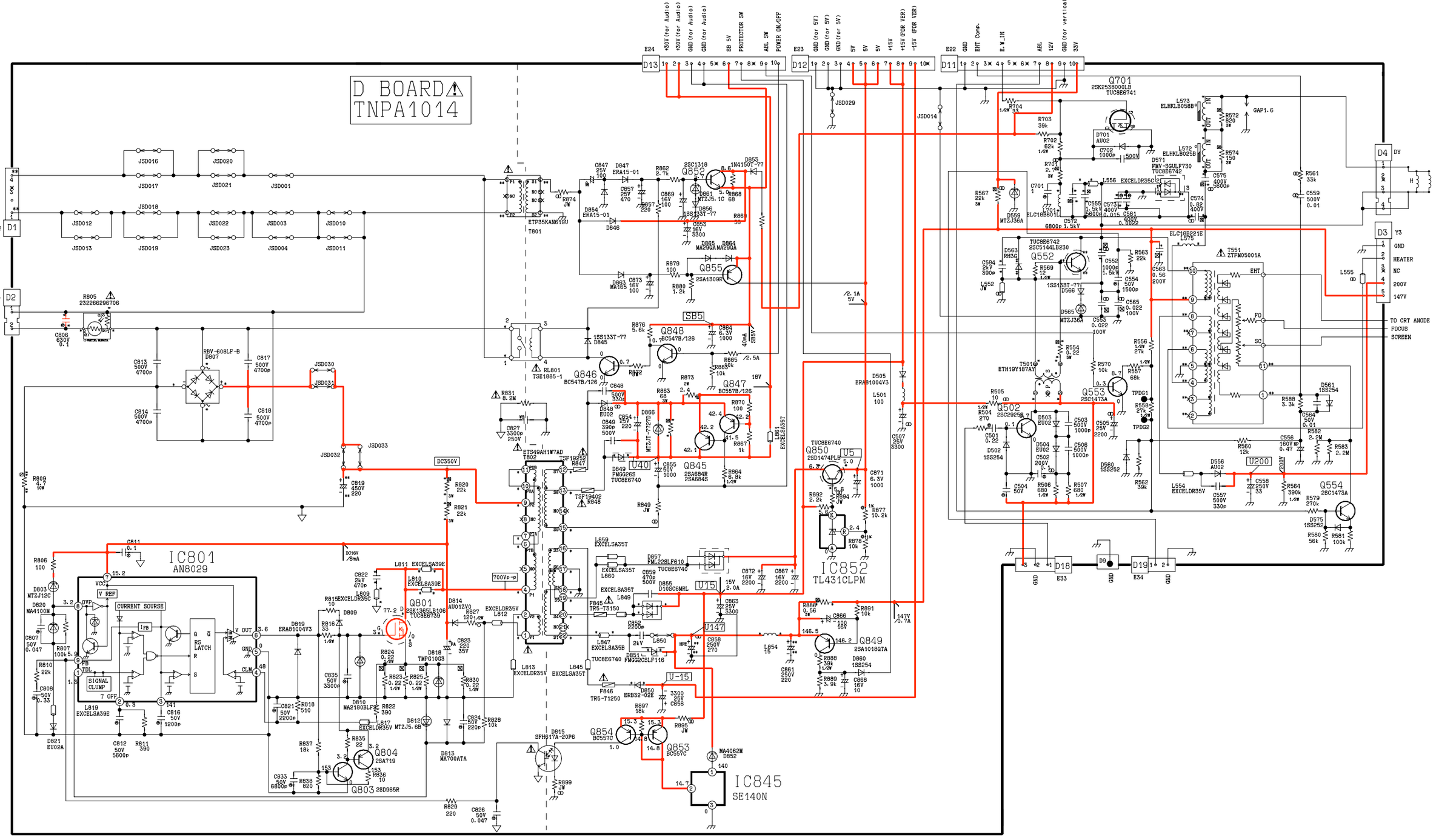
D BOARD
TNPA1014
IC801
AN8029
IC852
TL431CLPM
IC845
SE140N
Q801
2SK1365LB106
TUCBE6739
Q804
2SA719
Q803
2SD965R
Q852
2SC1318
Q855
2SA1309R
Q848
BC547B/126
Q846
BC547B/126
Q847
BC557B/126
Q845
2SA684R
2SA684S
Q850
2SD1474PLB
Q849
2SA1018QTA
Q854
BC557C
Q853
BC557C
Q701
2SK2530000LB
TUCBE6741
Q552
2SC5144LB230
Q502
2SC2925
Q553
2SC1473A
Q554
2SC1473A
T801
ETP35KAN619U
T802
ET349AH1W7AD
T501
ETH19Y187AY
T551
2TFM05001A
D1
D2
D3
D4
D11
D12
D13
D18
D19
SB5
U40
U15
U147
U-15
U5
U200
DC350V
700Vp-p
147V
2.1A
5V
18V
40mA
SB7V
DY
Y3
GND
HEATER
NC
200V
147V
TO CRT ANODE
FOCUS
SCREEN
GAP1.6
EHT
FO
SC
H
V REF
CURRENT SOURSE
SIGNAL CLUMP
RS LATCH
V OUT
T OFF
OVP
FB
TDL
CLM
GND
VCC
IFB

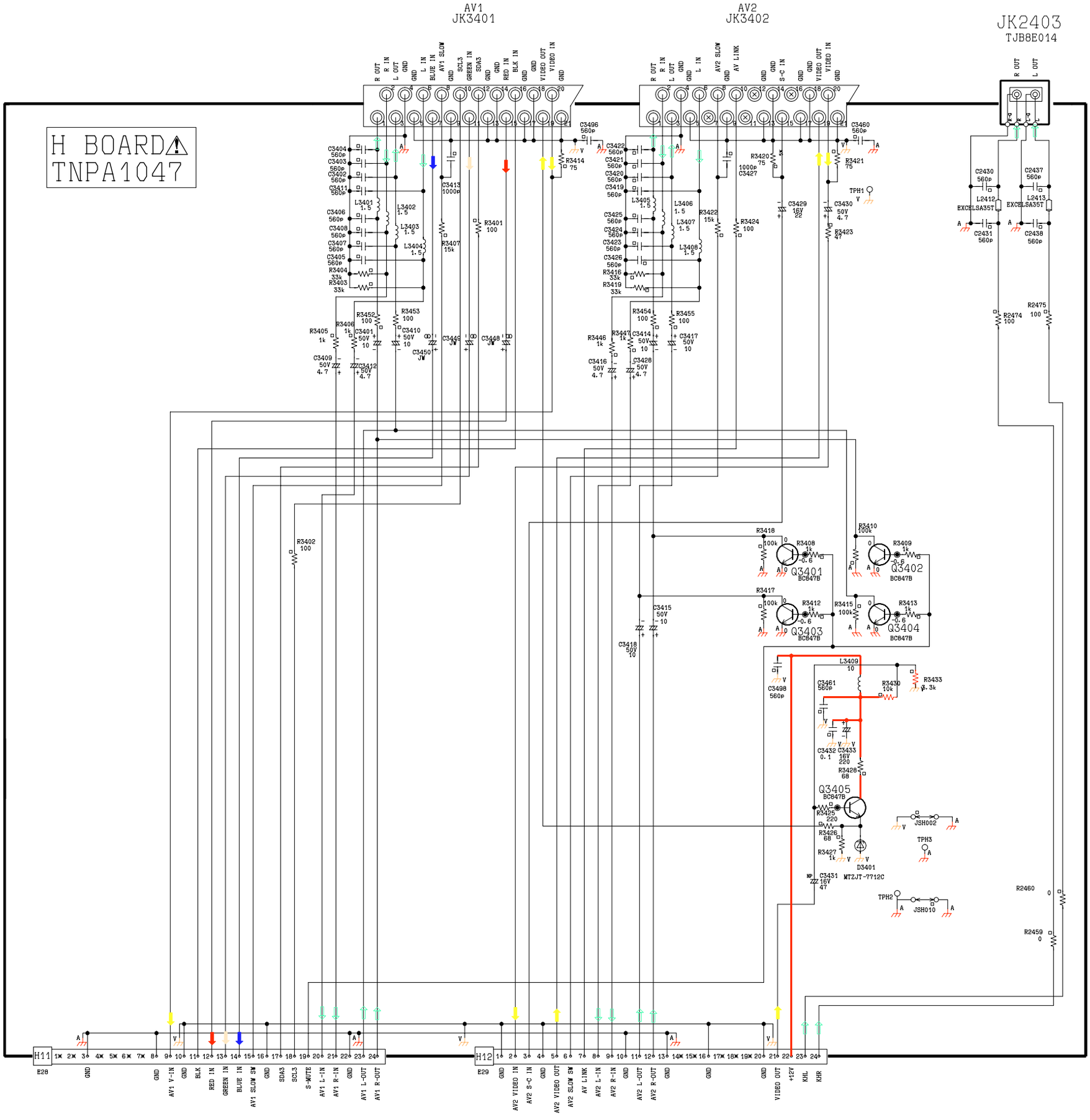
H BOARD
TNPA1047
AV1
JK3401
AV2
JK3402
JK2403
TJB8E014
R OUT
R IN
L OUT
GND
L IN
BLUE IN
AV1 SLOW
SCL3
GREEN IN
SDA3
RED IN
BLK IN
VIDEO OUT
VIDEO IN
AV2 SLOW
AV LINK
S-C IN
Q3401
BC847B
Q3402
BC847B
Q3403
BC847B
Q3404
BC847B
Q3405
BC847B
D3401
MTZJT-7712C
H11
E28
H12
E29
AV1 Y-IN
AV1 L-IN
AV1 R-IN
AV1 L-OUT
AV1 R-OUT
AV2 VIDEO IN
AV2 S-C IN
AV2 VIDEO OUT
AV2 SLOW SW
AV2 L-IN
AV2 R-IN
AV2 L-OUT
AV2 R-OUT
VIDEO OUT
+12V
KHL
KHR

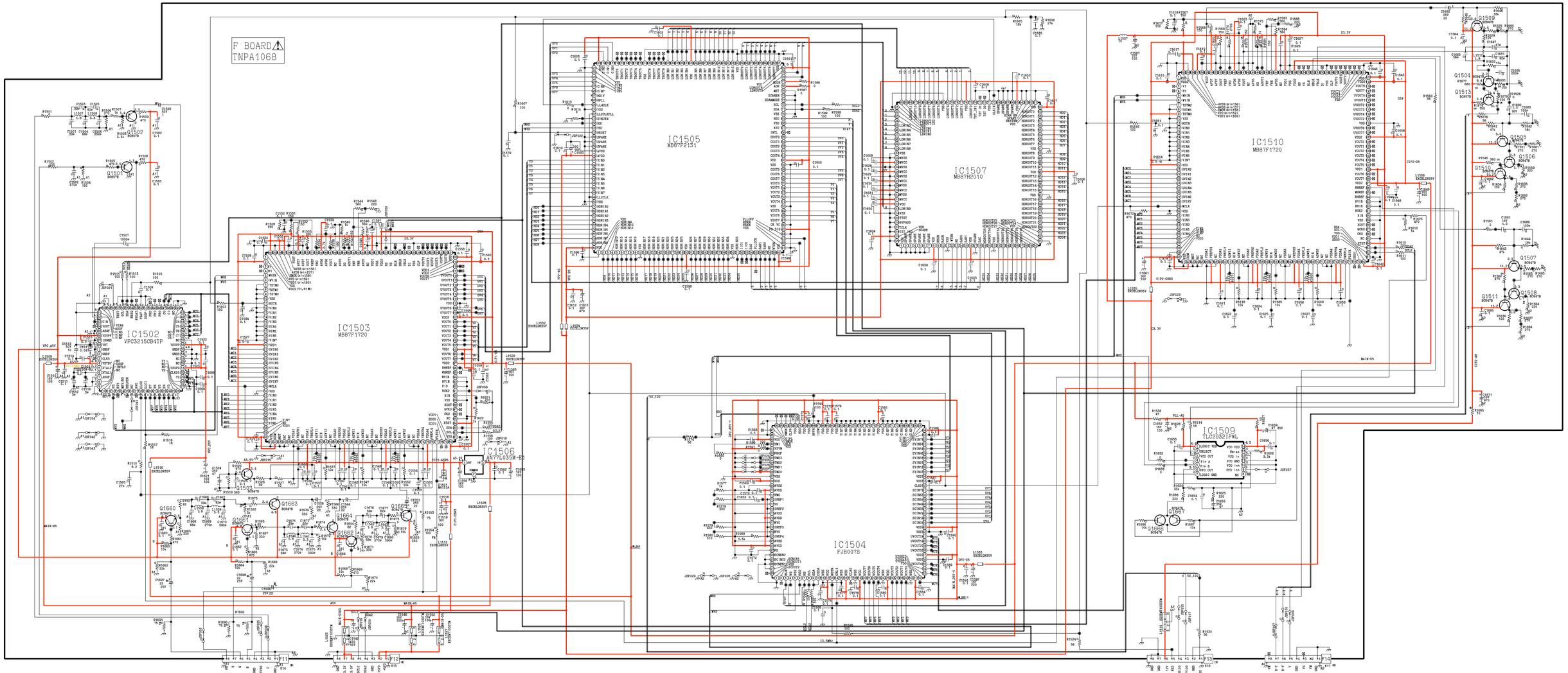
F BOARD
TNPA1068
IC1505
MB87F2131
IC1507
MB87H2010
IC1510
MB87F1720
IC1503
MB87F1720
IC1502
VPC3215CB4TD
IC1506
AN7L035M-E1
IC1504
FJB007S
IC1509
TLC29321PWL
Q1502
Q1501
Q1503
Q1504
Q1513
Q1505
Q1506
Q1510
Q1507
Q1508
Q1511
Q1660
Q1663
Q1664
Q1667
Q1668
Q1669
Q1665
Q1507
F11
F12
F13
F14

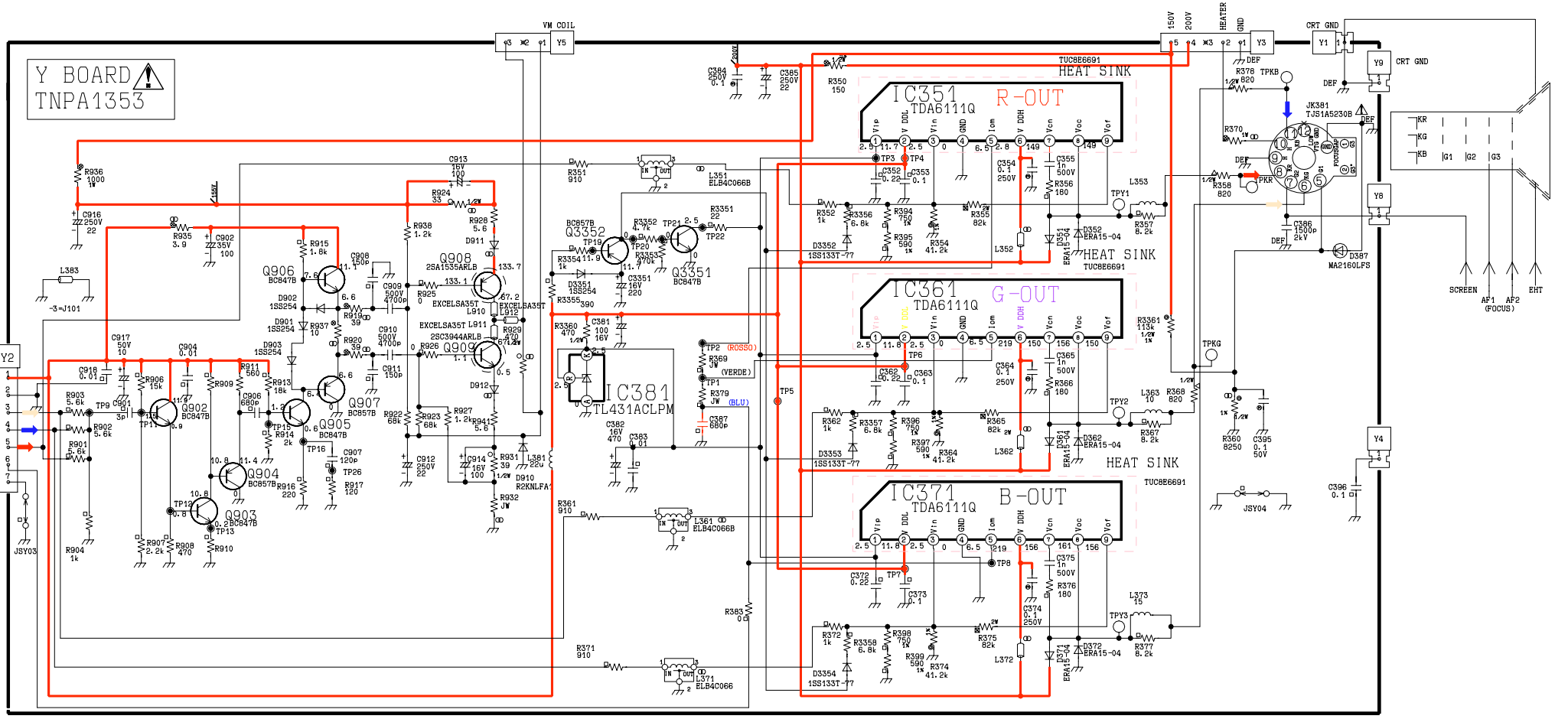
Y BOARD
TNPA1353
IC351
TDA6111Q
R-OUT
IC361
TDA6111Q
G-OUT
IC371
TDA6111Q
B-OUT
IC381
TL431ACLPM
HEAT SINK
TUC8E6691
VM COIL
CRT GND
HEATER
SCREEN
AF1
AF2
(FOCUS)
EHT
JK381
TJS1A5230B
Q906
BC847B
Q907
BC857B
Q908
2SA1535ARLB
Q909
2SC3944ARLB
Q902
BC847B
Q903
2SC847B
Q904
BC857B
Q905
BC847B
Q3352
BC857B
Q3351
BC847B
L351
ELB4C066B
L361
ELB4C066B
L371
ELB4C066
L383
-3=J101
JSY03
JSY04
D387
MA2160LFS
D910
R2KNLFA

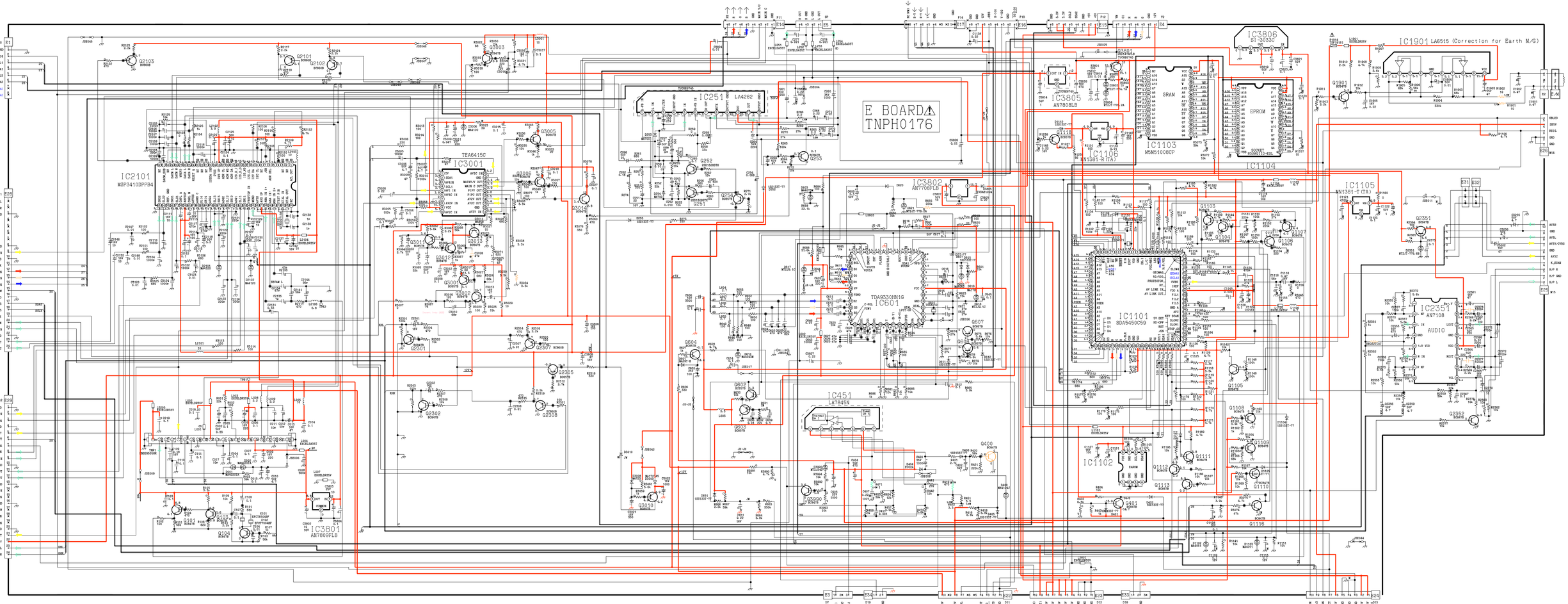
E BOARD
TNPH0176
IC2101
M5P34100PPPB4
IC3001
TEA6415C
IC251
LA4282
IC3802
AN7708FLB
IC3806
S1-3033C
IC3305
AN7808LB
IC1106
MN1381-T(TA)
IC1103
M5M51008CP
IC1104
IC1901
LA6515 (Correction for Earth M/G)
IC1105
MN1381-T(TA)
IC601
TDA9330HN1G
IC1101
SDA5450CS9
IC2351
AN7108
AUDIO
IC451
LA7845N
IC1102
IC3801
AN7809FLB