SCHEMA ELETTRICO

TX – 29AB50D

DE INGESLOTEN TECHNISCHE DOCUMENTATIE EN INSTELLINGEN ZIJN ALLEEN VAN TOEPASSING VOOR INSTELLINGEN VAN TELEVISIE SETS OP DE ITALIAANSE MARKT.

Panasonic

TQA8E2234

TELECOMANDO

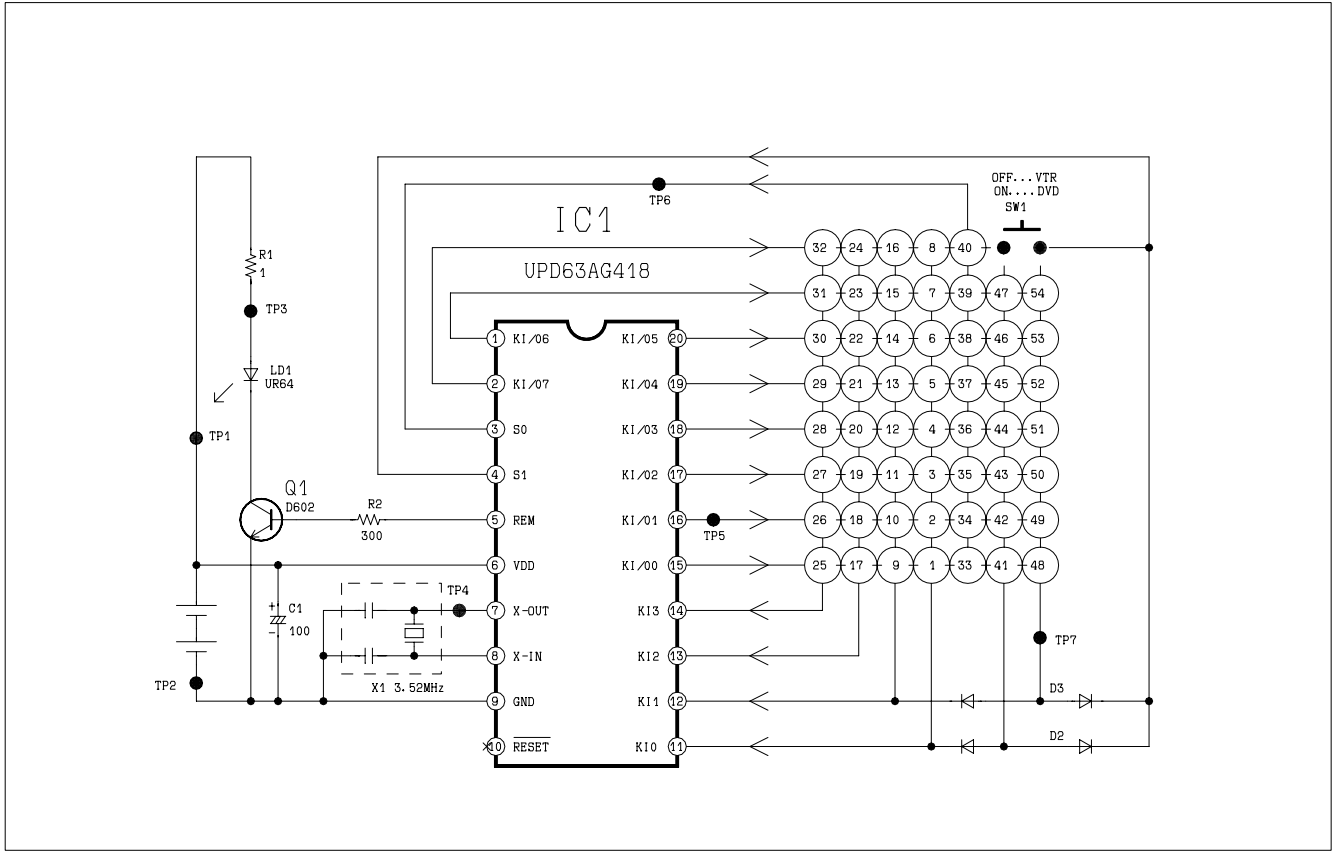

SINTONIZZATORE

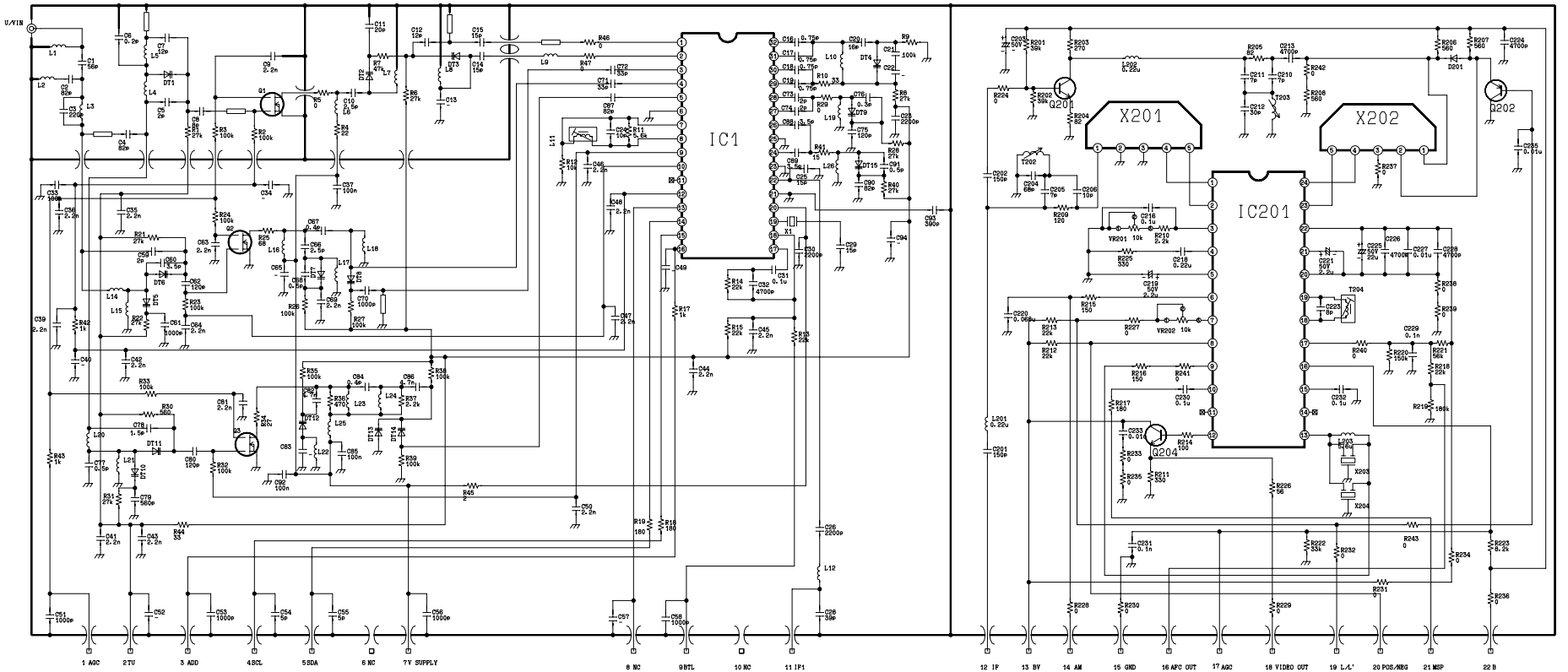

TEST POINT

FERRITE BEAD

TERMINAL SUPPLY VOLTAGE

TERMINAL NO:	TERMINAL NAME	SUPPLY VOLTAGE (V)			
		VHF			UHF
		LOW	HIGH	SUPER	
1	AGC	4.0 0. MAX			
2	TU	——			
3	ADD	——			
4	SCL	——			
5	SDA	——			
6	NC	——			
7	VCC	+5.0			
8	NC	——			
9	BTL	+32.0			
10	NC	——			
11	IF1	——			
12	IF	——			
13	BV	+5.0			
14	AM	——			
15	GND	——			
16	AFC OUT	——			
17	AGC	——			
18	VIDEO OUT	——			
19	L/L'	L :H1 L' :L0			
20	POS/NEG	POS :L0 NEG :H1			
21	MSP	——			
22	B	5.0V			

SYMBOL

SYMBOL	SYMBOL NO.	SEMICONDUCTOR
	R1-R47 , R201-243	RESISTANCE
	EXCEPT 16.20 50.51.53-57.60-62.68-71.73-75	
	C1-C94, C201 - C235	CAPACITANCE (F)
	EXCEPT 27.39.202.203.207.209 215.217.222.234	
	L1-L26, L201-L203	INDUCTANCE (H)
	EXCEPT 13	
	DT1-4.6	1T407, MA25374, 1SV290 HVC306B, HVC300B
	DT7.9.10.11	1T404, MA25357, 1SV288 HVC306B, 1SV283
	DT12-15.5.8	MA25372, 1T402, 1SV278 HVC202B
	D101.102.202	MA2277
	Q1.Q3	BB34, BF904, BSM4R01
	Q3	BF904, BF909, HFS201
	Q101-103	BF771
	Q201	2SC3951
	Q204	2SD1819A
	IC1	MT74
	IC201	TDA9610T
	X1	HC32KF1, HC92DF1
	X201	K5H53M100, K5H53D100
	X202	L936C100
	X203	EFC36R0MW5
	X204	EFC36R0MW5

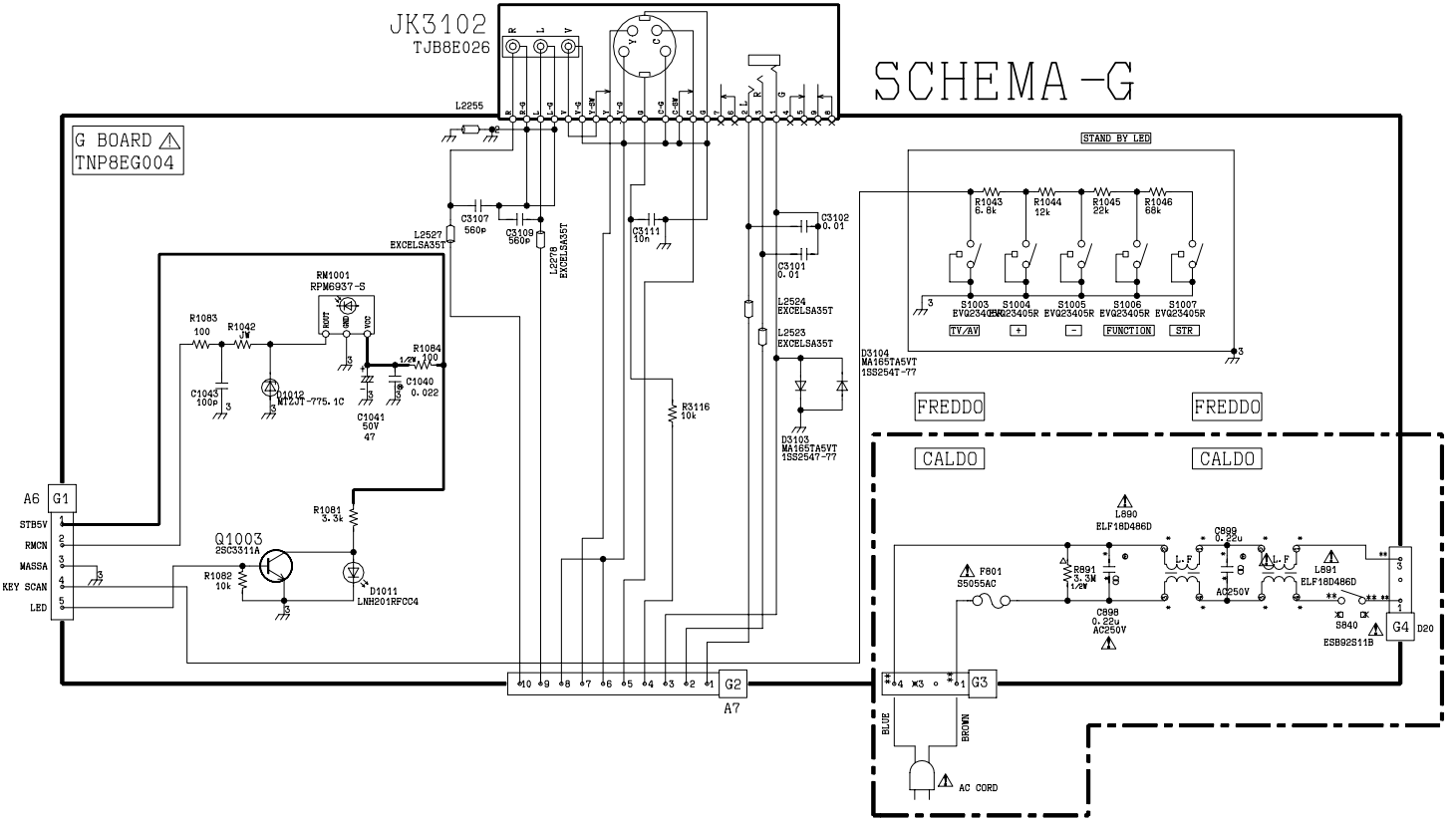
SCHEMA -G
JK3102
TJB8E026
G BOARD
TNP8EG004
L2255
C3107
560p
C3109
560p
L2527
EXCELSA35T
L2278
EXCELSA35T
C3111
10n
C3102
0.01
C3101
0.01
L2524
EXCELSA35T
L2523
EXCELSA35T
R3116
10k
D3103
MA165TA5VT
1SS254T-77
D3104
MA165TA5VT
1SS254T-77
RM1001
RPM6937-S
R1083
100
R1042
JW
R1084
100
1/2W
C1040
0.022
C1045
100p
Q1012
M12JT-775.1C
C1041
50V
47
R1081
3.3k
Q1003
2SC3311A
R1082
10k
D1011
LNH201RFCC4
A6
G1
STB5V
RMCN
MASSA
KEY SCAN
LED
G2
A7
STAND BY LED
R1043
6.8k
R1044
12k
R1045
22k
R1046
68k
S1003
EVQ23405R
S1004
EVQ23405R
S1005
EVQ23405R
S1006
EVQ23405R
S1007
EVQ23405R
TV/AV
+
-
FUNCTION
STR
FREDDO
FREDDO
CALDO
CALDO
L890
ELF18D486D
F801
S5055AC
R891
3.3M
1/2W
C898
0.22u
AC250V
C899
0.22u
AC250V
L891
ELF18D486D
S840
ESB92511B
G4
D20
G3
BLUE
BROWN
AC CORD

SCHEMA-HA

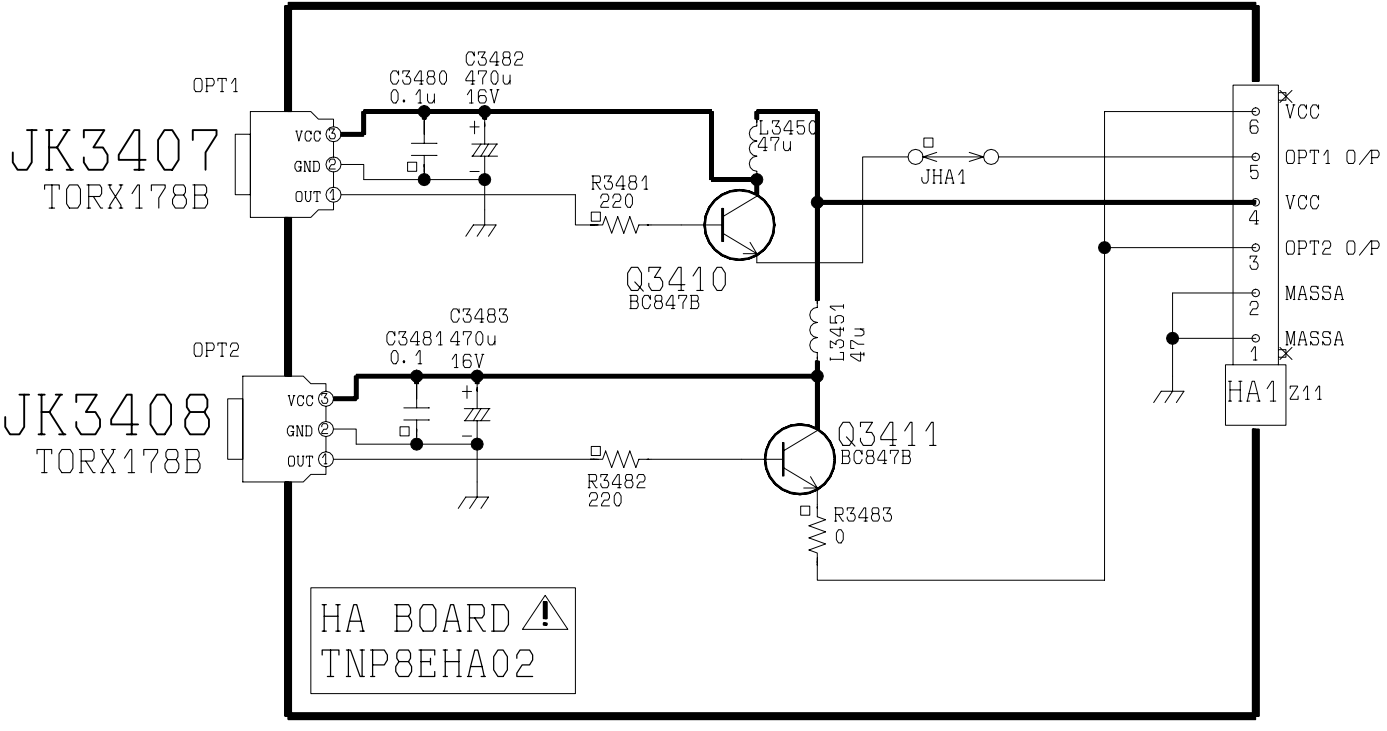
OPT1
JK3407
TORX178B
VCC
GND
OUT
C3480
0.1u
C3482
470u
16V
R3481
220
L3450
47u
Q3410
BC847B
JHA1
OPT2
JK3408
TORX178B
C3481
0.1
C3483
470u
16V
R3482
220
L3451
47u
Q3411
BC847B
R3483
0
HA BOARD
TNP8EHA02
VCC
OPT1 O/P
VCC
OPT2 O/P
MASSA
MASSA
HA1
Z11

SCHEMA -H

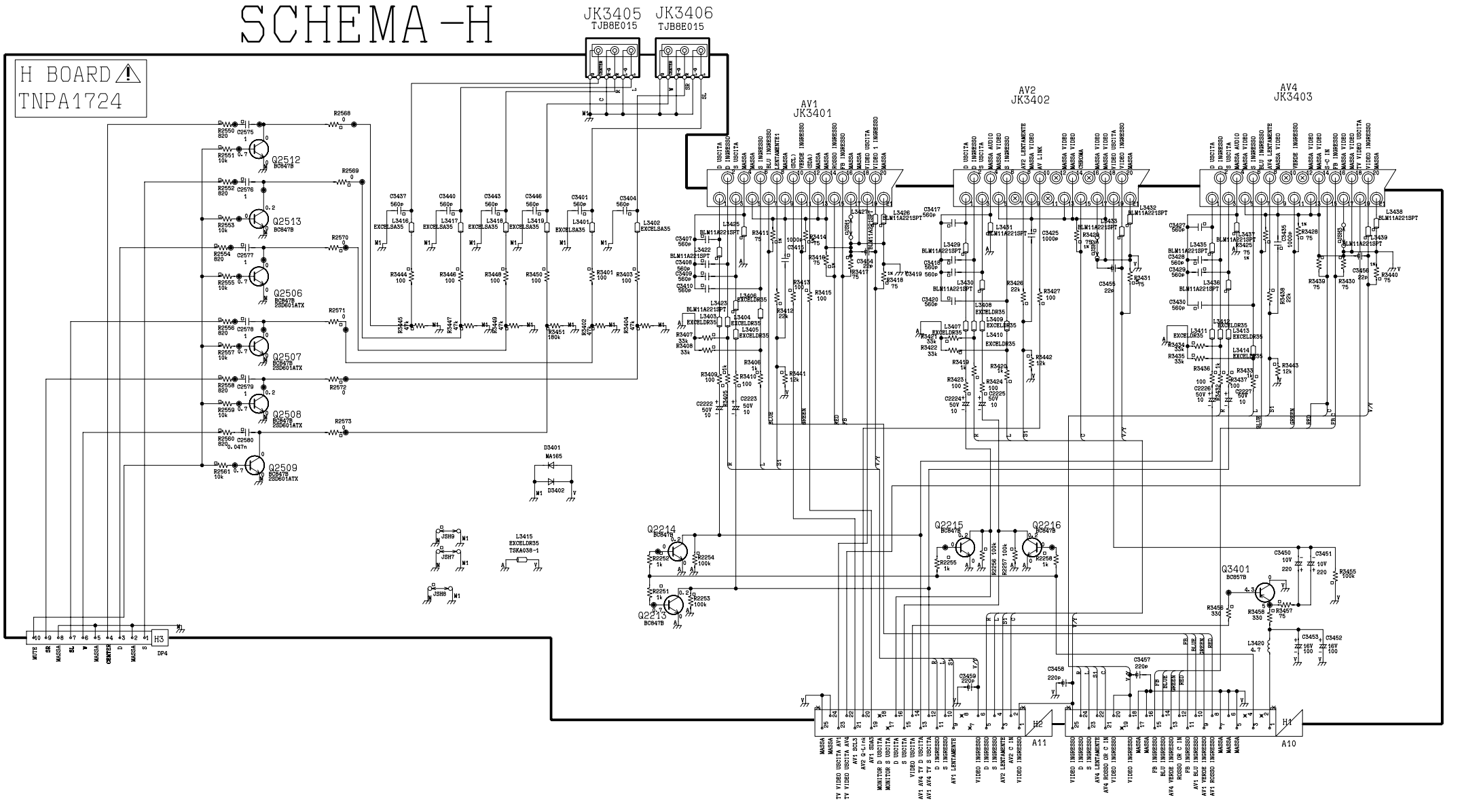
H BOARD
TNPA1724
JK3405
TJB8E015
JK3406
TJB8E015
AV1
JK3401
AV2
JK3402
AV4
JK3403
Q2512
Q2513
Q2506
Q2507
Q2508
Q2509
Q2214
Q2215
Q2216
Q2213
Q3401
D3401
D3402
H3
H2
H1
A11
A10

SCHEMA -D

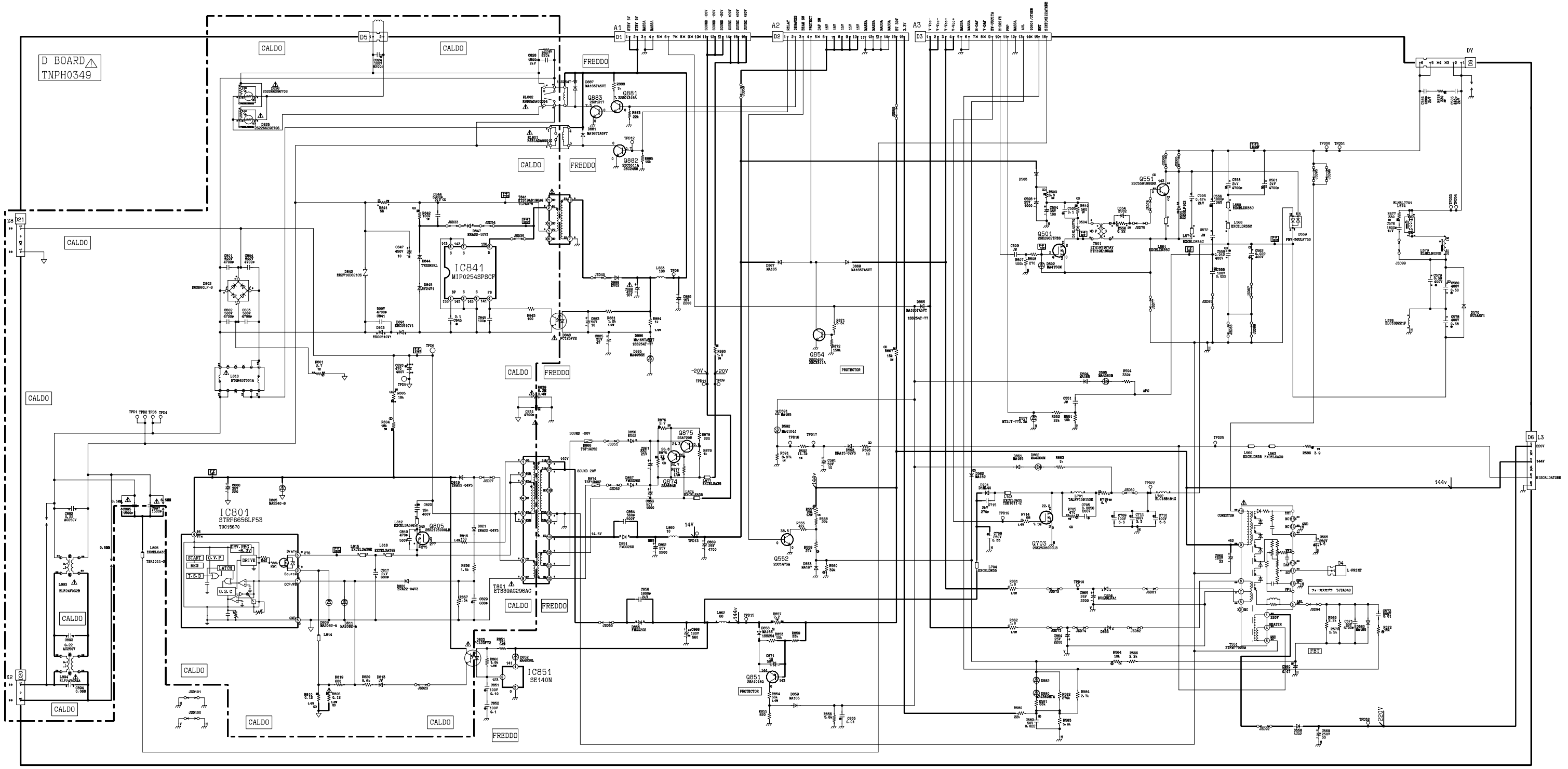
D BOARD
TNPH0349
CALDO
FREDDO
IC841
MIP0254SPSCF
IC801
STRF6656LF53
IC851
SE140N
Q875
Q874
Q881
Q882
Q883
Q501
Q703
Q552
Q851
Q854
Q805
T801
T501
T851
L610
L895
L894
L893
D802
D825
D501
D551
D703
D851
D5
D6
D20
D21
D3
D1
D2
D9
DY
L3
D4
L-P81NT
フォーカスFP TJTA046
FBT
DISCHLDATORE
144v
220V
-20V
20V
14V
14.5V
14.4V
APC
PROTECTOR
START
O.V.P
REG
T.S.D
LATCH
O.S.C
DRIVE
DRV REG
+5.3V
Drain
Source
OCP/FB
GATES
CORRECTION
SOUND -20V
SOUND 20V
SOUND +20V
SOUND +40V
SOUND +60V
MUTE
PROTECT
DAP SW
RELAY
STBY BY
MASSA
B-CAP
Y-CAP
R-CAP
B-CRITE
G-CRITE
R-CRITE
ACL
1080i/CTDEB
EDT
STATUSIZZATORE
B+ 30V
5.3V
T-Foc-
T-Foc+
T-Foc+
T-Foc+
T-Foc+

SCHEMA -L

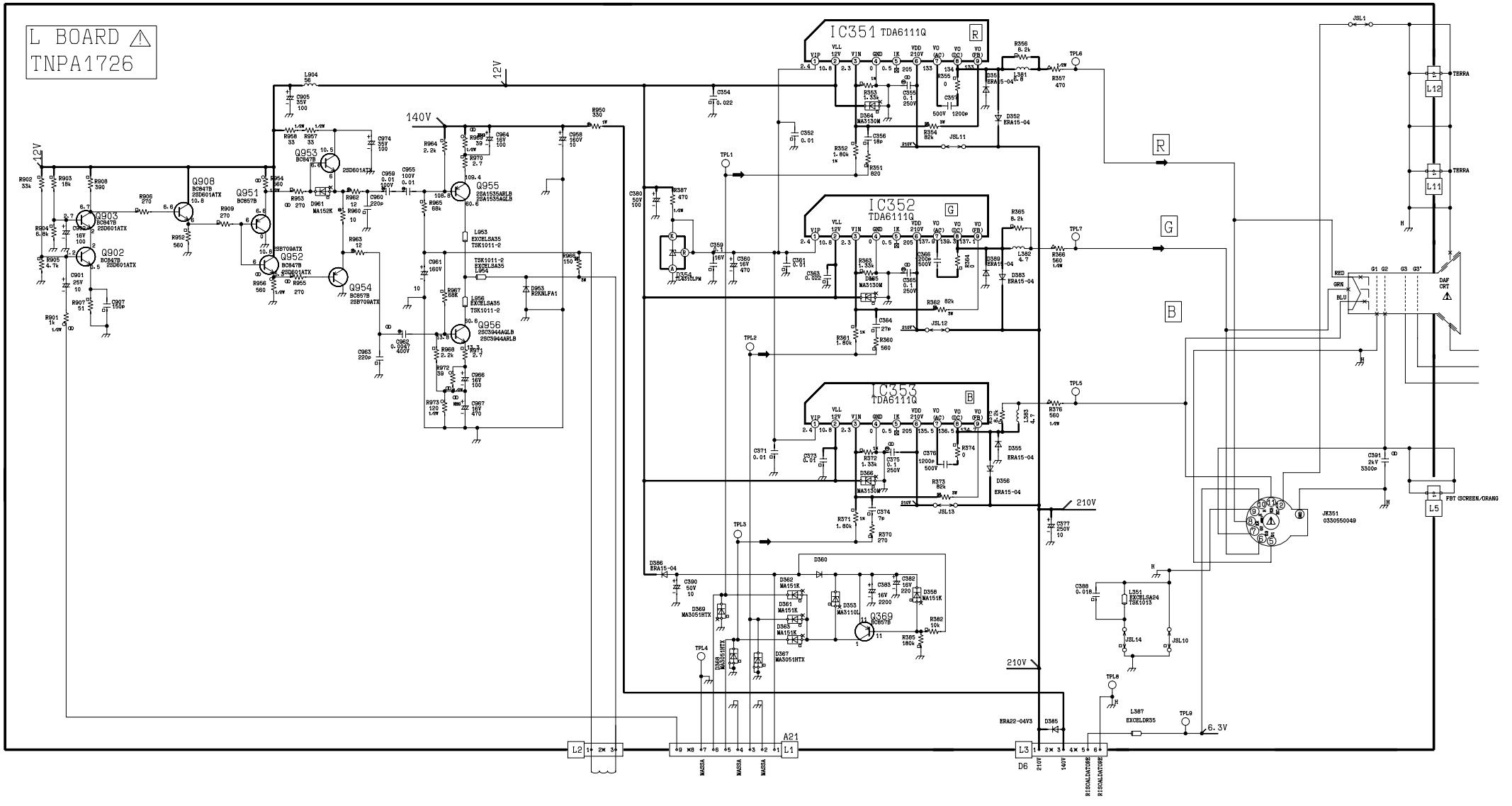
L BOARD
TNPA1726
IC351 TDA6111Q
IC352 TDA6111Q
IC353 TDA6111Q
Q908 BC847B 2SD601ATX
Q951 BC857B
Q903 BC847B 2SD601ATX
Q902 BC847B 2SD601ATX
Q953 BC847B 2SD601ATX
Q952 BC847B 2SD601ATX
Q954 BC857B 2SB709ATX
Q955 2SA1535ALB 2SA1535AGLB
Q956 2SC5944AGLB 2SC5944ABLB
Q369 BC857B
12V
140V
210V
6.3V
R
G
B
TERRA
FBT (SCREEN/ORANG
DAF CRT
JK351 0330550049
MASSA

SCHEMA-Z

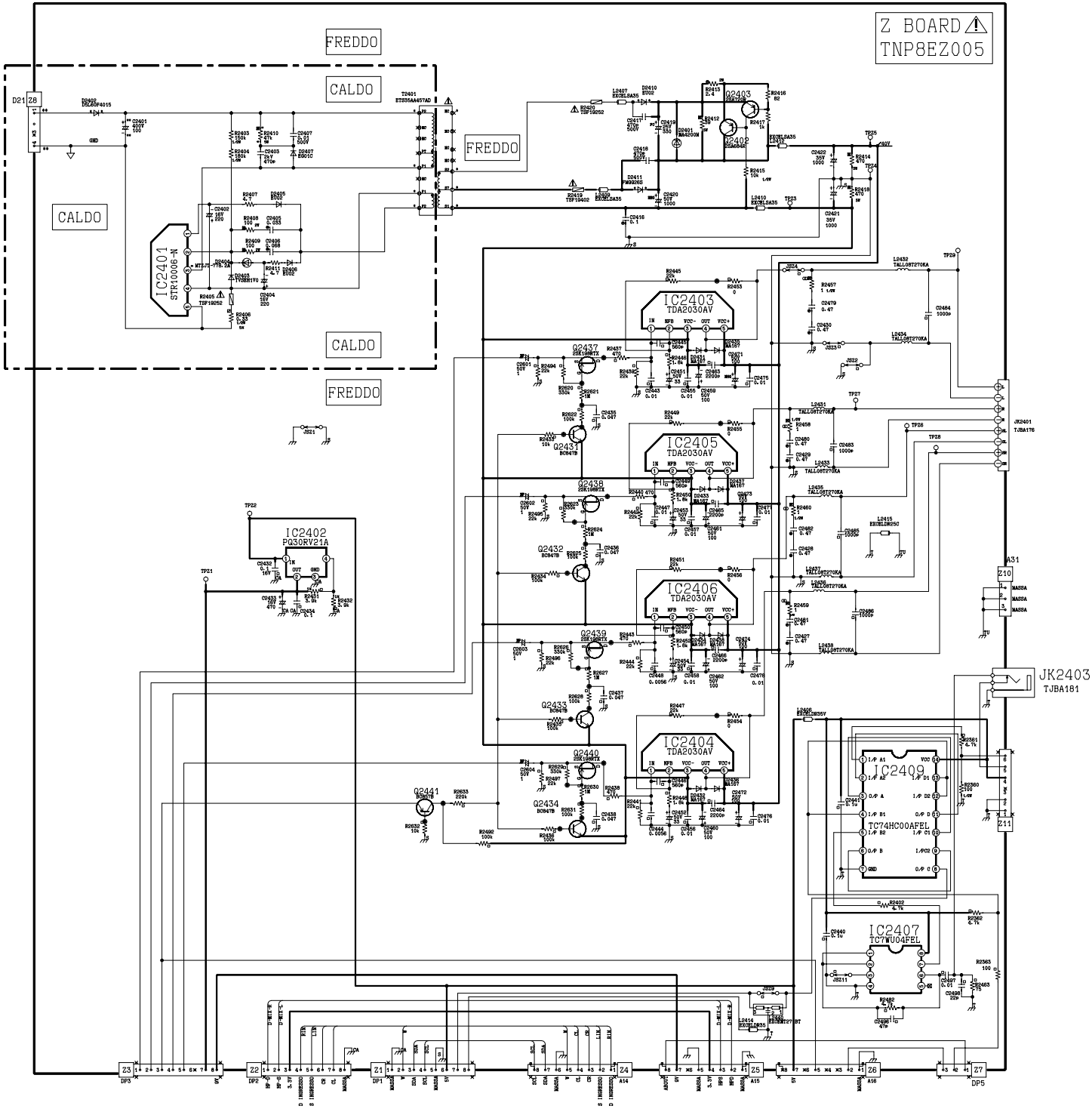
Z BOARD
TNP8EZ005
FREDDO
CALDO
IC2401
STR10006-N
IC2402
PQ30RV21A
IC2403
TDA2030AV
IC2404
TDA2030AV
IC2405
TDA2030AV
IC2406
TDA2030AV
IC2407
TC7WU04FEL
IC2409
TC74HC00AFEL
Q2403
Q2402
Q2437
Q2431
Q2438
Q2432
Q2439
Q2433
Q2440
Q2434
Q2441
JK2401
TJBA176
JK2403
TJBA181
A31
Z10
Z11
MASSA
Z3
Z2
Z1
Z4
Z5
Z6
Z7
DP3
DP2
DP1
DP5
A14
A15
A16

SCHEMA-A

IC1109
PST9116NR
IC1315
AN5594FB
RGB PROCESSOR
IC1107
TC7WBD3245FK
IC1105
IC1104
IC1253
M62362FP70BC
IC3002
TDA8601T/C1
IC3001
CXA2069Q-T1
IC3003
CXA1211M-T4
IC2001
MC68HC908AZ60A
IC2301
TDA7490
IC2302
AN7108
MAIN-HP AMP
IC2303
AN6540NSP-E2
IC2306
AN6540NSP-E2
IC2305
TDA7491
WOOFER or CENTER
IC2307
AN6540NS
IC2051
AN7808LB
IC2707
AN7808LB
IC2708
IC2709
IC2705
IC2706
IC4801
AN6540NS-E1
IC4451
LA7670N
IC459
TC74HC221AF
IC3302
AN7812LB
IC6501
NJM2903M
IC1254
IC1255
IC1108
AN7805
IC2307
AN6540NS
L/R
A BOARD
TNPH0348

SCHEMA-DP

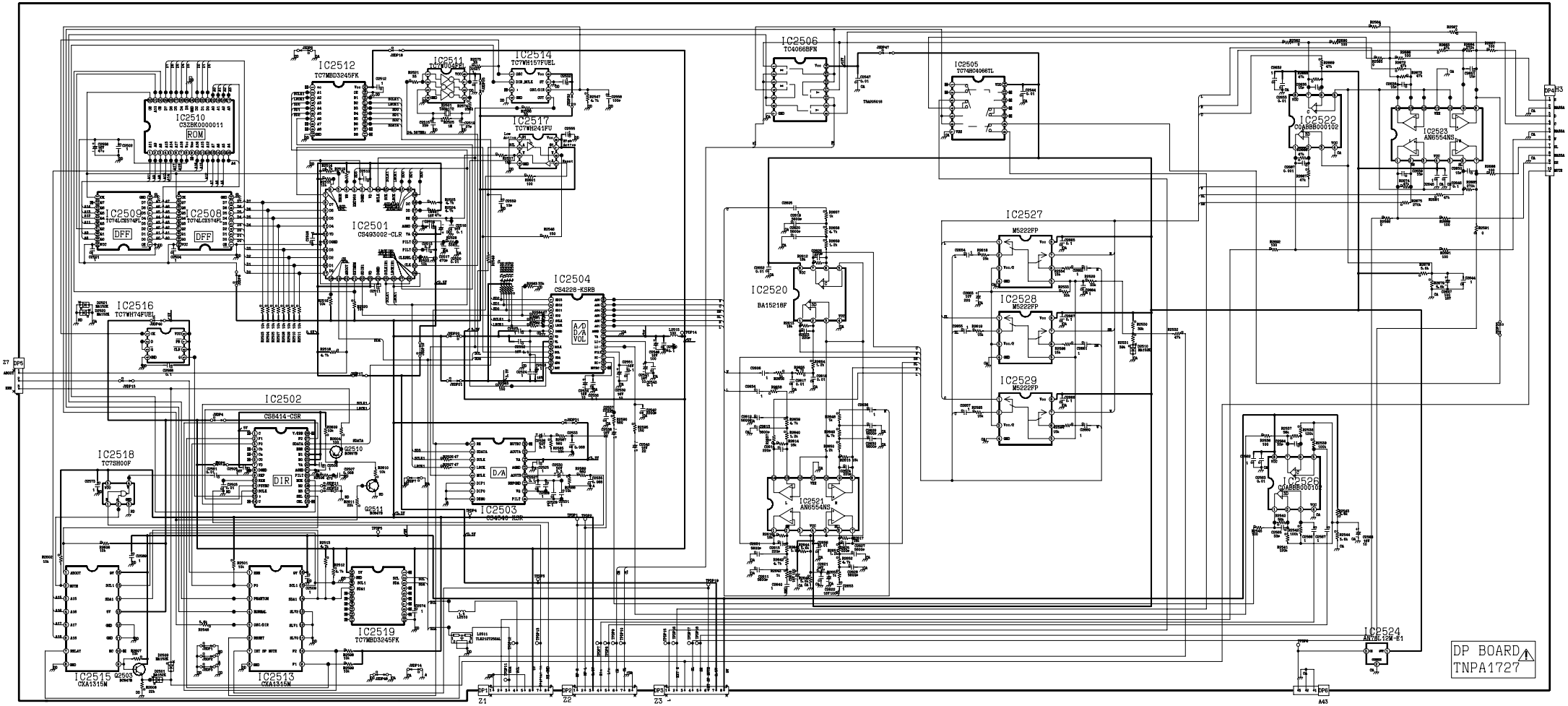
IC2510
C32B0000011
ROM
IC2512
TC7MBD3245FK
IC2511
TC7WH04FU
IC2514
TC7WH157FUEL
IC2517
TC7WH241FU
IC2506
TC4066BFN
IC2505
TC74HC4066TL
IC2522
C0ABBB000102
IC2523
AN6554NS
IC2508
TC74LCX574FU
DFF
IC2509
TC74LCX574FU
DFF
IC2501
CS493002-CLR
IC2504
CS4228-KSRB
A/D
D/A
VOL
IC2527
M5222FP
IC2520
BA15218F
IC2528
M5222FP
IC2529
M5222FP
IC2516
TC7WH74FUEL
IC2502
CS8414-CSR
DIR
IC2518
TC7SH00F
Q2510
Q2511
IC2503
D/A
IC2521
AN6554NS
IC2526
C0ABBB000102
IC2519
TC7MBD3245FK
IC2515
CXA1315N
Q2503
IC2513
CXA1315N
IC2524
AN78L12M-E1
DP BOARD
TNPA1727
Z1
Z2
Z3
A43

SCHEMA-DG

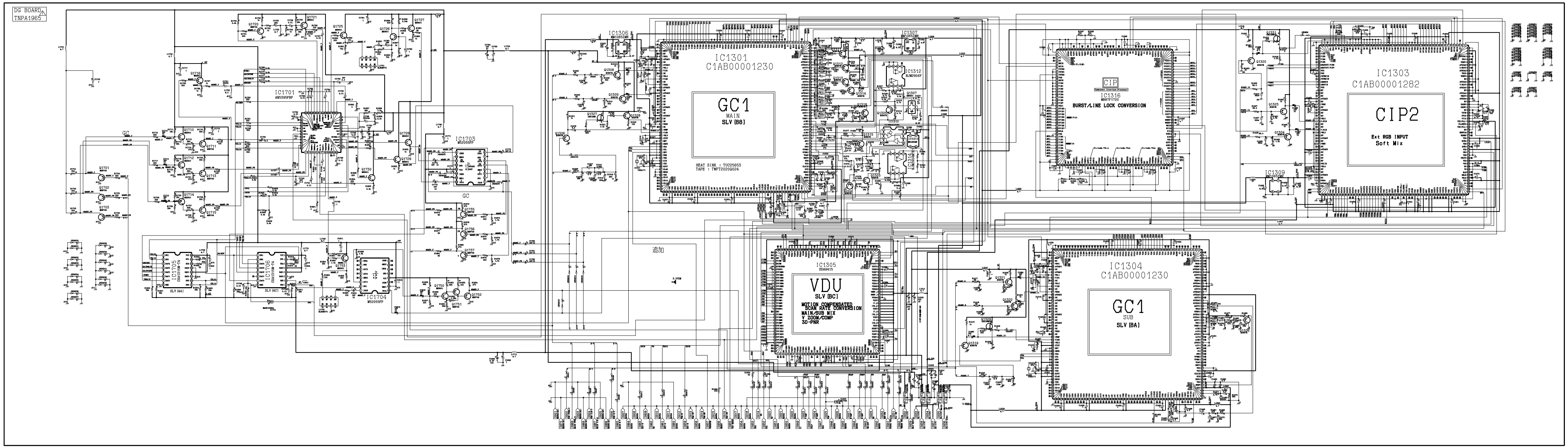
DG BOARD
TNPA1965
IC1301
C1AB00001230
GC1
MAIN
SLV [B8]
HEAT SINK : T0CS5653
TAPE : TWP2020204
IC1302
IC1306
IC1312
IC1316
CIP
BURST/LINE LOCK CONVERSION
IC1303
C1AB00001282
CIP2
Ext RGB INPUT
Soft Mix
IC1309
IC1701
IC1703
IC1704
IC1705
IC1706
GC
追加
IC1305
VDU
SLV [BC]
MOTION COMPENSATED
SCAN RATE CONVERSION
MAIN/SUB MIX
V ZOOM/COMP
3D-PNR
IC1304
C1AB00001230
GC1
SUB
SLV [BA]

SCHEMA-U

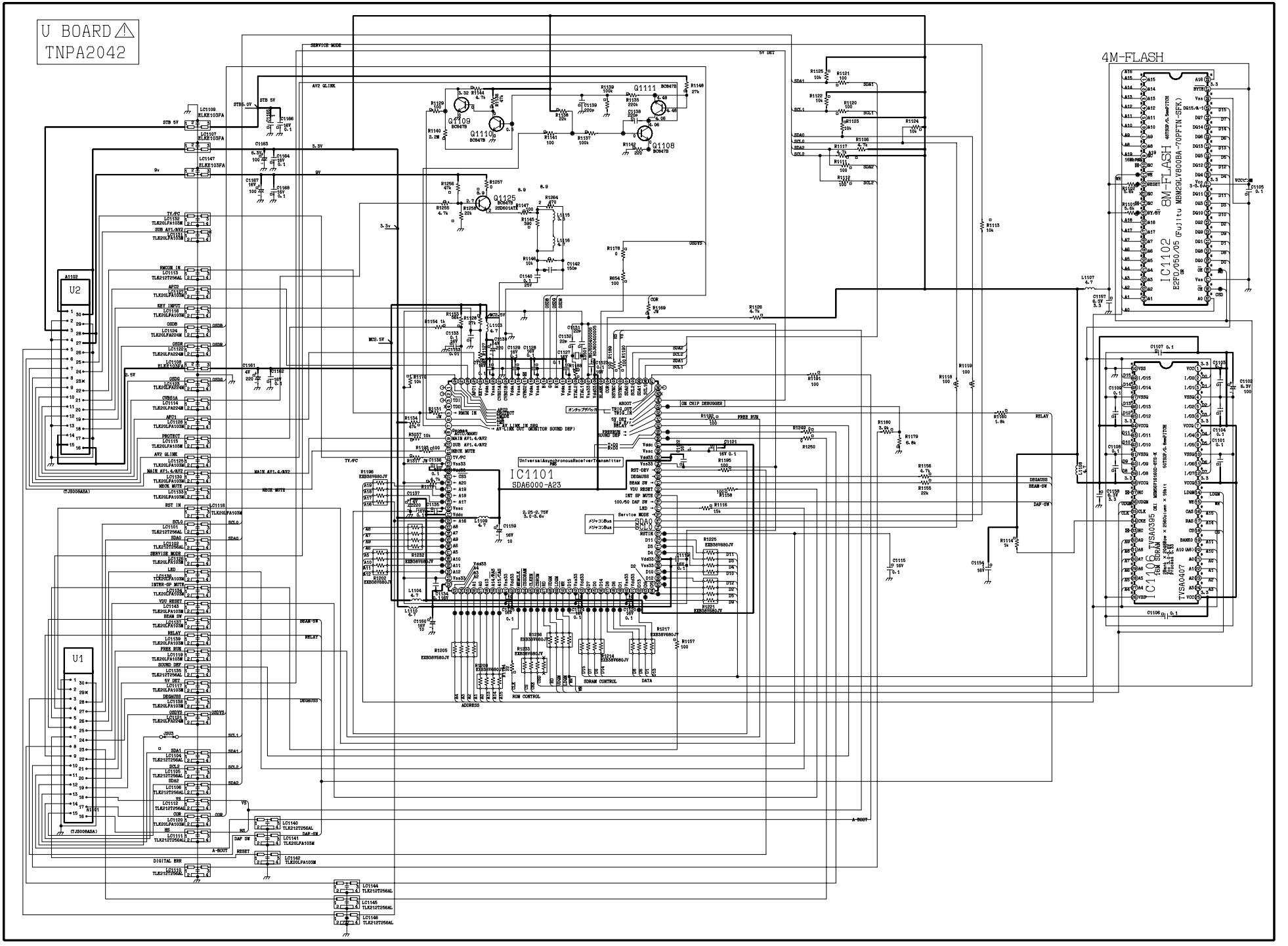
U BOARD
TNPA2042
IC1101
SDA6000-A23
IC1102
4M-FLASH
IC1401
TVSA0407
U1
U2
Q1108
Q1109
Q1110
Q1111
Q1125
SERVICE MODE
ON CHIP DEBUGGER
FREE RUN
SDRAM CONTROL
ROM CONTROL
ADDRESS
DATA

REPLACEMENT PARTS LIST

Important Safety Notice

Components Identified by ⚠ mark have special characteristics important for safety.
* When replacing any of these components, use only manufacturers specified parts.
In case of ordering these spare parts, please always add the complete Model-Type number to your order.

Cct Ref	Parts Number	Description	
EXPLODED VIEW			
1	A68ELO10X71	C.R.T.	⚠
2	EAB10108B2	SPEAKER	
3	EABG12506A2	SPEAKER	
4	ENG29507G	TUNER	⚠
5	ENG29C01G	TUNER	⚠
6	EUR511224	REMOTE CONTROL	
7	TBMA060	PANASONIC BADGE	
8	TBX8E089	POWER BUTTON	
9	THT1062	CRT FIXING SCREW	
10	TKP8E1401	SPEAKER PANEL LEFT	
11	TKP8E1406	SPK PANEL RIGHT	
12	TKP8E1421-1	RIGHT HAND PANEL	
13	TKP8E1430	DOOR LID	
14	TKU8E00690	REAR COVER	
15	TKY8E570-1	CABINET	⚠
16	TMW8E045	CONTROL BRACKET	
17	TMX8E050	CHASSIS FRAME	
18	TNP8EG004AA	G P.C.B.	⚠
19	TNP8EH002AA	H P.C.B.	⚠
20	TNP8EZ005AA	Z P.C.B.	⚠
21	TNPA1724	H P.C.B.	⚠
22	TNPA1726AC	L P.C.B.	⚠
23	TNPA1727AG	DP P.C.B.	⚠
24	TNPA1965AE	DG P.C.B.	⚠
25	TNPA2042AS	U P.C.B.	⚠
26	TNPH0348BU	A P.C.B.	⚠
27	TNPH0349BD	D P.C.B.	⚠
28	TQF8E3206-1	MODEL LABEL	⚠
29	TXASX01CRZG	AC CORD	⚠
30	TXFLK01CQYG	DEGAUSS COIL	⚠
31	TXJ/E50CQKG	SPEAKER WIRE	
32	TXJF0C0CJFG	FOCUS LEAD ASSEMBLY	⚠
33	UR51EC904A	BATTERY COVER (REMOTE)	
34	ZTBZAD550A	ANODE CABLE	⚠
35	ZTFM77020A	FBT	⚠
SK401	XTV3+12A	SCREW CRT FIXING	
SK402	XTV3+12A	SCREW CRT FIXING	
SK403	XTV3+12A	SCREW CRT FIXING	
SK404	XTV3+12A	SCREW CRT FIXING	
I.C.s			
D354	TL431CLPM	REGULATOR	
IC051	AN7805FLB	5V REGULATOR	
IC351	TDA6111Q-N4	RGB OUTPUT	
IC352	TDA6111Q-N4	RGB OUTPUT	
IC353	TDA6111Q-N4	RGB OUTPUT	
IC451	LA7845N	VERTICAL OUTPUT	
IC459	TC74HC221AF	MULTIVIBRATOR	
IC501	NJM2903MTE1	AUDIO AMPLIFIER	
IC801	STRF6656LF53	POWER SUPPLY	
IC841	MIP0254SPSCF	POWER SUPPLY SWITCHING	

Cct Ref	Parts Number	Description
IC851	SE140N	ERROR AMPLIFIER
IC1101	SDA6000-A23	MICRO PROCESSOR
IC1102	E2F6/010/05	ICV 3
IC1104	X24BR200-2OD	IC EAROM *
IC1105	S-80843ALY-Z	5V REGULATOR
IC1106	TVSA0500	SDRAM
IC1107	TC7MBD3245FK	CONVERTER
IC1108	AN78L05TA	5V REGULATOR
IC1109	PST9119NR	SYSTEM RESET
IC1251	SI-3033C	3.5V REGULATOR
IC1252	PQ30RV21B	2.5V REGULATOR
IC1253	M62392FP70BC	D/A CONVERTER
IC1254	PST9128NR	RESET
IC1301	C1AB00001468	VIDEO PROCESSOR
IC1303	C1AB00001282	VIDEO PROCESSOR
IC1304	C1AB00001230	VIDEO PROCESSOR
IC1305	SDA9415	SCAN RATE CONVERTOR
IC1306	MM1065ZMR	3.3V REGULATOR
IC1307	MM1065ZMR	3.3V REGULATOR
IC1309	MM1065ZMR	3.3V REGULATOR
IC1310	TC7WH241FUEL	VIDEO PROCESSOR
IC1311	MM1065ZMR	3.3V REGULATOR
IC1312	NJM2904VTE1	AUDIO AMPLIFIER
IC1314	NJM2904MTE1	AUDIO AMPLIFIER
IC1315	AN5394FB	R.G.B. PROCESSOR
IC1316	MB87F1720	CIP
IC2001	MSP3410DQAC5	M.S.P.
IC2301	TDA7490	AUDIO AMPLIFIER
IC2302	AN7108	H.P. AMPLIFIER
IC2303	NJM2059MTE1	QUAD AMPLIFIER
IC2305	TDA7481	AUDIO AMPLIFIER
IC2306	NJM2059MTE1	QUAD AMPLIFIER
IC2307	NJM2059MTE1	QUAD AMPLIFIER
IC2401	STR10006-N	POWER SUPPLY
IC2402	PQ30RV21B	2.5V REGULATOR
IC2403	TDA2030AV	AUDIO AMPLIFIER
IC2404	TDA2030AV	AUDIO AMPLIFIER
IC2405	TDA2030AV	AUDIO AMPLIFIER
IC2406	TDA2030AV	AUDIO AMPLIFIER
IC2407	TC7WU04FEL	BUFFER
IC2409	TC74HC00AFEL	VIDEO IC
IC2501	CS493002-CLR	IC
IC2502	CS8414-CSR	IC
IC2503	CS4340-KSR	IC
IC2504	CS4228-KSRB	IC
IC2505	TC74HC4066TL	IC
IC2506	TC74HC4066TL	IC
IC2508	TC74LCX574FL	I.C.
IC2509	TC74LCX574FL	I.C.
IC2510	C3ZBK0000011	IC DOLB
IC2511	TC7WU04FEL	BUFFER
IC2512	TC7MBD3245FK	CONVERTER
IC2513	CXA1315M-T4	IC

Cct Ref	Parts Number	Description
IC2515	CXA1315M-T4	IC
IC2516	TC7WH74FUEL	I.C.TOSHBA T7WH4FU(T
IC2517	TC7WH241FUEL	VIDEO PROCESSOR
IC2518	TC7SH00FEL	I.C.
IC2519	TC7MBD3245FK	CONVERTER
IC2520	BA15218F-E2	AMPLIFIER
IC2521	AN6554NSF-E2	OPERATIONAL AMPLIFIER
IC2522	C0ABBB000102	ICM2115M
IC2523	AN6554NSF-E2	OPERATIONAL AMPLIFIER
IC2524	AN78L12M-E1	IC
IC2526	C0ABBB000102	ICM2115M
IC2527	M5222FP-E2	IC
IC2528	M5222FP-E2	IC
IC2529	M5222FP-E2	IC
IC2705	PQ1CG21H2RZ	REGULATOR
IC2706	PQ1CG21H2RZ	REGULATOR
IC2707	AN7808LB	8V REGULATOR
IC2708	SI-8090K	POWER SUPPLY
IC2709	PQ1CG21H2RZ	REGULATOR
IC3001	CXA2069Q-TL	SWITCHING
IC3002	TDA8601T/C1	12V REGULATOR
IC3003	CXA1211M-T4	VIDEO AMPLIFIER
IC3302	L78M12MRB	12V REGULATOR
IC4801	AN6564NS-E1	OPERATIONAL AMPLIFIER
IC4802	PUB4301	GEOMAGNETIC CORRECTION
RM1001	RPM6937	LED RECEIVER
FUSES		
F801-1	EYF52BC	FUSE HOLDER
F801-2	EYF52BC	FUSE HOLDER
F801	XBA2C50TH15	FUSE ⚠
DIODES		
D001	MA4020	DIODE
D002	MA4020	DIODE
D003	MA3150HTX	DIODE
D004	MA3150HTX	DIODE
D010	MA152KTX	DIODE
D051	MA4020	DIODE
D052	MA4020	DIODE
D053	MA152KTX	DIODE
D351	ERA15-04V3	DIODE
D352	ERA15-04V3	DIODE
D353	MA3110LTX	DIODE
D355	ERA15-04V3	DIODE
D356	ERA15-04V3	DIODE
D358	MA151ATX	DIODE
D360	ERA15-02V3	DIODE
D361	MA151ATX	DIODE
D362	MA151ATX	DIODE
D363	MA151ATX	DIODE
D364	MA3130MTX	DIODE
D365	MA3130MTX	DIODE
D366	MA3130MTX	DIODE
D367	MA3051HTX	DIODE
D368	MA3051HTX	DIODE
D369	MA3051HTX	DIODE
D383	ERA15-04V3	DIODE
D385	ERA22-04V3	DIODE
D386	ERA15-04V3	DIODE
D389	ERA15-04V3	DIODE
D452	MA152KTX	DIODE
D453	EU02AV1	DIODE
D454	MA152KTX	DIODE
D455	MA152KTX	DIODE
D456	ERA22-02V3	DIODE
D465	MA3039HTX	DIODE
D502	MA4150TA	DIODE

Cct Ref	Parts Number	Description
D503	ERA81004V3	DIODE
D504	D1NL40V70	DIODE
D553	MA167TA5	DIODE
D554	EU02	DIODE
D555	RH3GLF102	DIODE
D557	MA1033MTA	DIODE
D558	AU02V0	DIODE
D559	FMV-3GULF730	DIODE
D560	MA165TA5	DIODE
D562	MA182TA	DIODE
D570	RU3ANV1	DIODE
D580	MA4360	DIODE
D591	MA165TA5	DIODE
D592	MA4104	DIODE
D593	ERA15-02V3	DIODE
D594	MA165TA5	DIODE
D595	MA4360MTA	DIODE
D701	D1NL40V70	DIODE
D802	D6SB80LF-B	DIODE
D805	MA2240-BLFS	DIODE
D809	MA2082-ALFS	DIODE
D811	MA2082-ALFS	DIODE
D819	ERA22-04V3	DIODE
D820	ERA22-04V3	DIODE
D821	ERA22-04V3	DIODE
D823	PC123FY2	DIODE ⚠
D825	232266296706	THERMISTOR ⚠
D826	232266296706	THERMISTOR ⚠
D843	ERC0510V1	DIODE
D844	TVSSR2KL	DIODE
D845	RY24V1	DIODE
D847	ERA22-10	DIODE
D848	PC123FY2	DIODE ⚠
D851	FMGG26S	DIODE
D852	MA4030LTA	DIODE
D853	RU2AMLFA1	DIODE
D854	RU2AMLFA1	DIODE
D855	FMGG2CS	DIODE
D856	EU02	DIODE
D857	FMGG26S	DIODE
D858	MA165TA5	DIODE
D859	MA165TA5	DIODE
D861	MA165TA5	DIODE
D862	MA4360MTA	DIODE
D865	MA165TA5	DIODE
D867	MA165TA5	DIODE
D869	MA165TA5	DIODE
D881	MA165TA5	DIODE
D885	MA4056HTA	DIODE
D886	MA165TA5	DIODE
D887	MA165TA5	DIODE
D888	EU02	DIODE
D891	ERC0510V1	DIODE
D953	R2KNLFA1	DIODE
D961	MA152KTX	DIODE
D1011	LNH201RFCF6	LED
D1012	MTZJT-775.1C	DIODE
D1152	MA152KTX	DIODE
D1153	MA152KTX	DIODE
D1302	MA152KTX	DIODE
D1305	MA704ATX	DIODE
D1306	MA3062MTX	DIODE
D1307	MA3091MTX	DIODE
D1308	MA152KTX	DIODE
D1309	MA152KTX	DIODE
D1310	MA3062MTX	DIODE

Cct Ref	Parts Number	Description
D1311	MA3062MTX	DIODE
D1312	MA3062MTX	DIODE
D1313	MA3043MTX	DIODE
D1315	MA3043MTX	DIODE
D2040	MA152KTX	DIODE
D2041	MA152KTX	DIODE
D2048	MA152KTX	DIODE
D2301	TVSRM26V1	DIODE
D2302	MTZJT-775.6B	DIODE
D2305	MA3047MTX	DIODE
D2306	MA29TA5	DIODE
D2311	MA1180HTA	DIODE
D2312	MA3130MTX	DIODE
D2313	MA152KTX	DIODE
D2314	MA152KTX	DIODE
D2316	MA152KTX	DIODE
D2401	MA4200MTA	DIODE
D2402	D5L60F4015	DIODE
D2403	TVSEH1LF-F7	DIODE
D2404	MTZJT-778.2A	DIODE
D2405	EU02	DIODE
D2406	EU02	DIODE
D2407	EG01CV0	DIODE
D2410	EU02	DIODE
D2411	FMGG26S	DIODE
D2431	MA167TA5	DIODE
D2432	MA167TA5	DIODE
D2433	MA167TA5	DIODE
D2434	MA167TA5	DIODE
D2435	MA167TA5	DIODE
D2436	MA167TA5	DIODE
D2437	MA167TA5	DIODE
D2438	MA167TA5	DIODE
D2501	MA152KTX	DIODE
D2509	MA152KTX	DIODE
D2510	MA152KTX	DIODE
D2520	MA152KTX	DIODE
D2521	MA152KTX	DIODE
D2711	RK34LFC4	DIODE
D2712	AK04V0	DIODE
D2713	RK34LFC4	DIODE
D2714	RK34LFC4	DIODE
D2715	MA29TA5	DIODE
D3003	MA3091LTX	DIODE
D3004	MA3091LTX	DIODE
D3103	MA165TA5	DIODE
D3104	MA165TA5	DIODE
D3401	MA165TA5	DIODE
D3402	MA165TA5	DIODE
TRANSISTORS		
IC2514	TC7WH157FUEL	TRANSISTOR
Q002	BC857B	TRANSISTOR
Q052	BC857B	TRANSISTOR
Q369	BC857B	TRANSISTOR
Q451	BC847B	TRANSISTOR
Q460	BC847B	TRANSISTOR
Q461	BC847B	TRANSISTOR
Q462	BC847B	TRANSISTOR
Q501	2SK2962TPE6	TRANSISTOR
Q551	2SC5591000RK	TRANSISTOR
Q552	2SC1473ATA	TRANSISTOR
Q703	2SK2538000LB	TRANSISTOR
Q805	2SK2123000LB	TRANSISTOR
Q851	2SA1018QTA	TRANSISTOR
Q854	2SC3311ATA	TRANSISTOR
Q874	2SA684R	TRANSISTOR

Cct Ref	Parts Number	Description
Q875	2SA720-RS	TRANSISTOR
Q881	2SC3311ATA	TRANSISTOR
Q882	2SC3311ATA	TRANSISTOR
Q883	2SC1317-TA	TRANSISTOR
Q902	BC847B	TRANSISTOR
Q903	BC847B	TRANSISTOR
Q908	BC847B	TRANSISTOR
Q951	BC857B	TRANSISTOR
Q952	BC847B	TRANSISTOR
Q953	BC847B	TRANSISTOR
Q954	BC857B	TRANSISTOR
Q955	2SA1535ARLB	TRANSISTOR
Q956	2SC3944ARLB	TRANSISTOR
Q1003	2SC3311ATA	TRANSISTOR
Q1107	BC847B	TRANSISTOR
Q1108	BC847B	TRANSISTOR
Q1109	BC847B	TRANSISTOR
Q1110	BC847B	TRANSISTOR
Q1111	BC847B	TRANSISTOR
Q1112	BC847B	TRANSISTOR
Q1113	BC847B	TRANSISTOR
Q1114	BC847B	TRANSISTOR
Q1115	BC847B	TRANSISTOR
Q1121	BC847B	TRANSISTOR
Q1122	BC847B	TRANSISTOR
Q1125	BC847B	TRANSISTOR
Q1301	BC847B	TRANSISTOR
Q1302	BC847B	TRANSISTOR
Q1303	BC847B	TRANSISTOR
Q1305	BC847B	TRANSISTOR
Q1306	BC857B	TRANSISTOR
Q1307	XN5601TX	TRANSISTOR
Q1308	BC857B	TRANSISTOR
Q1309	BC857B	TRANSISTOR
Q1311	BC857B	TRANSISTOR
Q1312	BC857B	TRANSISTOR
Q1313	BC857B	TRANSISTOR
Q1314	BC857B	TRANSISTOR
Q1315	BC857B	TRANSISTOR
Q1316	BC857B	TRANSISTOR
Q1318	BC857B	TRANSISTOR
Q1319	BC857B	TRANSISTOR
Q1320	BC857B	TRANSISTOR
Q1321	BC857B	TRANSISTOR
Q1322	BC857B	TRANSISTOR
Q1323	BC857B	TRANSISTOR
Q1324	BC857B	TRANSISTOR
Q1326	BC857B	TRANSISTOR
Q1327	2SK198RTX	TRANSISTOR
Q1328	BC847B	TRANSISTOR
Q1329	2SK198RTX	TRANSISTOR
Q1331	2SK198RTX	TRANSISTOR
Q1336	BC857B	TRANSISTOR
Q1340	BC847B	TRANSISTOR
Q1342	BC847B	TRANSISTOR
Q2002	BC857B	TRANSISTOR
Q2003	BC857B	TRANSISTOR
Q2004	BC857B	TRANSISTOR
Q2005	BC857B	TRANSISTOR
Q2006	BC847B	TRANSISTOR
Q2007	BC847B	TRANSISTOR
Q2008	BC847B	TRANSISTOR
Q2040	BC847B	TRANSISTOR
Q2041	BC847B	TRANSISTOR
Q2042	BC847B	TRANSISTOR
Q2043	BC847B	TRANSISTOR

Cct Ref	Parts Number	Description	
Q2213	BC847B	TRANSISTOR	
Q2214	BC847B	TRANSISTOR	
Q2215	BC847B	TRANSISTOR	
Q2216	BC847B	TRANSISTOR	
Q2301	BC847B	TRANSISTOR	
Q2302	BC847B	TRANSISTOR	
Q2303	BC847B	TRANSISTOR	
Q2307	BC847B	TRANSISTOR	
Q2308	BC857B	TRANSISTOR	
Q2309	BC847B	TRANSISTOR	
Q2310	BC847B	TRANSISTOR	
Q2311	BC847B	TRANSISTOR	
Q2402	2SA684R	TRANSISTOR	
Q2403	2SA720-RS	TRANSISTOR	
Q2431	BC847B	TRANSISTOR	
Q2432	BC847B	TRANSISTOR	
Q2433	BC847B	TRANSISTOR	
Q2434	BC847B	TRANSISTOR	
Q2437	2SK198RTX	TRANSISTOR	
Q2438	2SK198RTX	TRANSISTOR	
Q2439	2SK198RTX	TRANSISTOR	
Q2440	2SK198RTX	TRANSISTOR	
Q2441	BC857B	TRANSISTOR	
Q2503	BC847B	TRANSISTOR	
Q2506	BC847B	TRANSISTOR	
Q2507	BC847B	TRANSISTOR	
Q2508	BC847B	TRANSISTOR	
Q2509	BC847B	TRANSISTOR	
Q2510	BC857B	TRANSISTOR	
Q2511	BC847B	TRANSISTOR	
Q2512	BC847B	TRANSISTOR	
Q2513	BC847B	TRANSISTOR	
Q3001	BC847B	TRANSISTOR	
Q3002	BC847B	TRANSISTOR	
Q3006	BC857B	TRANSISTOR	
Q3007	BC847B	TRANSISTOR	
Q3011	BC847B	TRANSISTOR	
Q3071	BC847B	TRANSISTOR	
Q3072	BC847B	TRANSISTOR	
Q3130	BC847B	TRANSISTOR	
Q3131	BC857B	TRANSISTOR	
Q3132	BC847B	TRANSISTOR	
Q3401	BC857B	TRANSISTOR	
Q3410	BC847B	TRANSISTOR	
Q3411	BC847B	TRANSISTOR	
Q3807	BC847B	TRANSISTOR	
Q3808	BC847B	TRANSISTOR	
TRANSFORMERS			
L810	ETQR45T001A	TRANSFORMER	⚠
T501	ETH19Y187AY	TRANSFORMER	⚠
T801	ETS39AG296AC	TRANSFORMER	⚠
T841	ETS19AB1G6AG	TRANSFORMER	⚠
T2401	ETS35AA457AD	TRANSFORMER	⚠
COILS			
L002	ELESN2R2KA	COIL	
L003	ELESN2R2KA	COIL	
L004	EXCELDR35V	COIL	
L008	EXCELDR35V	COIL	
L009	EXCELDR35V	COIL	
L053	EXCELDR35V	COIL	
L055	ELESN2R2KA	COIL	
L056	ELESN2R2KA	COIL	
L351	EXCELSA24T	COIL	
L381	ELESN6R8JA	COIL	
L382	ELESN4R7KA	COIL	
L383	ELESN4R7KA	COIL	

Cct Ref	Parts Number	Description	
L387	EXCELDR35V	COIL	
L559	EXCELDR35C	COIL	
L560	EXCELDR35V	COIL	
L561	EXCELDR35C	COIL	
L563	EXCELSA39V	COIL	
L568	EXCELDR35C	COIL	
L571	EXCELDR35C	COIL	
L574	ELH5L7701	LINEARITY COIL	
L576	ELC18B221F	COIL	⚠
L579	ELHKLB025B	COIL	
L701	TALFP15B152K	COIL	
L702	ELC18B181E	COIL	
L703	EXCELSA35T	COIL	
L704	EXCELDR35V	COIL	
L812	EXCELSA39V	COIL	
L815	EXCELSA39V	COIL	
L818	EXCELSA39V	COIL	
L860	TALL08T100KA	COIL	
L862	TALL08T680KA	COIL	
L874	EXCELSA35T	COIL	
L877	EXCELSA35T	COIL	
L883	TALL08T181KA	COIL	
L890	ELF18D486D	COIL	
L891	ELF18D486D	COIL	
L895	EXCELSA35T	COIL	
L904	TLT560K991R	COIL	
L953	EXCELSA35T	COIL	
L954	EXCELSA35T	COIL	
L956	EXCELSA35T	COIL	
L1103	TALC325T4R7M	COIL	
L1104	TALC325T4R7M	COIL	
L1106	ELESN4R7KA	COIL	
L1107	TALC325T4R7M	COIL	
L1108	TALC325T4R7M	COIL	
L1109	TALC325T4R7M	COIL	
L1110	TALC325T4R7M	COIL	
L1112	EXCELDR35V	COIL	
L1115	TALC325T3R3M	COIL	
L1116	TALC325T4R7M	COIL	
L1300	TALC325T4R7M	COIL	
L1303	TALC168T2R2K	COIL	
L1304	TALC325T4R7M	COIL	
L1305	TALC168T3R3K	COIL	
L1306	TALC325T4R7M	COIL	
L1308	TALC325T100K	COIL	
L1309	TALC325T4R7M	COIL	
L1310	TALC325T4R7M	COIL	
L1311	TALC325T4R7M	COIL	
L1312	EXCELDR35V	COIL	
L1313	TALC325T4R7M	COIL	
L1314	TALC325T4R7M	COIL	
L1315	TALC325T4R7M	COIL	
L1316	TALC325T4R7M	COIL	
L1317	TALC168T6R8K	COIL	
L1318	TALC325T4R7M	COIL	
L1319	TALC325T4R7M	COIL	
L1320	TALC325T100K	COIL	
L1321	TALC325T4R7M	COIL	
L1322	EXCELDR35V	COIL	
L1323	TALC325T4R7M	COIL	
L1324	TALC325T4R7M	COIL	
L1328	TALC325T4R7M	COIL	
L1330	TALC325T4R7M	COIL	
L2001	EXCELDR35V	COIL	
L2002	EXCELDR35V	COIL	
L2004	TLT068K991R	COIL	

Cct Ref	Parts Number	Description	
L2005	EXCELDR35V	COIL	
L2007	EXCELDR35V	COIL	
L2008	EXCELDR35V	COIL	
L2009	TALC325T4R7M	COIL	
L2010	TALC325T4R7M	COIL	
L2278	EXCELSA35T	COIL	
L2301	TALL08T100KA	COIL	
L2302	TALL08T100KA	COIL	
L2303	TAL10RP390LB	COIL	⚠
L2305	TAL10RP390LB	COIL	⚠
L2308	TALL08T270KA	COIL	
L2309	TAL10RP390LB	COIL	⚠
L2311	ELESN101KA	COIL	
L2312	TALL08T100KA	COIL	
L2313	TALL08T100KA	COIL	
L2314	EXCELDR35V	COIL	
L2316	EXCELDR35V	COIL	
L2319	EXCELDR35V	COIL	
L2320	EXCELDR35V	COIL	
L2321	EXCELDR35V	COIL	
L2322	EXCELDR35V	COIL	
L2323	EXCELDR35V	COIL	
L2324	EXCELDR35V	COIL	
L2325	EXCELDR35V	COIL	
L2406	EXCELDR35V	COIL	
L2407	EXCELSA35T	COIL	
L2409	EXCELSA35T	COIL	
L2410	EXCELSA35T	COIL	
L2412	EXCELSA35T	COIL	
L2414	EXCELDR35V	COIL	
L2431	TALL08T270KA	COIL	
L2432	TALL08T270KA	COIL	
L2433	TALL08T270KA	COIL	
L2434	TALL08T270KA	COIL	
L2435	TALL08T270KA	COIL	
L2436	TALL08T270KA	COIL	
L2437	TALL08T270KA	COIL	
L2438	TALL08T270KA	COIL	
L2440	EXCEMT271BT	COIL	
L2445	EXCELDR35V	COIL	
L2510	TALC325T1R5M	COIL	
L2511	TLK212T256AL	COIL	
L2515	TLTACT101J	COIL	
L2523	ELEBR6R8KA	COIL	
L2524	ELEBR6R8KA	COIL	
L2527	EXCELSA35T	COIL	
L2703	EXCELDR35V	COIL	
L2704	TALL08T330KA	COIL	
L2705	EXCELDR35V	COIL	
L2706	TAL10RP151LB	COIL	
L2707	EXCELDR35V	COIL	
L2708	EXCELDR35V	COIL	
L2709	TLPF095	COIL	
L2710	EXCELDR35V	COIL	
L2712	TAL10RP151LB	COIL	
L2713	EXCELDR35V	COIL	
L2714	EXCELDR35V	COIL	
L2715	EXCELDR35V	COIL	
L2716	TALL08T330KA	COIL	
L2717	TALL08T330KA	COIL	
L2718	TLPF095	COIL	
L2719	TLPF095	COIL	
L2722	EXCELDR35V	COIL	
L2724	EXCELDR35V	COIL	
L2725	EXCELDR35V	COIL	
L2727	EXCELDR35V	COIL	

Cct Ref	Parts Number	Description
L2729	EXCELDR35V	COIL
L2730	EXCELDR35V	COIL
L2732	EXCELDR35V	COIL
L2734	EXCELDR35V	COIL
L2735	EXCELDR35V	COIL
L3004	ELESN4R7KA	COIL
L3050	ELESN221KA	COIL
L3401	EXCELSA35T	COIL
L3402	EXCELSA35T	COIL
L3403	EXCELDR35V	COIL
L3404	EXCELDR35V	COIL
L3405	EXCELDR35V	COIL
L3406	EXCELDR35V	COIL
L3407	EXCELDR35V	COIL
L3408	EXCELDR35V	COIL
L3409	EXCELDR35V	COIL
L3410	EXCELDR35V	COIL
L3411	EXCELDR35V	COIL
L3412	EXCELDR35V	COIL
L3413	EXCELDR35V	COIL
L3414	EXCELDR35V	COIL
L3415	EXCELDR35V	COIL
L3416	EXCELSA35T	COIL
L3417	EXCELSA35T	COIL
L3418	EXCELSA35T	COIL
L3419	EXCELSA35T	COIL
L3420	ELESN4R7KA	COIL
L3424	EXCELDR25V	COIL
L3450	TLT470K991R	COIL
L3451	TLT470K991R	COIL
L4801	EXCELDR35V	COIL
L4802	EXCELDR35V	COIL
L4803	EXCELDR35V	COIL
L4804	EXCELDR35V	COIL
LC1101	TLK212T256AL	COIL
LC1102	TLK212T256AL	COIL
LC1104	TLK212T256AL	COIL
LC1105	TLK212T256AL	COIL
LC1106	TLK212T256AL	COIL
LC1110	TLK212T256AL	COIL
LC1111	TLK212T256AL	COIL
LC1112	TLK212T256AL	COIL
LC1113	TLK212T256AL	COIL
LC1114	TLK20LFA224M	COIL
LC1115	TLK20LFA103M	COIL
LC1116	TLK20LFA103M	COIL
LC1117	TLK20LFA103M	COIL
LC1118	TLK20LFA103M	COIL
LC1119	TLK20LFA103M	COIL
LC1120	TLK20LFA103M	COIL
LC1121	TLK20LFA224M	COIL
LC1122	TLK20LFA224M	COIL
LC1123	TLK20LFA224M	COIL
LC1124	TLK20LFA224M	COIL
LC1125	TLK20LFA103M	COIL
LC1126	TLK20LFA103M	COIL
LC1127	TLK20LFA103M	COIL
LC1128	TLK20LFA103M	COIL
LC1130	TLK20LFA103M	COIL
LC1131	TLK20LFA103M	COIL
LC1132	TLK20LFA103M	COIL
LC1133	TLK20LFA103M	COIL
LC1134	TLK20LFA103M	COIL
LC1135	TLK212T256AL	COIL
LC1136	TLK20LFA103M	COIL
LC1137	TLK20LFA103M	COIL

Cct Ref	Parts Number	Description			
LC1138	TLK20LFA103M	COIL			
LC1139	TLK20LFA103M	COIL			
LC1140	TLK212T256AL	COIL			
LC1141	TLK20LFA103M	COIL			
LC1142	TLK20LFA103M	COIL			
LC1143	TLK20LFA103M	COIL			
LC1144	TLK212T256AL	COIL			
LC1145	TLK212T256AL	COIL			
LC1146	TLK212T256AL	COIL			
FILTERS					
L893	ELF24V032B	FILTER			
L894	ELF24V034A	FILTER			
LC1107	ELKE103FA	FILTER			
LC1108	ELKE103FA	FILTER			
LC1109	ELKE103FA	FILTER			
LC1147	ELKE103FA	FILTER			
LC1329	ELKE103FA	FILTER			
LC1330	ELKE103FA	FILTER			
LC1331	ELKE103FA	FILTER			
LC1332	ELKE103FA	FILTER			
LC1333	ELKE103FA	FILTER			
LC1343	QJT1090	EMI FILTER			
LC1344	QJT1090	EMI FILTER			
X101	EFCT6504BF	FILTER			
X102	EFCT7004BF	CERAMIC FILTER			
CRYSTALS					
X1301	TSSA171	CRYSTAL			
X1302	TSSA171	CRYSTAL			
X2101	TSSA128	CRYSTAL			
X2501	TSSA172	CRYSTAL			
X3501	H0J600400006	CRYSTAL			
RESISTORS					
C025	ERJ6GEY0R00	S.M.CARB	0.1W	5%	0 Ω
C572	ERD25TC0T	CARBON	0.25W	5%	0 Ω
D842	ERZV10D621CS	VARISTOR	10W	20%	620 Ω
JA1	ERJ6GEY0R00	S.M.CARB	0.1W	5%	0 Ω
JA2	ERJ6GEY0R00	S.M.CARB	0.1W	5%	0 Ω
JA3	ERJ6GEY0R00	S.M.CARB	0.1W	5%	0 Ω
JA3	ERJ8GEY0R00	S.M.CARB	.125W	5%	0 Ω
JA4	ERJ6GEY0R00	S.M.CARB	0.1W	5%	0 Ω
JA5	ERJ6GEY0R00	S.M.CARB	0.1W	5%	0 Ω
JA6	ERJ6GEY0R00	S.M.CARB	0.1W	5%	0 Ω
JA7	ERJ6GEY0R00	S.M.CARB	0.1W	5%	0 Ω
JA8	ERJ6GEY0R00	S.M.CARB	0.1W	5%	0 Ω
JA9	ERJ6GEY0R00	S.M.CARB	0.1W	5%	0 Ω
JA10	ERJ6GEY0R00	S.M.CARB	0.1W	5%	0 Ω
JA11	ERJ6GEY0R00	S.M.CARB	0.1W	5%	0 Ω
JA12	ERJ6GEY0R00	S.M.CARB	0.1W	5%	0 Ω
JA13	ERJ6GEY0R00	S.M.CARB	0.1W	5%	0 Ω
JA14	ERJ6GEY0R00	S.M.CARB	0.1W	5%	0 Ω
JA15	ERJ6GEY0R00	S.M.CARB	0.1W	5%	0 Ω
JA16	ERJ6GEY0R00	S.M.CARB	0.1W	5%	0 Ω
JA17	ERJ6GEY0R00	S.M.CARB	0.1W	5%	0 Ω
JA18	ERJ6GEY0R00	S.M.CARB	0.1W	5%	0 Ω
JA19	ERJ6GEY0R00	S.M.CARB	0.1W	5%	0 Ω
JA20	ERJ6GEY0R00	S.M.CARB	0.1W	5%	0 Ω
JA21	ERJ6GEY0R00	S.M.CARB	0.1W	5%	0 Ω
JA22	ERJ6GEY0R00	S.M.CARB	0.1W	5%	0 Ω
JA23	ERJ6GEY0R00	S.M.CARB	0.1W	5%	0 Ω
JA24	ERJ6GEY0R00	S.M.CARB	0.1W	5%	0 Ω
JA25	ERJ6GEY0R00	S.M.CARB	0.1W	5%	0 Ω
JA26	ERJ6GEY0R00	S.M.CARB	0.1W	5%	0 Ω
JA27	ERJ6GEY0R00	S.M.CARB	0.1W	5%	0 Ω
JA28	ERJ6GEY0R00	S.M.CARB	0.1W	5%	0 Ω
JA29	ERJ6GEY0R00	S.M.CARB	0.1W	5%	0 Ω

Cct Ref	Parts Number	Description			
JA30	ERJ6GEY0R00	S.M.CARB	0.1W	5%	0 Ω
JA31	ERJ6GEY0R00	S.M.CARB	0.1W	5%	0 Ω
JA32	ERJ6GEY0R00	S.M.CARB	0.1W	5%	0 Ω
JA33	ERJ6GEY0R00	S.M.CARB	0.1W	5%	0 Ω
JA34	ERJ6GEY0R00	S.M.CARB	0.1W	5%	0 Ω
JA35	ERJ6GEY0R00	S.M.CARB	0.1W	5%	0 Ω
JA36	ERJ6GEY0R00	S.M.CARB	0.1W	5%	0 Ω
JA37	ERJ6GEY0R00	S.M.CARB	0.1W	5%	0 Ω
JA38	ERJ6GEY0R00	S.M.CARB	0.1W	5%	0 Ω
JA39	ERJ6GEY0R00	S.M.CARB	0.1W	5%	0 Ω
JA40	ERJ6GEY0R00	S.M.CARB	0.1W	5%	0 Ω
JA41	ERJ6GEY0R00	S.M.CARB	0.1W	5%	0 Ω
JA42	ERJ6GEY0R00	S.M.CARB	0.1W	5%	0 Ω
JA43	ERJ6GEY0R00	S.M.CARB	0.1W	5%	0 Ω
JHA2	ERJ8GEY0R00	S.M.CARB	.125W	5%	0 Ω
JHA3	ERJ8GEY0R00	S.M.CARB	.125W	5%	0 Ω
JSA3	ERJ6GEY0R00	S.M.CARB	0.1W	5%	0 Ω
JSA18	ERJ6GEY0R00	S.M.CARB	0.1W	5%	0 Ω
JSA19	ERJ6GEY0R00	S.M.CARB	0.1W	5%	0 Ω
JSA20	ERJ6GEY0R00	S.M.CARB	0.1W	5%	0 Ω
JSA21	ERJ6GEY0R00	S.M.CARB	0.1W	5%	0 Ω
JSA22	ERJ6GEY0R00	S.M.CARB	0.1W	5%	0 Ω
JSA27	ERJ6GEY0R00	S.M.CARB	0.1W	5%	0 Ω
JSA28	ERJ6GEY0R00	S.M.CARB	0.1W	5%	0 Ω
JSA31	ERJ6GEY0R00	S.M.CARB	0.1W	5%	0 Ω
JSA33	ERJ6GEY0R00	S.M.CARB	0.1W	5%	0 Ω
JSA34	ERJ6GEY0R00	S.M.CARB	0.1W	5%	0 Ω
JSA35	ERJ6GEY0R00	S.M.CARB	0.1W	5%	0 Ω
JSA36	ERJ6GEY0R00	S.M.CARB	0.1W	5%	0 Ω
JSA42	ERJ6GEY0R00	S.M.CARB	0.1W	5%	0 Ω
JSA45	ERJ6GEY0R00	S.M.CARB	0.1W	5%	0 Ω
JSA46	ERJ6GEY0R00	S.M.CARB	0.1W	5%	0 Ω
JSA47	ERJ6GEY0R00	S.M.CARB	0.1W	5%	0 Ω
JSA48	ERJ6GEY0R00	S.M.CARB	0.1W	5%	0 Ω
JSA52	ERJ6GEY0R00	S.M.CARB	0.1W	5%	0 Ω
JSA53	ERJ6GEY0R00	S.M.CARB	0.1W	5%	0 Ω
JSA55	ERJ6GEY0R00	S.M.CARB	0.1W	5%	0 Ω
JSA57	ERJ6GEY0R00	S.M.CARB	0.1W	5%	0 Ω
JSA59	ERJ6GEY0R00	S.M.CARB	0.1W	5%	0 Ω
JSA62	ERJ6GEY0R00	S.M.CARB	0.1W	5%	0 Ω
JSA64	ERJ6GEY0R00	S.M.CARB	0.1W	5%	0 Ω
JSA65	ERJ6GEY0R00	S.M.CARB	0.1W	5%	0 Ω
JSA66	ERJ6GEY0R00	S.M.CARB	0.1W	5%	0 Ω
JSA67	ERJ6GEY0R00	S.M.CARB	0.1W	5%	0 Ω
JSA69	ERJ6GEY0R00	S.M.CARB	0.1W	5%	0 Ω
JSA71	ERJ6GEY0R00	S.M.CARB	0.1W	5%	0 Ω
JSA74	ERJ6GEY0R00	S.M.CARB	0.1W	5%	0 Ω
JSA75	ERJ6GEY0R00	S.M.CARB	0.1W	5%	0 Ω
JSA81	ERJ6GEY0R00	S.M.CARB	0.1W	5%	0 Ω
JSA84	ERJ6GEY0R00	S.M.CARB	0.1W	5%	0 Ω
JSA89	ERJ6GEY0R00	S.M.CARB	0.1W	5%	0 Ω
JSA90	ERJ6GEY0R00	S.M.CARB	0.1W	5%	0 Ω
JSA101	ERJ6GEY0R00	S.M.CARB	0.1W	5%	0 Ω
JSA104	ERD25TC0T	CARBON	0.25W	5%	0 Ω
JSDG1	ERJ6GEY0R00	S.M.CARB	0.1W	5%	0 Ω
JSDG2	ERJ6GEY0R00	S.M.CARB	0.1W	5%	0 Ω
JSDG3	ERJ3GEY0R00	S.M.CARB	0.1W	5%	0 Ω
JSDG4	ERJ3GEY0R00	S.M.CARB	0.1W	5%	0 Ω
JSDG5	ERJ6GEY0R00	S.M.CARB	0.1W	5%	0 Ω
JSDG6	ERJ3GEY0R00	S.M.CARB	0.1W	5%	0 Ω
JSDG7	ERJ6GEY0R00	S.M.CARB	0.1W	5%	0 Ω
JSDG8	ERJ6GEY0R00	S.M.CARB	0.1W	5%	0 Ω
JSDG9	ERJ6GEY0R00	S.M.CARB	0.1W	5%	0 Ω
JSDG11	ERJ6GEY0R00	S.M.CARB	0.1W	5%	0 Ω
JSDG12	ERJ6GEY0R00	S.M.CARB	0.1W	5%	0 Ω
JSDG13	ERJ6GEY0R00	S.M.CARB	0.1W	5%	0 Ω

Cct Ref	Parts Number	Description			
JSDG16	ERJ6GEY0R00	S.M.CARB	0.1W	5%	0 Ω
JSDG17	ERJ6GEY0R00	S.M.CARB	0.1W	5%	0 Ω
JSDG18	ERJ6GEY0R00	S.M.CARB	0.1W	5%	0 Ω
JSDG19	ERJ6GEY0R00	S.M.CARB	0.1W	5%	0 Ω
JSDG20	ERJ6GEY0R00	S.M.CARB	0.1W	5%	0 Ω
JSDG21	ERJ6GEY0R00	S.M.CARB	0.1W	5%	0 Ω
JSDG22	ERJ6GEY0R00	S.M.CARB	0.1W	5%	0 Ω
JSDG23	ERJ6GEY0R00	S.M.CARB	0.1W	5%	0 Ω
JSDG24	ERJ6GEY0R00	S.M.CARB	0.1W	5%	0 Ω
JSDG25	ERJ6GEY0R00	S.M.CARB	0.1W	5%	0 Ω
JSDG26	ERJ6GEY0R00	S.M.CARB	0.1W	5%	0 Ω
JSDG27	ERJ6GEY0R00	S.M.CARB	0.1W	5%	0 Ω
JSDG28	ERJ6GEY0R00	S.M.CARB	0.1W	5%	0 Ω
JSDG29	ERJ6GEY0R00	S.M.CARB	0.1W	5%	0 Ω
JSDG30	ERJ6GEY0R00	S.M.CARB	0.1W	5%	0 Ω
JSDG31	ERJ6GEY0R00	S.M.CARB	0.1W	5%	0 Ω
JSDG32	ERJ6GEY0R00	S.M.CARB	0.1W	5%	0 Ω
JSDG35	ERJ3GEY0R00	S.M.CARB	0.1W	5%	0 Ω
JSDG36	ERJ6GEY0R00	S.M.CARB	0.1W	5%	0 Ω
JSDG55	ERJ3GEY0R00	S.M.CARB	0.1W	5%	0 Ω
JSDG56	ERJ3GEY0R00	S.M.CARB	0.1W	5%	0 Ω
JSDG57	ERJ3GEY0R00	S.M.CARB	0.1W	5%	0 Ω
JSDG58	ERJ3GEY0R00	S.M.CARB	0.1W	5%	0 Ω
JSDG59	ERJ3GEY0R00	S.M.CARB	0.1W	5%	0 Ω
JSDG60	ERJ3GEY0R00	S.M.CARB	0.1W	5%	0 Ω
JSDG61	ERJ3GEY0R00	S.M.CARB	0.1W	5%	0 Ω
JSDG62	ERJ3GEY0R00	S.M.CARB	0.1W	5%	0 Ω
JSDG63	ERJ3GEY0R00	S.M.CARB	0.1W	5%	0 Ω
JSDG64	ERJ3GEY0R00	S.M.CARB	0.1W	5%	0 Ω
JSDG65	ERJ3GEY0R00	S.M.CARB	0.1W	5%	0 Ω
JSDG66	ERJ3GEY0R00	S.M.CARB	0.1W	5%	0 Ω
JSDG67	ERJ3GEY0R00	S.M.CARB	0.1W	5%	0 Ω
JSDG68	ERJ3GEY0R00	S.M.CARB	0.1W	5%	0 Ω
JSDG69	ERJ3GEY0R00	S.M.CARB	0.1W	5%	0 Ω
JSDG70	ERJ3GEY0R00	S.M.CARB	0.1W	5%	0 Ω
JSDG71	ERJ3GEY0R00	S.M.CARB	0.1W	5%	0 Ω
JSDG72	ERJ3GEY0R00	S.M.CARB	0.1W	5%	0 Ω
JSDG73	ERJ3GEY0R00	S.M.CARB	0.1W	5%	0 Ω
JSDG74	ERJ3GEY0R00	S.M.CARB	0.1W	5%	0 Ω
JSDG75	ERJ3GEY0R00	S.M.CARB	0.1W	5%	0 Ω
JSDG76	ERJ3GEY0R00	S.M.CARB	0.1W	5%	0 Ω
JSDG77	ERJ3GEY0R00	S.M.CARB	0.1W	5%	0 Ω
JSDG78	ERJ3GEY0R00	S.M.CARB	0.1W	5%	0 Ω
JSDG79	ERJ3GEY0R00	S.M.CARB	0.1W	5%	0 Ω
JSDG80	ERJ3GEY0R00	S.M.CARB	0.1W	5%	0 Ω
JSDG81	ERJ3GEY0R00	S.M.CARB	0.1W	5%	0 Ω
JSDG82	ERJ3GEY0R00	S.M.CARB	0.1W	5%	0 Ω
JSDG83	ERJ3GEY0R00	S.M.CARB	0.1W	5%	0 Ω
JSDG84	ERJ3GEY0R00	S.M.CARB	0.1W	5%	0 Ω
JSDG85	ERJ3GEY0R00	S.M.CARB	0.1W	5%	0 Ω
JSDG86	ERJ3GEY0R00	S.M.CARB	0.1W	5%	0 Ω
JSDG87	ERJ3GEY0R00	S.M.CARB	0.1W	5%	0 Ω
JSDG88	ERJ3GEY0R00	S.M.CARB	0.1W	5%	0 Ω
JSDG100	ERJ6GEY0R00	S.M.CARB	0.1W	5%	0 Ω
JSDG103	ERJ6GEY0R00	S.M.CARB	0.1W	5%	0 Ω
JSDG104	ERJ3GEY0R00	S.M.CARB	0.1W	5%	0 Ω
JSDG105	ERJ3GEY0R00	S.M.CARB	0.1W	5%	0 Ω
JSDG106	ERJ3GEY0R00	S.M.CARB	0.1W	5%	0 Ω
JSDG107	ERJ3GEY0R00	S.M.CARB	0.1W	5%	0 Ω
JSDG108	ERJ3GEY0R00	S.M.CARB	0.1W	5%	0 Ω
JSDG109	ERJ3GEY0R00	S.M.CARB	0.1W	5%	0 Ω
JSDG110	ERJ3GEY0R00	S.M.CARB	0.1W	5%	0 Ω
JSDG200	ERJ3GEY0R00	S.M.CARB	0.1W	5%	0 Ω
JSDG201	ERJ3GEY0R00	S.M.CARB	0.1W	5%	0 Ω
JSDG202	ERJ3GEY0R00	S.M.CARB	0.1W	5%	0 Ω
JSDG203	ERJ3GEY0R00	S.M.CARB	0.1W	5%	0 Ω

Cct Ref	Parts Number	Description			
JSDG230	ERJ3GEY0R00	S.M.CARB	0.1W	5%	0 Ω
JSDG231	ERJ3GEY0R00	S.M.CARB	0.1W	5%	0 Ω
JSDG232	ERJ3GEY0R00	S.M.CARB	0.1W	5%	0 Ω
JSDG233	ERJ3GEY0R00	S.M.CARB	0.1W	5%	0 Ω
JSDG234	ERJ3GEY0R00	S.M.CARB	0.1W	5%	0 Ω
JSDG235	ERJ3GEY0R00	S.M.CARB	0.1W	5%	0 Ω
JSDG236	ERJ3GEY0R00	S.M.CARB	0.1W	5%	0 Ω
JSDG237	ERJ3GEY0R00	S.M.CARB	0.1W	5%	0 Ω
JSDG238	ERJ3GEY0R00	S.M.CARB	0.1W	5%	0 Ω
JSDG239	ERJ3GEY0R00	S.M.CARB	0.1W	5%	0 Ω
JSDG240	ERJ3GEY0R00	S.M.CARB	0.1W	5%	0 Ω
JSDG241	ERJ3GEY0R00	S.M.CARB	0.1W	5%	0 Ω
JSDG242	ERJ3GEY0R00	S.M.CARB	0.1W	5%	0 Ω
JSDG243	ERJ3GEY0R00	S.M.CARB	0.1W	5%	0 Ω
JSDP1	ERJ6GEY0R00	S.M.CARB	0.1W	5%	0 Ω
JSDP2	ERJ6GEY0R00	S.M.CARB	0.1W	5%	0 Ω
JSDP3	ERJ6GEY0R00	S.M.CARB	0.1W	5%	0 Ω
JSDP4	ERJ6GEY0R00	S.M.CARB	0.1W	5%	0 Ω
JSDP5	ERJ6GEY0R00	S.M.CARB	0.1W	5%	0 Ω
JSDP6	ERJ6GEY0R00	S.M.CARB	0.1W	5%	0 Ω
JSDP7	ERJ6GEY0R00	S.M.CARB	0.1W	5%	0 Ω
JSDP8	ERJ6GEY0R00	S.M.CARB	0.1W	5%	0 Ω
JSDP11	ERJ6GEY0R00	S.M.CARB	0.1W	5%	0 Ω
JSDP12	ERJ6GEY0R00	S.M.CARB	0.1W	5%	0 Ω
JSDP13	ERJ6GEY0R00	S.M.CARB	0.1W	5%	0 Ω
JSDP14	ERJ6GEY0R00	S.M.CARB	0.1W	5%	0 Ω
JSDP17	ERJ6GEY0R00	S.M.CARB	0.1W	5%	0 Ω
JSDP18	ERJ6GEY0R00	S.M.CARB	0.1W	5%	0 Ω
JSDP19	ERJ6GEY0R00	S.M.CARB	0.1W	5%	0 Ω
JSDP20	ERJ6GEY0R00	S.M.CARB	0.1W	5%	0 Ω
JSDP21	ERJ6GEY0R00	S.M.CARB	0.1W	5%	0 Ω
JSDP25	ERJ6GEY0R00	S.M.CARB	0.1W	5%	0 Ω
JSDP31	ERJ6GEY0R00	S.M.CARB	0.1W	5%	0 Ω
JSDP32	ERJ6GEY0R00	S.M.CARB	0.1W	5%	0 Ω
JSDP35	ERJ6GEY0R00	S.M.CARB	0.1W	5%	0 Ω
JSDP40	ERJ6GEY0R00	S.M.CARB	0.1W	5%	0 Ω
JSDP47	ERJ6GEY0R00	S.M.CARB	0.1W	5%	0 Ω
JSDP48	ERJ6GEY0R00	S.M.CARB	0.1W	5%	0 Ω
JSH1	ERJ3GEY0R00	S.M.CARB	0.1W	5%	0 Ω
JSH2	ERJ3GEY0R00	S.M.CARB	0.1W	5%	0 Ω
JSH3	ERJ3GEY0R00	S.M.CARB	0.1W	5%	0 Ω
JSH7	ERJ6GEY0R00	S.M.CARB	0.1W	5%	0 Ω
JSH8	ERJ6GEY0R00	S.M.CARB	0.1W	5%	0 Ω
JSH9	ERJ6GEY0R00	S.M.CARB	0.1W	5%	0 Ω
JSL10	ERJ6GEY0R00	S.M.CARB	0.1W	5%	0 Ω
JSL14	ERJ6GEY0R00	S.M.CARB	0.1W	5%	0 Ω
JSU3	ERJ3GEY0R00	S.M.CARB	0.1W	5%	0 Ω
JSZ2	ERJ6GEY0R00	S.M.CARB	0.1W	5%	0 Ω
JSZ3	ERJ6GEY0R00	S.M.CARB	0.1W	5%	0 Ω
JSZ4	ERJ6GEY0R00	S.M.CARB	0.1W	5%	0 Ω
JSZ7	ERJ6GEY0R00	S.M.CARB	0.1W	5%	0 Ω
JSZ11	ERJ6GEY0R00	S.M.CARB	0.1W	5%	0 Ω
L1101	ERD25TC0T	CARBON	0.25W	5%	0 Ω
L1307	ERD25TC0T	CARBON	0.25W	5%	0 Ω
L2307	ERD25TC0T	CARBON	0.25W	5%	0 Ω
L2315	ERD25TC0T	CARBON	0.25W	5%	0 Ω
L2317	ERD25TC0T	CARBON	0.25W	5%	0 Ω
L2318	ERD25TC0T	CARBON	0.25W	5%	0 Ω
L3002	ERD25TC0T	CARBON	0.25W	5%	0 Ω
L3003	ERD25TC0T	CARBON	0.25W	5%	0 Ω
R001	ERJ6GEYJ393	S.M.CARB	0.1W	5%	39K Ω
R002	ERJ6GEYJ683	S.M.CARB	0.1W	5%	68K Ω
R003	ERJ6GEYJ683	S.M.CARB	0.1W	5%	68K Ω
R005	ERJ6GEY0R00	S.M.CARB	0.1W	5%	0 Ω
R008	ERJ6GEYJ472	S.M.CARB	0.1W	5%	4K7 Ω
R052	ERJ6GEYJ683	S.M.CARB	0.1W	5%	68K Ω

Cct Ref	Parts Number	Description				
R053	ERJ6GEYJ683	S.M.CARB	0.1W	5%	68K Ω	
R055	ERJ6GEY0R00	S.M.CARB	0.1W	5%	0 Ω	
R056	ERJ6GEYJ393	S.M.CARB	0.1W	5%	39K Ω	
R057	ERJ6GEY0R00	S.M.CARB	0.1W	5%	0 Ω	
R059	ERJ6ENF5600	S.M.CARB	0.1W	1%	560 Ω	
R060	ERJ6ENF5600	S.M.CARB	0.1W	1%	560 Ω	
R064	ERJ6GEYJ472	S.M.CARB	0.1W	5%	4K7 Ω	
R351	ERJ6GEYJ821	S.M.CARB	0.1W	5%	820 Ω	
R352	ERJ6ENF1801	S.M.CARB	0.1W	1%	1.8K Ω	
R353	ERJ6ENF1331	S.M.CARB	0.1W	1%	330 Ω	
R354	ERG3FJS823	METAL	3W	5%	82K Ω	
R355	ERJ6GEY0R00	S.M.CARB	0.1W	5%	0 Ω	
R356	ERJ6GEYJ822	S.M.CARB	0.1W	5%	8K2 Ω	
R357	ERC12GK471C	SOLID	0.5W	5%	470 Ω	
R360	ERJ6GEYJ561	S.M.CARB	0.1W	5%	560 Ω	
R361	ERJ6ENF1801	S.M.CARB	0.1W	1%	1.8K Ω	
R362	ERG3FJS823	METAL	3W	5%	82K Ω	
R363	ERJ6ENF1331	S.M.CARB	0.1W	1%	330 Ω	
R364	ERJ6GEY0R00	S.M.CARB	0.1W	5%	0 Ω	
R365	ERJ6GEYJ822	S.M.CARB	0.1W	5%	8K2 Ω	
R366	ERC12GK561	SOLID	0.5W	10%	560 Ω	
R370	ERJ6GEYJ271	S.M.CARB	0.1W	5%	270 Ω	
R371	ERJ6ENF1801	S.M.CARB	0.1W	1%	1.8K Ω	
R372	ERJ6ENF1331	S.M.CARB	0.1W	1%	330 Ω	
R373	ERG3FJ823	METAL	3W	5%	82K Ω	
R374	ERJ6GEY0R00	S.M.CARB	0.1W	5%	0 Ω	
R375	ERJ6GEYJ822	S.M.CARB	0.1W	5%	8K2 Ω	
R376	ERC12GK561	SOLID	0.5W	10%	560 Ω	
R382	ERJ6GEYJ103	S.M.CARB	0.1W	5%	10K Ω	
R385	ERJ6GEYJ184	S.M.CARB	0.1W	5%	180K Ω	
R387	ERDS1TJ471	CARBON	0.5W	5%	470 Ω	
R451	ERDS1TJ2R7	CARBON	0.5W	5%	2R7 Ω	
R452	ERDS1TJ3R3	CARBON	0.5W	5%	3R3 Ω	
R453	ERJ6GEYJ393	S.M.CARB	0.1W	5%	39K Ω	
R454	ERJ6GEYJ123	S.M.CARB	0.1W	5%	12K Ω	
R455	ERJ6GEYJ101	S.M.CARB	0.1W	5%	100 Ω	
R456	ERG3FJ221	METAL	3W	5%	220 Ω	
R457	ERJ6ENF7151	S.M.CARB	0.1W	1%	7K15 Ω	
R458	ERJ6ENF3481	S.M.CARB	0.1W	1%	3K48 Ω	
R459	ERJ6ENF9531	S.M.CARB	0.1W	1%	9K53 Ω	
R460	ERJ6ENF3011	S.M.CARB	0.1W	1%	300 Ω	
R461	ERDS1FJ1R0	CARBON	0.5W	5%	1 Ω	⚠
R462	ERJ6GEYJ103	S.M.CARB	0.1W	5%	10K Ω	
R463	ERJ6GEYJ563	S.M.CARB	0.1W	5%	56K Ω	
R464	ERJ6GEYJ103	S.M.CARB	0.1W	5%	10K Ω	
R465	ERJ6GEYJ103	S.M.CARB	0.1W	5%	10K Ω	
R467	ERJ6GEYJ471	S.M.CARB	0.1W	5%	470 Ω	
R468	ERJ6GEYJ224	S.M.CARB	0.1W	5%	220K Ω	
R469	ERJ6GEYJ472	S.M.CARB	0.1W	5%	4K7 Ω	
R470	ERJ6GEY0R00	S.M.CARB	0.1W	5%	0 Ω	
R471	ERJ6GEY0R00	S.M.CARB	0.1W	5%	0 Ω	
R472	ERJ6GEYJ272	S.M.CARB	0.1W	5%	2K7 Ω	
R475	ERJ6GEY0R00	S.M.CARB	0.1W	5%	0 Ω	
R507	ERDS2TJ104T	CARBON	2W	5%	100K Ω	
R508	ERD25TJ271	CARBON	0.25W	5%	270 Ω	
R509	ERX3FJ6R8H	METAL	3W	5%	6.8 Ω	
R510	ERG1FJS561	METAL	1W	5%	560 Ω	
R511	ERJ6GEYJ101	S.M.CARB	0.1W	5%	100 Ω	
R512	ERJ6GEYJ222	S.M.CARB	0.1W	5%	2K2 Ω	
R513	ERJ6GEYJ103	S.M.CARB	0.1W	5%	10K Ω	
R514	ERJ6GEYJ102	S.M.CARB	0.1W	5%	1K Ω	
R551	ERD25TJ103	CARBON	0.25W	5%	10K Ω	
R552	ERDS2TJ223T	CARBON	2W	5%	22K Ω	
R555	ERD25TJ473	CARBON	0.25W	5%	47K Ω	
R556	ERF2AKR22	WOUND	0.5W	5%	R22 Ω	
R557	ERO50PKF2802	METAL	0.5W	1%	8K Ω	⚠

Cct Ref	Parts Number	Description				
R558	ERDS2TJ223T	CARBON	2W	5%	22K Ω	
R559	ERD25TJ273	CARBON	0.25W	5%	27K Ω	
R560	ERD25TJ393	CARBON	0.25W	5%	39K Ω	
R564	ERO25CKF1002	METAL	0.25W	1%	10K Ω	⚠
R566	ERDS2TJ222T	CARBON	0.5W	5%	2K2 Ω	
R569	ERDS2TJ222T	CARBON	0.5W	5%	2K2 Ω	
R570	ERDS2TJ222T	CARBON	0.5W	5%	2K2 Ω	
R572	ERD25TJ153	CARBON	0.25W	5%	15K Ω	
R577	ERG3FJ331	METAL	3W	5%	330 Ω	⚠
R578	ERG3FJ331	METAL	3W	5%	330 Ω	⚠
R580	ERDS2TJ223T	CARBON	2W	5%	22K Ω	
R581	ERDS2TJ683T	CARBON	2W	5%	68K Ω	
R582	ERD25TJ274	CARBON	0.25W	5%	270K Ω	
R583	ERDS2TJ562	CARBON	2W	5%	5.6K Ω	
R584	ERD25TJ272F	CARBON	0.25W	5%	2K7 Ω	
R586	ERQ1CJP3R9	METAL	1W	5%	3R9 Ω	⚠
R591	EROS2TKF8871	METAL	2W	1%	8.87K Ω	
R592	ERO25TKF1132	METAL	0,25W	1%	1K13 Ω	
R593	ERQ14AJW100	FUSIBLE	0.25W	5%	10 Ω	⚠
R594	ERD25TJ334	CARBON	0.25W	5%	330K Ω	
R647	ERJ6GEYJ680	S.M.CARB	0.1W	5%	68 Ω	
R652	ERJ6GEYJ331	S.M.CARB	0.1W	5%	330 Ω	
R653	ERJ6GEYJ331	S.M.CARB	0.1W	5%	330 Ω	
R654	ERJ3GEYJ101	S.M.CARB	0.1W	5%	100 Ω	
R655	ERJ6GEYJ102	S.M.CARB	0.1W	5%	1K Ω	
R656	ERJ6GEYJ102	S.M.CARB	0.1W	5%	1K Ω	
R657	ERJ6GEYJ102	S.M.CARB	0.1W	5%	1K Ω	
R658	ERJ6GEYJ331	S.M.CARB	0.1W	5%	330 Ω	
R705	ERF5ZJ471	WOUND	5W	5%	470 Ω	
R714	ERDS1FJ680	CARBON	0.5W	5%	68 Ω	
R719	ERF5AK4R7	WOUND	5W	1%	4R7 Ω	
R779	ERJ6ENF1152	S.M.CARB	0.1W	1%	1K5 Ω	
R780	ERJ6GEYJ822	S.M.CARB	0.1W	5%	8K2 Ω	
R781	ERJ6GEYJ102	S.M.CARB	0.1W	5%	1K Ω	
R782	ERDS2TJ391T	CARBON	2W	5%	390 Ω	
R783	ERJ6GEYJ682	S.M.CARB	0.1W	5%	6K8 Ω	
R801	ERF7ZK2R7	WOUND	7W	20%	2R7 Ω	⚠
R803	ERG3FJS183	METAL	3W	5%	18K Ω	
R804	ERG3FJS183	METAL	3W	5%	18K Ω	
R806	ERX12SZJR12	METAL	0.5W	5%	R12 Ω	
R807	ERC14GK824C	SOLID	0.25W	10%	820K Ω	
R810	ERX12SZJR12	METAL	0.5W	5%	R12 Ω	
R815	ERDS1TJ151	CARBON	0.5W	5%	150 Ω	
R819	ERD25TJ681	CARBON	0.25W	5%	680 Ω	
R820	ERDS2TJ562	CARBON	2W	5%	5.6K Ω	
R836	ERDS2TJ152T	CARBON	0.5W	5%	1K5 Ω	
R837	ERDS2TJ152T	CARBON	0.5W	5%	1K5 Ω	
R839	ERD75TAJ825	CARBON	0.75W	5%	8M2 Ω	⚠
R841	ERF2AJ560	WOUND	2W	5%	56 Ω	
R842	ERG1FJS104	METAL	1W	5%	100K Ω	
R843	ERD25TJ101	CARBON	0.25W	5%	100 Ω	
R851	ERDS1TJ153	CARBON	0.5W	5%	15K Ω	
R853	ERD25TJ103	CARBON	0.25W	5%	10K Ω	
R854	ERDS1TJ333	CARBON	0.5W	5%	33K Ω	
R855	ERDS2TJ821T	CARBON	2W	5%	820 Ω	
R856	ERDS2TJ562	CARBON	2W	5%	5.6K Ω	
R857	ERF7ZK2R2	WOUND	7W	10%	2R2 Ω	
R859	ERDS2TJ333T	CARBON	2W	5%	33K Ω	
R860	ERDS1TJ182	CARBON	0.5W	10%	1K8 Ω	
R861	ERDS1FJ1R0	CARBON	0.5W	5%	1 Ω	⚠
R862	ERDS1FJ1R0	CARBON	0.5W	5%	1 Ω	⚠
R863	ERD25TJ102	CARBON	0.25W	5%	1K Ω	
R867	ERG3FJS153	METAL	3W	5%	15K Ω	
R871	ERDS2TJ332T	CARBON	2W	5%	3K2 Ω	
R872	ERDS2TJ154	CARBON	2W	5%	150K Ω	
R875	ERG3FJ220H	METAL	3W	5%	22 Ω	⚠

Cct Ref	Parts Number	Description				
R876	ERQ2CJP2R7	METAL	2W	2%	2R7 Ω	
R877	ERDS1TJ103	CARBON	0.5W	5%	10K Ω	
R878	ERDS2TJ221T	CARBON	0.5W	5%	220 Ω	
R879	ERD25TJ102	CARBON	0.25W	5%	1K Ω	
R880	ERX5FJ1R0	METAL	5W	5%	1 Ω	⚠
R881	ERDS1TJ122	CARBON	0.5W	5%	1K2 Ω	
R883	ERDS2TJ223T	CARBON	2W	5%	22K Ω	
R884	ERDS1TJ102	CARBON	0.5W	5%	1K Ω	
R885	ERD25TJ103	CARBON	0.25W	5%	10K Ω	
R888	ERD25TJ102	CARBON	0.25W	5%	1K Ω	
R891	ERC12ZGK105D	SOLID	0.5W	10%	1M Ω	
R901	ERDS1FJ102	CARBON	0.5W	5%	1K Ω	
R902	ERJ6GEYJ333	S.M.CARB	0.1W	5%	33K Ω	
R903	ERJ6GEYJ183	S.M.CARB	0.1W	5%	18K Ω	
R904	ERJ6GEYJ682	S.M.CARB	0.1W	5%	6K8 Ω	
R905	ERJ6GEYJ472	S.M.CARB	0.1W	5%	4K7 Ω	
R906	ERJ6GEYJ271	S.M.CARB	0.1W	5%	270 Ω	
R907	ERJ6GEYJ510	S.M.CARB	0.1W	5%	51 Ω	
R908	ERJ6GEYJ391	S.M.CARB	0.1W	5%	390 Ω	
R909	ERJ6GEYJ271	S.M.CARB	0.1W	5%	270 Ω	
R950	ERQ1CJP331	FUSIBLE	1W	5%	330 Ω	⚠
R952	ERJ6GEYJ561	S.M.CARB	0.1W	5%	560 Ω	
R953	ERJ6GEYJ271	S.M.CARB	0.1W	5%	270 Ω	
R954	ERDS1FYJ561P	CARBON	0.5W	5%	560 Ω	
R955	ERJ6GEYJ271	S.M.CARB	0.1W	5%	270 Ω	
R956	ERDS1FYJ561P	CARBON	0.5W	5%	560 Ω	
R957	ERDS1TJ330	CARBON	0.5W	5%	33 Ω	
R958	ERDS1TJ330	CARBON	0.5W	5%	33 Ω	
R960	ERQ14AJ100	FUSIBLE	0.25W	5%	10 Ω	⚠
R962	ERQ14AJ120	METAL	0.25W	5%	12 Ω	⚠
R963	ERQ14AJ120	METAL	0.25W	5%	12 Ω	⚠
R964	ERJ6GEYJ222	S.M.CARB	0.1W	5%	2K2 Ω	
R965	ERJ6GEYJ683	S.M.CARB	0.1W	5%	68K Ω	
R966	ERG3FJS151	METAL	3W	5%	150 Ω	
R967	ERJ6GEYJ683	S.M.CARB	0.1W	5%	68K Ω	
R968	ERJ6GEYJ222	S.M.CARB	0.1W	5%	2K2 Ω	
R969	ERDS1FJ390	CARBON	0.5W	5%	39 Ω	⚠
R970	ERJ6GEYJ2R7	S.M.CARB	0.1W	5%	2R7 Ω	
R971	ERJ6GEYJ2R7	S.M.CARB	0.1W	5%	2R7 Ω	
R972	ERDS1FJ390	CARBON	0.5W	5%	39 Ω	⚠
R973	ERDS1FJ121	CARBON	0.5W	5%	120 Ω	⚠
R1042	ERD25TC0T	CARBON	0.25W	5%	0 Ω	
R1043	ERD25TJ682	CARBON	0.25W	5%	6K8 Ω	
R1044	ERD25TJ123	CARBON	0.25W	5%	12K Ω	
R1045	ERDS2TJ223T	CARBON	2W	5%	22K Ω	
R1046	ERDS2TJ683T	CARBON	2W	5%	68K Ω	
R1050	ERJ6GEYJ104	S.M.CARB	0.1W	5%	100K Ω	
R1051	ERJ6GEYJ101	S.M.CARB	0.1W	5%	100 Ω	
R1052	ERJ6GEYJ102	S.M.CARB	0.1W	5%	1K Ω	
R1081	ERDS2TJ332T	CARBON	2W	5%	3K2 Ω	
R1082	ERD25TJ103	CARBON	0.25W	5%	10K Ω	
R1083	ERD25TJ101	CARBON	0.25W	5%	100 Ω	
R1084	ERDS1TJ101	CARBON	0.5W	5%	100 Ω	
R1101	ERJ3GEYJ562V	S.M.CARB	0.125	5%	5.6K Ω	
R1102	ERJ3GEYJ562V	S.M.CARB	0.125	5%	5.6K Ω	
R1103	ERJ6GEYJ473	S.M.CARB	0.1W	5%	47K Ω	
R1104	ERJ6GEYJ101	S.M.CARB	0.1W	5%	100 Ω	
R1105	ERJ6GEYJ473	S.M.CARB	0.1W	5%	47K Ω	
R1106	ERJ3GEYJ472V	S.M.CARB	0.125	5%	4.7K Ω	
R1107	ERJ6GEYJ272	S.M.CARB	0.1W	5%	2K7 Ω	
R1108	ERJ6GEYJ272	S.M.CARB	0.1W	5%	2K7 Ω	
R1109	ERJ6GEYJ272	S.M.CARB	0.1W	5%	2K7 Ω	
R1110	ERJ6GEYJ272	S.M.CARB	0.1W	5%	2K7 Ω	
R1111	ERJ3GEYJ101	S.M.CARB	0.1W	5%	100 Ω	
R1112	ERJ3GEYJ101	S.M.CARB	0.1W	5%	100 Ω	
R1113	ERJ3GEYJ103	S.M.CARB	0.1W	5%	10K Ω	

Cct Ref	Parts Number	Description				
R1114	ERJ6GEYJ102	S.M.CARB	0.1W	5%	1K Ω	
R1115	ERJ6GEYJ101	S.M.CARB	0.1W	5%	100 Ω	
R1116	ERJ3GEYJ153V	S.M.CARB	0.1W	5%	15K Ω	
R1117	ERJ3GEYJ472V	S.M.CARB	0.125	5%	4.7K Ω	
R1118	ERJ3GEYJ101	S.M.CARB	0.1W	5%	100 Ω	
R1119	ERJ3GEYJ101	S.M.CARB	0.1W	5%	100 Ω	
R1120	ERJ3GEYJ101	S.M.CARB	0.1W	5%	100 Ω	
R1121	ERJ3GEYJ101	S.M.CARB	0.1W	5%	100 Ω	
R1122	ERJ3GEYJ103	S.M.CARB	0.1W	5%	10K Ω	
R1123	ERJ3GEYJ103	S.M.CARB	0.1W	5%	10K Ω	
R1124	ERJ3GEYJ103	S.M.CARB	0.1W	5%	10K Ω	
R1125	ERJ3GEYJ103	S.M.CARB	0.1W	5%	10K Ω	
R1126	ERJ3GEYJ472V	S.M.CARB	0.125	5%	4.7K Ω	
R1127	ERJ3GEY0R00	S.M.CARB	0.1W	5%	0 Ω	
R1128	ERJ3GEYJ273	S.M.CARB	0.125	5%	27K Ω	
R1129	ERJ3GEYJ101	S.M.CARB	0.1W	5%	100 Ω	
R1131	ERJ3GEY0R00	S.M.CARB	0.1W	5%	0 Ω	
R1132	ERJ6GEYJ101	S.M.CARB	0.1W	5%	100 Ω	
R1134	ERJ3GEYJ473V	S.M.CARB	0.125	5%	47K Ω	
R1135	ERJ3GEYJ224V	S.M.CARB	0.16W	5%	220 Ω	
R1136	ERJ3GEYJ473V	S.M.CARB	0.125	5%	47K Ω	
R1137	ERJ3GEYJ104V	S.M.CARB	0.1W	5%	100K Ω	
R1138	ERJ3GEYJ223V	S.M.CARB	0.1W	5%	22K Ω	
R1139	ERJ3GEYJ104V	S.M.CARB	0.1W	5%	100K Ω	
R1140	ERJ6GEYJ225	S.M.CARB	0.1W	5%	2M2 Ω	
R1141	ERJ3GEYJ101	S.M.CARB	0.1W	5%	100 Ω	
R1142	ERJ3GEYJ221	S.M.CARB	0.1W	5%	220 Ω	
R1144	ERJ3GEYJ472V	S.M.CARB	0.125	5%	4.7K Ω	
R1145	ERJ3GEYJ391	S.M.CARB	0.125	5%	390 Ω	
R1146	ERJ3GEYJ103	S.M.CARB	0.1W	5%	10K Ω	
R1147	ERJ3GEYJ101	S.M.CARB	0.1W	5%	100 Ω	
R1148	ERJ3GEYJ273	S.M.CARB	0.125	5%	27K Ω	
R1149	ERJ6GEYJ103	S.M.CARB	0.1W	5%	10K Ω	
R1150	ERJ6GEYJ103	S.M.CARB	0.1W	5%	10K Ω	
R1153	ERJ3GEYJ563V	S.M.CARB	0.125	5%	56K Ω	
R1154	ERJ3GEYJ102	S.M.CARB	0.1W	5%	1K Ω	
R1155	ERJ3GEYJ223V	S.M.CARB	0.1W	5%	22K Ω	
R1156	ERJ3GEYJ472V	S.M.CARB	0.125	5%	4.7K Ω	
R1157	ERJ3GEYJ101	S.M.CARB	0.1W	5%	100 Ω	
R1158	ERJ3GEYJ101	S.M.CARB	0.1W	5%	100 Ω	
R1160	ERJ3GEYJ182V	S.M.CARB	0.1W	5%	1.8K Ω	
R1161	ERJ6GEYJ103	S.M.CARB	0.1W	5%	10K Ω	
R1162	ERJ6GEYJ123	S.M.CARB	0.1W	5%	12K Ω	
R1163	ERJ6GEYJ222	S.M.CARB	0.1W	5%	2K2 Ω	
R1164	ERJ6GEYJ222	S.M.CARB	0.1W	5%	2K2 Ω	
R1166	ERJ6GEYJ332	S.M.CARB	0.1W	5%	3K3 Ω	
R1168	ERJ6GEYJ103	S.M.CARB	0.1W	5%	10K Ω	
R1169	ERJ3GEY0R00	S.M.CARB	0.1W	5%	0 Ω	
R1170	ERJ3GEYJ103	S.M.CARB	0.1W	5%	10K Ω	
R1172	ERJ3GEYJ472V	S.M.CARB	0.125	5%	4.7K Ω	
R1178	ERJ3GEY0R00	S.M.CARB	0.1W	5%	0 Ω	
R1179	ERJ3GEYJ682V	S.M.CARB	0.125	5%	6.8K Ω	
R1180	ERJ3GEYJ392V	S.M.CARB	0.125	5%	3.9K Ω	
R1188	ERJ3GEYJ101	S.M.CARB	0.1W	5%	100 Ω	
R1189	ERJ3GEYJ101	S.M.CARB	0.1W	5%	100 Ω	
R1190	ERJ3GEYJ101	S.M.CARB	0.1W	5%	100 Ω	
R1191	ERJ3GEYJ101	S.M.CARB	0.1W	5%	100 Ω	
R1192	ERJ3GEYJ101	S.M.CARB	0.1W	5%	100 Ω	
R1193	ERJ3GEYJ101	S.M.CARB	0.1W	5%	100 Ω	
R1194	ERJ3GEYJ220	S.M.CARB	0.1W	5%	22 Ω	
R1195	ERJ3GEYJ101	S.M.CARB	0.1W	5%	100 Ω	
R1196	EXB38V680JV	CHIP	0.063	5%	680 Ω	⚠
R1202	EXB38V680JV	CHIP	0.063	5%	680 Ω	⚠
R1205	EXB38V680JV	CHIP	0.063	5%	680 Ω	⚠
R1209	EXB38V680JV	CHIP	0.063	5%	680 Ω	⚠
R1214	EXB38V680JV	CHIP	0.063	5%	680 Ω	⚠

Cct Ref	Parts Number	Description			
R1217	EXB38V680JV	CHIP	0.063	5%	680 Ω ⚠
R1221	EXB38V680JV	CHIP	0.063	5%	680 Ω ⚠
R1225	EXB38V680JV	CHIP	0.063	5%	680 Ω ⚠
R1232	EXB38V680JV	CHIP	0.063	5%	680 Ω ⚠
R1233	EXB38V680JV	CHIP	0.063	5%	680 Ω ⚠
R1236	EXB38V680JV	CHIP	0.063	5%	680 Ω ⚠
R1239	ERJ6GEYJ223	S.M.CARB	0.1W	5%	22K Ω
R1240	ERJ6GEYJ223	S.M.CARB	0.1W	5%	22K Ω
R1241	ERJ6GEYJ473	S.M.CARB	0.1W	5%	47K Ω
R1242	ERJ6GEY0R00	S.M.CARB	0.1W	5%	0 Ω
R1243	ERJ6GEYJ562	S.M.CARB	0.1W	5%	5K6 Ω
R1249	ERJ3GEY0R00	S.M.CARB	0.1W	5%	0 Ω
R1250	ERJ3GEY0R00	S.M.CARB	0.1W	5%	0 Ω
R1251	ERJ6GEYJ103	S.M.CARB	0.1W	5%	10K Ω
R1253	ERJ6GEY0R00	S.M.CARB	0.1W	5%	0 Ω
R1255	ERJ3GEYJ472V	S.M.CARB	0.125	5%	4.7K Ω
R1256	ERJ3GEYJ473V	S.M.CARB	0.125	5%	47K Ω
R1257	ERJ3GEY0R00	S.M.CARB	0.1W	5%	0 Ω
R1258	ERJ3GEYJ223V	S.M.CARB	0.1W	5%	22K Ω
R1264	ERJ3GEYJ471V	S.M.CARB	0.125	5%	470 Ω
R1293	ERJ6ENF3901	S.M.CARB	0.1W	1%	3K9 Ω
R1294	ERJ6ENF3901	S.M.CARB	0.1W	1%	3K9 Ω
R1301	ERJ3GEYJ102	S.M.CARB	0.1W	5%	1K Ω
R1303	ERJ6ENF56R0	S.M.CARB	0.1W	1%	56 Ω
R1304	ERJ3GEYJ682V	S.M.CARB	0.125	5%	6.8K Ω
R1305	ERJ6ENF56R0	S.M.CARB	0.1W	1%	56 Ω
R1306	ERJ6ENF1200	S.M.CARB	0.1W	1%	20 Ω
R1307	ERJ3GEYJ472V	S.M.CARB	0.125	5%	4.7K Ω
R1308	ERJ3GEYJ472V	S.M.CARB	0.125	5%	4.7K Ω
R1309	ERJ6ENF3300	S.M.CARB	0.1W	1%	330 Ω
R1310	ERJ6ENF3300	S.M.CARB	0.1W	1%	330 Ω
R1311	ERJ3GEYJ562V	S.M.CARB	0.125	5%	5.6K Ω
R1312	ERJ3GEYJ332	S.M.CARB	0.125	5%	3.3K Ω
R1313	ERJ3GEYJ272	S.M.CARB	0.125	5%	2K7 Ω
R1314	ERJ3GEYJ272	S.M.CARB	0.125	5%	2K7 Ω
R1315	ERJ3GEYJ221	S.M.CARB	0.1W	5%	220 Ω
R1316	ERJ3GEYJ562V	S.M.CARB	0.125	5%	5.6K Ω
R1317	ERJ3GEY0R00	S.M.CARB	0.1W	5%	0 Ω
R1318	ERJ3GEYJ102	S.M.CARB	0.1W	5%	1K Ω
R1319	ERJ6ENF9530V	S.M.CARB	0.1W	1%	9K53 Ω
R1320	ERJ3GEYJ102	S.M.CARB	0.1W	5%	1K Ω
R1321	ERJ3GEYJ152	S.M.CARB	0.1W	5%	150K Ω
R1322	ERJ3GEYJ151	S.M.CARB	0.1W	5%	150 Ω
R1323	ERJ6ENF47R0	S.M.CARB	0.1W	1%	47 Ω
R1324	ERJ3GEYJ152	S.M.CARB	0.1W	5%	150K Ω
R1326	ERJ6ENF47R0	S.M.CARB	0.1W	1%	47 Ω
R1327	ERJ6ENF1500	S.M.CARB	0.1W	1%	15 Ω
R1329	ERJ6ENF47R0	S.M.CARB	0.1W	1%	47 Ω
R1332	ERJ3GEYJ220	S.M.CARB	0.1W	5%	22 Ω
R1335	ERJ3GEYJ220	S.M.CARB	0.1W	5%	22 Ω
R1338	ERJ3GEYJ472V	S.M.CARB	0.125	5%	4.7K Ω
R1339	ERJ3GEYJ121	S.M.CARB	0.1W	5%	120 Ω
R1340	ERJ6GEYJ331	S.M.CARB	0.1W	5%	330 Ω
R1341	ERJ6GEYJ331	S.M.CARB	0.1W	5%	330 Ω
R1343	ERJ3GEYJ472V	S.M.CARB	0.125	5%	4.7K Ω
R1344	ERJ6ENF1500	S.M.CARB	0.1W	1%	15 Ω
R1345	ERJ3GEYJ103	S.M.CARB	0.1W	5%	10K Ω
R1348	ERJ6ENF1910	S.M.CARB	0.1W	1%	191 Ω
R1349	ERJ6ENF2701	S.M.CARB	0.1W	1%	27 Ω
R1350	ERJ6ENF2200	S.M.CARB	0.1W	1%	22 Ω
R1351	ERJ6ENF2701	S.M.CARB	0.1W	1%	27 Ω
R1352	ERJ6ENF2200	S.M.CARB	0.1W	1%	22 Ω
R1353	ERJ3GEYJ221	S.M.CARB	0.1W	5%	220 Ω
R1354	ERJ3GEYJ151	S.M.CARB	0.1W	5%	150 Ω
R1355	ERJ3GEYJ272	S.M.CARB	0.125	5%	2K7 Ω
R1356	ERJ3GEYJ331	S.M.CARB	0.125	5%	330 Ω

Cct Ref	Parts Number	Description			
R1357	ERJ3GEYJ272	S.M.CARB	0.125	5%	2K7 Ω
R1358	ERJ3GEYJ102	S.M.CARB	0.1W	5%	1K Ω
R1359	ERJ3GEYJ103	S.M.CARB	0.1W	5%	10K Ω
R1360	ERJ6ENF5601	S.M.CARB	0.1W	1%	5K6 Ω
R1361	ERJ3GEYJ151	S.M.CARB	0.1W	5%	150 Ω
R1362	ERJ3GEYJ471V	S.M.CARB	0.125	5%	470 Ω
R1363	ERJ3GEYJ101	S.M.CARB	0.1W	5%	100 Ω
R1364	ERJ3GEYJ101	S.M.CARB	0.1W	5%	100 Ω
R1365	ERJ3GEYJ101	S.M.CARB	0.1W	5%	100 Ω
R1366	ERJ3GEYJ471V	S.M.CARB	0.125	5%	470 Ω
R1367	ERJ6ENF3000	S.M.CARB	0.1W	1%	30 Ω
R1368	ERJ3GEYJ221	S.M.CARB	0.1W	5%	220 Ω
R1369	ERJ3GEYJ823V	S.M.CARB	0.125	5%	82K Ω
R1370	ERJ3GEYJ103	S.M.CARB	0.1W	5%	10K Ω
R1371	ERJ3GEYJ273	S.M.CARB	0.125	5%	27K Ω
R1372	ERJ3GEYJ471V	S.M.CARB	0.125	5%	470 Ω
R1373	ERJ3GEYJ273	S.M.CARB	0.125	5%	27K Ω
R1374	ERJ3GEYJ471V	S.M.CARB	0.125	5%	470 Ω
R1375	ERJ3GEYJ102	S.M.CARB	0.1W	5%	1K Ω
R1376	ERJ3GEYJ102	S.M.CARB	0.1W	5%	1K Ω
R1377	ERJ3GEYJ334	S.M.CARB	0.125	5%	330K Ω
R1379	ERJ3GEYJ471V	S.M.CARB	0.125	5%	470 Ω
R1380	ERJ3GEYJ273	S.M.CARB	0.125	5%	27K Ω
R1381	ERJ3GEYJ471V	S.M.CARB	0.125	5%	470 Ω
R1382	ERJ3GEYJ273	S.M.CARB	0.125	5%	27K Ω
R1383	ERJ3GEYJ272	S.M.CARB	0.125	5%	2K7 Ω
R1384	ERJ3GEYJ471V	S.M.CARB	0.125	5%	470 Ω
R1385	ERJ3GEYJ470V	S.M.CARB	0.125	5%	47 Ω
R1387	ERJ3GEYJ471V	S.M.CARB	0.125	5%	470 Ω
R1388	ERJ3GEYJ102	S.M.CARB	0.1W	5%	1K Ω
R1389	ERJ3GEYJ332	S.M.CARB	0.125	5%	3.3K Ω
R1390	ERJ3GEYJ102	S.M.CARB	0.1W	5%	1K Ω
R1391	ERJ3GEYJ222	S.M.CARB	0.125	5%	2K2 Ω
R1392	ERJ3GEYJ102	S.M.CARB	0.1W	5%	1K Ω
R1393	ERJ3GEYJ222	S.M.CARB	0.125	5%	2K2 Ω
R1394	ERJ3GEYJ331	S.M.CARB	0.125	5%	330 Ω
R1395	ERJ6ENF6200	S.M.CARB	0.1W	1%	6.2K Ω
R1396	ERJ6ENF3301	S.M.CARB	0.1W	1%	330 Ω
R1402	ERJ3GEY0R00	S.M.CARB	0.1W	5%	0 Ω
R1403	ERJ3GEYJ181	S.M.CARB	0.125	5%	180 Ω
R1406	ERJ3GEYJ101	S.M.CARB	0.1W	5%	100 Ω
R1407	ERJ3GEYJ221	S.M.CARB	0.1W	5%	220 Ω
R1408	ERJ3GEYJ152	S.M.CARB	0.1W	5%	150K Ω
R1409	ERJ6GEY0R00	S.M.CARB	0.1W	5%	0 Ω
R1411	ERJ6GEYJ471	S.M.CARB	0.1W	5%	470 Ω
R1412	ERJ3GEYJ221	S.M.CARB	0.1W	5%	220 Ω
R1413	ERJ6GEYJ104	S.M.CARB	0.1W	5%	100K Ω
R1414	ERJ6GEY0R00	S.M.CARB	0.1W	5%	0 Ω
R1415	ERJ3GEYJ102	S.M.CARB	0.1W	5%	1K Ω
R1416	ERJ3GEYJ152	S.M.CARB	0.1W	5%	150K Ω
R1417	ERJ6ENF56R0	S.M.CARB	0.1W	1%	56 Ω
R1418	ERJ6ENF56R0	S.M.CARB	0.1W	1%	56 Ω
R1419	ERJ6ENF2000	S.M.CARB	0.1W	1%	20 Ω
R1420	ERJ6ENF2001	S.M.CARB	0.1W	1%	2K Ω
R1421	ERJ3GEYJ561V	S.M.CARB	0.125	5%	560 Ω
R1423	ERJ6GEYJ471	S.M.CARB	0.1W	5%	470 Ω
R1425	ERJ6ENF2001	S.M.CARB	0.1W	1%	2K Ω
R1426	ERJ6ENF2001	S.M.CARB	0.1W	1%	2K Ω
R1427	ERJ6ENF56R0	S.M.CARB	0.1W	1%	56 Ω
R1428	ERJ6ENF56R0	S.M.CARB	0.1W	1%	56 Ω
R1429	ERJ3GEYJ102	S.M.CARB	0.1W	5%	1K Ω
R1430	ERJ6GEYJ821	S.M.CARB	0.1W	5%	820 Ω
R1431	ERJ3GEYJ102	S.M.CARB	0.1W	5%	1K Ω
R1432	ERJ6ENF56R0	S.M.CARB	0.1W	1%	56 Ω
R1433	ERJ6ENF47R0	S.M.CARB	0.1W	1%	47 Ω
R1434	ERJ6GEY0R00	S.M.CARB	0.1W	5%	0 Ω

Cct Ref	Parts Number	Description			
R1435	ERJ6GEY0R00	S.M.CARB	0.1W	5%	0 Ω
R1436	ERJ6ENF47R0	S.M.CARB	0.1W	1%	47 Ω
R1437	ERJ6ENF1500	S.M.CARB	0.1W	1%	15 Ω
R1438	ERJ6GEYJ471	S.M.CARB	0.1W	5%	470 Ω
R1439	ERJ6GEYJ101	S.M.CARB	0.1W	5%	100 Ω
R1440	ERJ3GEYJ101	S.M.CARB	0.1W	5%	100 Ω
R1441	ERJ6ENF1501	S.M.CARB	0.1W	1%	1R5K Ω
R1442	ERJ6ENF1501	S.M.CARB	0.1W	1%	1R5K Ω
R1443	ERJ6ENF47R0	S.M.CARB	0.1W	1%	47 Ω
R1444	ERJ3GEYJ102	S.M.CARB	0.1W	5%	1K Ω
R1445	ERJ3GEYJ102	S.M.CARB	0.1W	5%	1K Ω
R1446	ERJ6GEYJ331	S.M.CARB	0.1W	5%	330 Ω
R1447	ERJ6ENF1500	S.M.CARB	0.1W	1%	15 Ω
R1448	ERJ6ENF1500	S.M.CARB	0.1W	1%	15 Ω
R1451	ERJ6ENF5490	S.M.CARB	0.1W	1%	549 Ω
R1452	ERJ6ENF4750	S.M.CARB	0.1W	5%	75 Ω
R1453	ERJ3GEYJ180	S.M.CARB	0.125	5%	18 Ω
R1454	ERJ3GEYJ472V	S.M.CARB	0.125	5%	4.7K Ω
R1455	ERJ3GEYJ391	S.M.CARB	0.125	5%	390 Ω
R1457	ERJ6GEYJ224	S.M.CARB	0.1W	5%	220K Ω
R1458	ERJ6ENF6201V	S.M.CARB	0.1W	1%	6K2 Ω
R1459	ERJ6ENF4751	S.M.CARB	0.1W	1%	4K75 Ω
R1460	ERJ6GEYJ103	S.M.CARB	0.1W	5%	10K Ω
R1461	ERJ6ENF3161	S.M.CARB	0.1W	1%	3K16 Ω
R1465	ERJ3GEYJ151	S.M.CARB	0.1W	5%	150 Ω
R1466	ERJ3GEYJ272	S.M.CARB	0.125	5%	2K7 Ω
R1467	ERJ3GEYJ331	S.M.CARB	0.125	5%	330 Ω
R1468	ERJ3GEYJ272	S.M.CARB	0.125	5%	2K7 Ω
R1471	ERJ3GEYJ272	S.M.CARB	0.125	5%	2K7 Ω
R1473	ERJ6GEYJ683	S.M.CARB	0.1W	5%	68K Ω
R1474	ERJ6GEYJ274	S.M.CARB	0.1W	5%	270K Ω
R1475	ERJ3GEYJ561V	S.M.CARB	0.125	5%	560 Ω
R1476	ERJ3GEYJ103	S.M.CARB	0.1W	5%	10K Ω
R1477	ERJ3GEYJ823V	S.M.CARB	0.125	5%	82K Ω
R1478	ERJ3GEYJ471V	S.M.CARB	0.125	5%	470 Ω
R1480	ERJ3GEYJ471V	S.M.CARB	0.125	5%	470 Ω
R1481	ERJ3GEYJ471V	S.M.CARB	0.125	5%	470 Ω
R1482	ERJ6GEYJ472	S.M.CARB	0.1W	5%	4K7 Ω
R1485	ERJ3GEYJ102	S.M.CARB	0.1W	5%	1K Ω
R1492	ERJ3GEYJ471V	S.M.CARB	0.125	5%	470 Ω
R1529	ERJ6GEYJ100	S.M.CARB	0.1W	5%	10 Ω
R1531	ERJ6GEYJ100	S.M.CARB	0.1W	5%	10 Ω
R1543	ERJ6GEYJ100	S.M.CARB	0.1W	5%	10 Ω
R1544	ERJ6GEYJ151	S.M.CARB	0.1W	5%	150 Ω
R1545	ERJ6GEYJ151	S.M.CARB	0.1W	5%	150 Ω
R1546	ERJ6GEYJ151	S.M.CARB	0.1W	5%	150 Ω
R1547	ERJ6GEYJ151	S.M.CARB	0.1W	5%	150 Ω
R1548	ERJ6GEYJ151	S.M.CARB	0.1W	5%	150 Ω
R1549	ERJ3GEYJ472V	S.M.CARB	0.125	5%	4.7K Ω
R1550	ERJ3GEYJ821V	S.M.CARB	0.125	5%	820 Ω
R2004	ERJ6GEYJ222	S.M.CARB	0.1W	5%	2K2 Ω
R2006	ERJ6GEYJ222	S.M.CARB	0.1W	5%	2K2 Ω
R2007	ERJ6GEYJ222	S.M.CARB	0.1W	5%	2K2 Ω
R2008	ERJ6GEYJ222	S.M.CARB	0.1W	5%	2K2 Ω
R2009	ERJ6GEYJ332	S.M.CARB	0.1W	5%	3K3 Ω
R2010	ERJ6GEYJ471	S.M.CARB	0.1W	5%	470 Ω
R2011	ERJ6GEYJ561	S.M.CARB	0.1W	5%	560 Ω
R2012	ERJ6GEYJ332	S.M.CARB	0.1W	5%	3K3 Ω
R2013	ERJ6GEYJ821	S.M.CARB	0.1W	5%	820 Ω
R2015	ERJ6GEYJ101	S.M.CARB	0.1W	5%	100 Ω
R2016	ERJ6GEYJ331	S.M.CARB	0.1W	5%	330 Ω
R2017	ERJ6GEYJ102	S.M.CARB	0.1W	5%	1K Ω
R2018	ERJ6GEYJ103	S.M.CARB	0.1W	5%	10K Ω
R2019	ERJ6GEYJ471	S.M.CARB	0.1W	5%	470 Ω
R2025	ERJ6GEYJ472	S.M.CARB	0.1W	5%	4K7 Ω
R2026	ERJ6GEYJ472	S.M.CARB	0.1W	5%	4K7 Ω

Cct Ref	Parts Number	Description			
R2030	ERJ6GEYJ101	S.M.CARB	0.1W	5%	100 Ω
R2031	ERJ6GEYJ101	S.M.CARB	0.1W	5%	100 Ω
R2033	ERJ6GEY0R00	S.M.CARB	0.1W	5%	0 Ω
R2034	ERJ6GEY0R00	S.M.CARB	0.1W	5%	0 Ω
R2035	ERJ6GEY0R00	S.M.CARB	0.1W	5%	0 Ω
R2036	ERJ6GEY0R00	S.M.CARB	0.1W	5%	0 Ω
R2039	ERJ6GEYJ101	S.M.CARB	0.1W	5%	100 Ω
R2040	ERJ6GEYJ101	S.M.CARB	0.1W	5%	100 Ω
R2041	ERJ6GEYJ103	S.M.CARB	0.1W	5%	10K Ω
R2042	ERJ6GEYJ102	S.M.CARB	0.1W	5%	1K Ω
R2043	ERJ6GEYJ103	S.M.CARB	0.1W	5%	10K Ω
R2044	ERJ6GEYJ103	S.M.CARB	0.1W	5%	10K Ω
R2050	ERJ6GEYJ223	S.M.CARB	0.1W	5%	22K Ω
R2051	ERJ6GEYJ223	S.M.CARB	0.1W	5%	22K Ω
R2052	ERJ6GEYJ103	S.M.CARB	0.1W	5%	10K Ω
R2251	ERJ6GEYJ102	S.M.CARB	0.1W	5%	1K Ω
R2252	ERJ6GEYJ102	S.M.CARB	0.1W	5%	1K Ω
R2253	ERJ6GEYJ104	S.M.CARB	0.1W	5%	100K Ω
R2254	ERJ6GEYJ104	S.M.CARB	0.1W	5%	100K Ω
R2255	ERJ6GEYJ102	S.M.CARB	0.1W	5%	1K Ω
R2256	ERJ6GEYJ104	S.M.CARB	0.1W	5%	100K Ω
R2257	ERJ6GEYJ104	S.M.CARB	0.1W	5%	100K Ω
R2258	ERJ6GEYJ102	S.M.CARB	0.1W	5%	1K Ω
R2301	ERJ6GEYJ103	S.M.CARB	0.1W	5%	10K Ω
R2303	ERJ6GEY0R00	S.M.CARB	0.1W	5%	0 Ω
R2304	ERJ6GEYJ103	S.M.CARB	0.1W	5%	10K Ω
R2305	ERJ6GEYJ101	S.M.CARB	0.1W	5%	100 Ω
R2306	ERJ6ENF5232	S.M.CARB	0.1W	1%	52K3 Ω
R2307	ERJ6ENF4701	S.M.CARB	0.1W	1%	4K7 Ω
R2308	ERJ6GEYJ103	S.M.CARB	0.1W	5%	10K Ω
R2309	ERJ6GEYJ683	S.M.CARB	0.1W	5%	68K Ω
R2310	ERJ6GEYJ223	S.M.CARB	0.1W	5%	22K Ω
R2311	ERJ6GEYJ752	S.M.CARB	0.1W	5%	7K5 Ω
R2312	ERJ6GEYJ134	S.M.CARB	0.1W	5%	130K Ω
R2315	ERJ6GEYJ223	S.M.CARB	0.1W	5%	22K Ω
R2316	ERJ6GEYJ152	S.M.CARB	0.1W	5%	1K5 Ω
R2317	ERJ6GEYJ103	S.M.CARB	0.1W	5%	10K Ω
R2318	ERJ6GEY0R00	S.M.CARB	0.1W	5%	0 Ω
R2319	ERJ6GEYJ683	S.M.CARB	0.1W	5%	68K Ω
R2321	ERJ6GEYJ562	S.M.CARB	0.1W	5%	5K6 Ω
R2322	ERJ6GEYJ562	S.M.CARB	0.1W	5%	5K6 Ω
R2323	ERJ6ENF4701	S.M.CARB	0.1W	1%	4K7 Ω
R2324	ERJ6GEY0R00	S.M.CARB	0.1W	5%	0 Ω
R2325	ERJ6GEY0R00	S.M.CARB	0.1W	5%	0 Ω
R2326	ERJ6GEY0R00	S.M.CARB	0.1W	5%	0 Ω
R2327	ERJ6GEYJ103	S.M.CARB	0.1W	5%	10K Ω
R2328	ERJ6GEYJ152	S.M.CARB	0.1W	5%	1K5 Ω
R2329	ERJ6GEYJ752	S.M.CARB	0.1W	5%	7K5 Ω
R2330	ERD25TJ101	CARBON	0.25W	5%	100 Ω
R2331	ERJ6GEYJ102	S.M.CARB	0.1W	5%	1K Ω
R2332	ERJ6GEYJ101	S.M.CARB	0.1W	5%	100 Ω
R2334	ERJ6ENF5232	S.M.CARB	0.1W	1%	52K3 Ω
R2335	ERJ6ENF6802V	S.M.CARB	0.1W	1%	68K Ω
R2336	ERJ6GEYJ103	S.M.CARB	0.1W	5%	10K Ω
R2337	ERJ6ENF1202	S.M.CARB	0.1W	1%	1K2 Ω
R2338	ERJ6GEYJ222	S.M.CARB	0.1W	5%	2K2 Ω
R2339	ERJ6GEYJ222	S.M.CARB	0.1W	5%	2K2 Ω
R2340	ERJ6GEYJ103	S.M.CARB	0.1W	5%	10K Ω
R2341	ERJ6GEYJ103	S.M.CARB	0.1W	5%	10K Ω
R2342	ERJ6GEYJ103	S.M.CARB	0.1W	5%	10K Ω
R2345	ERJ6GEYJ332	S.M.CARB	0.1W	5%	3K3 Ω
R2346	ERJ6GEYJ303	S.M.CARB	0.1W	5%	30K Ω
R2348	ERJ6GEYJ183	S.M.CARB	0.1W	5%	18K Ω
R2349	ERJ6GEYJ332	S.M.CARB	0.1W	5%	3K3 Ω
R2350	ERJ6GEYJ332	S.M.CARB	0.1W	5%	3K3 Ω
R2351	ERJ6GEYJ102	S.M.CARB	0.1W	5%	1K Ω

Cct Ref	Parts Number	Description				
R2352	ERJ6GEYJ102	S.M.CARB	0.1W	5%	1K Ω	
R2354	ERX5FJ1R0	METAL	5W	5%	1 Ω	⚠
R2356	ERJ6GEYJ393	S.M.CARB	0.1W	5%	39K Ω	
R2357	ERJ6GEYJ273	S.M.CARB	0.1W	5%	27K Ω	
R2358	ERJ6GEYJ822	S.M.CARB	0.1W	5%	8K2 Ω	
R2360	ERDS1TJ101	CARBON	0.5W	5%	100 Ω	
R2361	ERJ6GEYJ472	S.M.CARB	0.1W	5%	4K7 Ω	
R2362	ERJ6GEYJ472	S.M.CARB	0.1W	5%	4K7 Ω	
R2363	ERJ6GEYJ101	S.M.CARB	0.1W	5%	100 Ω	
R2364	ERJ6GEYJ274	S.M.CARB	0.1W	5%	270K Ω	
R2365	ERG1SJ102	METAL	1W	5%	1K Ω	
R2366	ERJ6GEYJ333	S.M.CARB	0.1W	5%	33K Ω	
R2368	ERJ6GEYJ103	S.M.CARB	0.1W	5%	10K Ω	
R2369	ERX3FJS4R7	METAL	3W	5%	4R7 Ω	
R2371	ERJ6GEYJ223	S.M.CARB	0.1W	5%	22K Ω	
R2374	ERJ6GEYJ103	S.M.CARB	0.1W	5%	10K Ω	
R2375	ERJ6GEYJ183	S.M.CARB	0.1W	5%	18K Ω	
R2376	ERJ6GEYJ151	S.M.CARB	0.1W	5%	150 Ω	
R2377	ERG3FJ561H	METAL	2W	5%	560 Ω	
R2378	ERJ6GEYJ183	S.M.CARB	0.1W	5%	18K Ω	
R2383	ERJ6GEYJ332	S.M.CARB	0.1W	5%	3K3 Ω	
R2384	ERG3FJ471	METAL	3W	5%	470 Ω	⚠
R2385	ERJ6GEYJ752	S.M.CARB	0.1W	5%	7K5 Ω	
R2386	ERJ6GEYJ332	S.M.CARB	0.1W	5%	3K3 Ω	
R2387	ERJ6GEYJ332	S.M.CARB	0.1W	5%	3K3 Ω	
R2388	ERD25TJ101	CARBON	0.25W	5%	100 Ω	
R2389	ERJ6GEYJ393	S.M.CARB	0.1W	5%	39K Ω	
R2390	ERJ6GEYJ273	S.M.CARB	0.1W	5%	27K Ω	
R2391	ERJ6GEYJ822	S.M.CARB	0.1W	5%	8K2 Ω	
R2393	ERJ6GEYJ274	S.M.CARB	0.1W	5%	270K Ω	
R2395	ERJ6GEYJ333	S.M.CARB	0.1W	5%	33K Ω	
R2396	ERJ6GEYJ103	S.M.CARB	0.1W	5%	10K Ω	
R2398	ERJ6GEYJ332	S.M.CARB	0.1W	5%	3K3 Ω	
R2399	ERJ6GEY0R00	S.M.CARB	0.1W	5%	0 Ω	
R2400	ERJ6GEYJ103	S.M.CARB	0.1W	5%	10K Ω	
R2401	ERJ6GEYJ223	S.M.CARB	0.1W	5%	22K Ω	
R2402	ERJ6GEYJ472	S.M.CARB	0.1W	5%	4K7 Ω	
R2403	ERDS1TJ154	CARBON	0.5W	5%	150 Ω	
R2404	ERDS1TJ184	CARBON	0.5W	5%	180 Ω	
R2406	ERW12PKR33	WOUND	0.5W	10%	R33 Ω	⚠
R2407	ERD2FCVJ4R7P	CARBON	2W	5%	4R7 Ω	⚠
R2408	ERG2FJ101H	METAL	2W	5%	100 Ω	⚠
R2409	ERG2FJ101H	METAL	2W	5%	100 Ω	⚠
R2410	ERG5FJ473	METAL	5W	5%	47K Ω	⚠
R2410	ERJ6GEYJ822	S.M.CARB	0.1W	5%	8K2 Ω	
R2411	ERD2FCVJ4R7P	CARBON	2W	5%	4R7 Ω	⚠
R2411	ERJ6GEYJ103	S.M.CARB	0.1W	5%	10K Ω	
R2412	ERG5FJ390H	METAL	5W	5%	39 Ω	⚠
R2412	ERJ6GEYJ104	S.M.CARB	0.1W	5%	100K Ω	
R2413	ERQ2CJP2R4	METAL	2W	5%	2R4 Ω	⚠
R2414	ERG3FJ471	METAL	3W	5%	470 Ω	⚠
R2415	ERDS1TJ103	CARBON	0.5W	5%	10K Ω	
R2416	ERDS2TJ820T	CARBON	2W	5%	82 Ω	
R2417	ERD25TJ102	CARBON	0.25W	5%	1K Ω	
R2418	ERG3FJ471	METAL	3W	5%	470 Ω	⚠
R2421	ERJ6GEYJ183	S.M.CARB	0.1W	5%	18K Ω	
R2422	ERJ6GEYJ103	S.M.CARB	0.1W	5%	10K Ω	
R2423	ERJ6GEYJ471	S.M.CARB	0.1W	5%	470 Ω	
R2429	ERJ6GEYJ154	S.M.CARB	0.1W	5%	150K Ω	
R2431	ERJ6ENF3901	S.M.CARB	0.1W	1%	3K9 Ω	
R2432	ERJ6ENF3901	S.M.CARB	0.1W	1%	3K9 Ω	
R2433	ERJ6GEYJ103	S.M.CARB	0.1W	5%	10K Ω	
R2434	ERJ6GEYJ104	S.M.CARB	0.1W	5%	100K Ω	
R2435	ERJ6GEYJ104	S.M.CARB	0.1W	5%	100K Ω	
R2436	ERJ6GEYJ104	S.M.CARB	0.1W	5%	100K Ω	
R2437	ERJ6GEYJ471	S.M.CARB	0.1W	5%	470 Ω	

Cct Ref	Parts Number	Description				
R2438	ERJ6GEYJ471	S.M.CARB	0.1W	5%	470 Ω	
R2439	ERJ6GEYJ223	S.M.CARB	0.1W	5%	22K Ω	
R2440	ERJ6GEYJ471	S.M.CARB	0.1W	5%	470 Ω	
R2441	ERJ6GEYJ223	S.M.CARB	0.1W	5%	22K Ω	
R2442	ERJ6GEYJ223	S.M.CARB	0.1W	5%	22K Ω	
R2443	ERJ6GEYJ471	S.M.CARB	0.1W	5%	470 Ω	
R2444	ERJ6GEYJ223	S.M.CARB	0.1W	5%	22K Ω	
R2445	ERJ6GEYJ223	S.M.CARB	0.1W	5%	22K Ω	
R2446	ERJ6GEYJ182	S.M.CARB	0.1W	5%	1K8 Ω	
R2447	ERJ6GEYJ223	S.M.CARB	0.1W	5%	22K Ω	
R2448	ERJ6GEYJ182	S.M.CARB	0.1W	5%	1K8 Ω	
R2449	ERJ6GEYJ223	S.M.CARB	0.1W	5%	22K Ω	
R2450	ERJ6GEYJ182	S.M.CARB	0.1W	5%	1K8 Ω	
R2451	ERJ6GEYJ223	S.M.CARB	0.1W	5%	22K Ω	
R2452	ERJ6GEYJ182	S.M.CARB	0.1W	5%	1K8 Ω	
R2453	ERJ6GEY0R00	S.M.CARB	0.1W	5%	0 Ω	
R2454	ERJ6GEY0R00	S.M.CARB	0.1W	5%	0 Ω	
R2455	ERJ6GEY0R00	S.M.CARB	0.1W	5%	0 Ω	
R2456	ERJ6GEY0R00	S.M.CARB	0.1W	5%	0 Ω	
R2457	ERX12SJ1R0	METAL	0.5W	5%	1 Ω	⚠
R2458	ERX12SJ1R0	METAL	0.5W	5%	1 Ω	⚠
R2459	ERX12SJ1R0	METAL	0.5W	5%	1 Ω	⚠
R2460	ERX12SJ1R0	METAL	0.5W	5%	1 Ω	⚠
R2463	ERJ6GEYJ750	S.M.CARB	0.1W	5%	75 Ω	
R2464	ERJ6GEYJ432	S.M.CARB	0.1W	5%	4K3 Ω	
R2465	ERJ6GEYJ101	S.M.CARB	0.1W	5%	100 Ω	
R2466	ERJ6GEYJ154	S.M.CARB	0.1W	5%	150K Ω	
R2467	ERJ6GEYJ154	S.M.CARB	0.1W	5%	150K Ω	
R2468	ERJ6GEYJ101	S.M.CARB	0.1W	5%	100 Ω	
R2469	ERJ6GEYJ432	S.M.CARB	0.1W	5%	4K3 Ω	
R2470	ERJ6GEYJ393	S.M.CARB	0.1W	5%	39K Ω	
R2471	ERJ6GEYJ393	S.M.CARB	0.1W	5%	39K Ω	
R2472	ERJ6GEYJ222	S.M.CARB	0.1W	5%	2K2 Ω	
R2473	ERJ6GEYJ222	S.M.CARB	0.1W	5%	2K2 Ω	
R2474	ERJ6GEYJ101	S.M.CARB	0.1W	5%	100 Ω	
R2475	ERJ6GEYJ561	S.M.CARB	0.1W	5%	560 Ω	
R2476	ERJ6GEYJ561	S.M.CARB	0.1W	5%	560 Ω	
R2477	ERJ6GEYJ101	S.M.CARB	0.1W	5%	100 Ω	
R2478	ERJ6GEYJ154	S.M.CARB	0.1W	5%	150K Ω	
R2479	ERJ6GEY0R00	S.M.CARB	0.1W	5%	0 Ω	
R2480	ERJ6GEY0R00	S.M.CARB	0.1W	5%	0 Ω	
R2481	ERJ6GEYJ473	S.M.CARB	0.1W	5%	47K Ω	
R2482	ERJ6GEYJ472	S.M.CARB	0.1W	5%	4K7 Ω	
R2483	ERJ6GEYJ822	S.M.CARB	0.1W	5%	8K2 Ω	
R2484	ERJ6GEYJ562	S.M.CARB	0.1W	5%	5K6 Ω	
R2485	ERJ6GEYJ562	S.M.CARB	0.1W	5%	5K6 Ω	
R2486	ERJ6GEYJ822	S.M.CARB	0.1W	5%	8K2 Ω	
R2487	ERJ6GEYJ102	S.M.CARB	0.1W	5%	1K Ω	
R2489	ERJ6GEYJ183	S.M.CARB	0.1W	5%	18K Ω	
R2490	ERJ6GEYJ104	S.M.CARB	0.1W	5%	100K Ω	
R2491	ERJ6GEYJ123	S.M.CARB	0.1W	5%	12K Ω	
R2492	ERJ6GEYJ104	S.M.CARB	0.1W	5%	100K Ω	
R2493	ERJ6GEYJ822	S.M.CARB	0.1W	5%	8K2 Ω	
R2494	ERJ6GEYJ223	S.M.CARB	0.1W	5%	22K Ω	
R2495	ERJ6GEYJ223	S.M.CARB	0.1W	5%	22K Ω	
R2496	ERJ6GEYJ223	S.M.CARB	0.1W	5%	22K Ω	
R2497	ERJ6GEYJ223	S.M.CARB	0.1W	5%	22K Ω	
R2498	ERJ6GEY0R00	S.M.CARB	0.1W	5%	0 Ω	
R2499	ERJ6GEYJ103	S.M.CARB	0.1W	5%	10K Ω	
R2501	ERJ6GEYJ103	S.M.CARB	0.1W	5%	10K Ω	
R2502	ERJ6GEYJ683	S.M.CARB	0.1W	5%	68K Ω	
R2503	ERJ6GEYJ103	S.M.CARB	0.1W	5%	10K Ω	
R2504	ERJ6GEYJ103	S.M.CARB	0.1W	5%	10K Ω	
R2505	ERJ6GEYJ103	S.M.CARB	0.1W	5%	10K Ω	
R2506	ERJ6GEYJ471	S.M.CARB	0.1W	5%	470 Ω	
R2507	ERJ6GEYJ103	S.M.CARB	0.1W	5%	10K Ω	

Cct Ref	Parts Number	Description			
R2508	ERJ6GEYJ103	S.M.CARB	0.1W	5%	10K Ω
R2509	ERJ6GEYJ103	S.M.CARB	0.1W	5%	10K Ω
R2510	ERJ6GEYJ103	S.M.CARB	0.1W	5%	10K Ω
R2511	ERJ6GEYJ103	S.M.CARB	0.1W	5%	10K Ω
R2512	ERJ6GEYJ472	S.M.CARB	0.1W	5%	4K7 Ω
R2513	ERJ6GEYJ472	S.M.CARB	0.1W	5%	4K7 Ω
R2514	ERJ6GEYJ472	S.M.CARB	0.1W	5%	4K7 Ω
R2515	ERJ6GEYJ103	S.M.CARB	0.1W	5%	10K Ω
R2516	ERJ6GEYJ103	S.M.CARB	0.1W	5%	10K Ω
R2517	ERJ6GEYJ151	S.M.CARB	0.1W	5%	150 Ω
R2518	ERJ6GEYJ472	S.M.CARB	0.1W	5%	4K7 Ω
R2519	ERJ6GEYJ472	S.M.CARB	0.1W	5%	4K7 Ω
R2520	ERJ6GEYJ103	S.M.CARB	0.1W	5%	10K Ω
R2521	ERJ6GEYJ330	S.M.CARB	0.1W	5%	33 Ω
R2522	ERJ6GEYJ103	S.M.CARB	0.1W	5%	10K Ω
R2523	ERJ6GEYJ472	S.M.CARB	0.1W	5%	4K7 Ω
R2524	ERJ6GEYJ472	S.M.CARB	0.1W	5%	4K7 Ω
R2525	ERJ6GEYJ105	S.M.CARB	0.1W	5%	1M Ω
R2526	ERJ6GEYJ470	S.M.CARB	0.1W	5%	47 Ω
R2527	ERJ6GEYJ470	S.M.CARB	0.1W	5%	47 Ω
R2528	ERJ6GEYJ333	S.M.CARB	0.1W	5%	33K Ω
R2529	ERJ6GEYJ333	S.M.CARB	0.1W	5%	33K Ω
R2530	ERJ6GEYJ393	S.M.CARB	0.1W	5%	39K Ω
R2531	ERJ6GEYJ393	S.M.CARB	0.1W	5%	39K Ω
R2532	ERJ6GEYJ473	S.M.CARB	0.1W	5%	47K Ω
R2533	ERJ6GEYJ333	S.M.CARB	0.1W	5%	33K Ω
R2534	ERJ6GEYJ153	S.M.CARB	0.1W	5%	15K Ω
R2535	ERJ6GEYJ472	S.M.CARB	0.1W	5%	4K7 Ω
R2536	ERJ6GEYJ101	S.M.CARB	0.1W	5%	100 Ω
R2537	ERJ6GEYJ563	S.M.CARB	0.1W	5%	56K Ω
R2538	ERJ6GEYJ124	S.M.CARB	0.1W	5%	120K Ω
R2539	ERJ6GEYJ104	S.M.CARB	0.1W	5%	100K Ω
R2540	ERJ6GEYJ563	S.M.CARB	0.1W	5%	56K Ω
R2541	ERJ6GEYJ124	S.M.CARB	0.1W	5%	120K Ω
R2542	ERJ6GEYJ104	S.M.CARB	0.1W	5%	100K Ω
R2543	ERJ6GEYJ562	S.M.CARB	0.1W	5%	5K6 Ω
R2544	ERJ6GEYJ562	S.M.CARB	0.1W	5%	5K6 Ω
R2545	ERJ6GEYJ101	S.M.CARB	0.1W	5%	100 Ω
R2546	ERJ6GEYJ151	S.M.CARB	0.1W	5%	150 Ω
R2547	ERJ6GEYJ472	S.M.CARB	0.1W	5%	4K7 Ω
R2548	ERJ6GEYJ562	S.M.CARB	0.1W	5%	5K6 Ω
R2549	ERJ6GEYJ102	S.M.CARB	0.1W	5%	1K Ω
R2550	ERJ6GEYJ821	S.M.CARB	0.1W	5%	820 Ω
R2551	ERJ6GEYJ103	S.M.CARB	0.1W	5%	10K Ω
R2552	ERJ6GEYJ821	S.M.CARB	0.1W	5%	820 Ω
R2553	ERJ6GEYJ103	S.M.CARB	0.1W	5%	10K Ω
R2554	ERJ6GEYJ821	S.M.CARB	0.1W	5%	820 Ω
R2555	ERJ6GEYJ103	S.M.CARB	0.1W	5%	10K Ω
R2556	ERJ6GEYJ821	S.M.CARB	0.1W	5%	820 Ω
R2557	ERJ6GEYJ103	S.M.CARB	0.1W	5%	10K Ω
R2558	ERJ6GEYJ821	S.M.CARB	0.1W	5%	820 Ω
R2559	ERJ6GEYJ103	S.M.CARB	0.1W	5%	10K Ω
R2560	ERJ6GEYJ821	S.M.CARB	0.1W	5%	820 Ω
R2561	ERJ6GEYJ103	S.M.CARB	0.1W	5%	10K Ω
R2562	ERJ6GEY0R00	S.M.CARB	0.1W	5%	0 Ω
R2563	ERJ6GEYJ151	S.M.CARB	0.1W	5%	150 Ω
R2564	ERJ6GEY0R00	S.M.CARB	0.1W	5%	0 Ω
R2565	ERJ6GEY0R00	S.M.CARB	0.1W	5%	0 Ω
R2567	ERJ6GEY0R00	S.M.CARB	0.1W	5%	0 Ω
R2568	ERJ6GEY0R00	S.M.CARB	0.1W	5%	0 Ω
R2569	ERJ6GEY0R00	S.M.CARB	0.1W	5%	0 Ω
R2570	ERJ6GEY0R00	S.M.CARB	0.1W	5%	0 Ω
R2571	ERJ6GEY0R00	S.M.CARB	0.1W	5%	0 Ω
R2572	ERJ6GEY0R00	S.M.CARB	0.1W	5%	0 Ω
R2573	ERJ6GEY0R00	S.M.CARB	0.1W	5%	0 Ω
R2574	ERJ6GEYJ561	S.M.CARB	0.1W	5%	560 Ω

Cct Ref	Parts Number	Description			
R2575	ERJ6GEYJ330	S.M.CARB	0.1W	5%	33 Ω
R2577	ERJ6GEYJ472	S.M.CARB	0.1W	5%	4K7 Ω
R2578	ERJ6GEYJ472	S.M.CARB	0.1W	5%	4K7 Ω
R2579	ERJ6GEYJ472	S.M.CARB	0.1W	5%	4K7 Ω
R2580	ERJ6GEYJ472	S.M.CARB	0.1W	5%	4K7 Ω
R2581	ERJ6GEYJ470	S.M.CARB	0.1W	5%	47 Ω
R2582	ERJ6GEYJ470	S.M.CARB	0.1W	5%	47 Ω
R2583	ERJ6GEYJ333	S.M.CARB	0.1W	5%	33K Ω
R2584	ERJ6GEYJ470	S.M.CARB	0.1W	5%	47 Ω
R2585	ERJ6GEYJ103	S.M.CARB	0.1W	5%	10K Ω
R2586	ERJ6GEYJ330	S.M.CARB	0.1W	5%	33 Ω
R2587	ERJ6GEYJ561	S.M.CARB	0.1W	5%	560 Ω
R2588	ERJ6GEYJ103	S.M.CARB	0.1W	5%	10K Ω
R2589	ERJ6GEYJ561	S.M.CARB	0.1W	5%	560 Ω
R2590	ERJ6GEYJ151	S.M.CARB	0.1W	5%	150 Ω
R2591	ERJ6GEY0R00	S.M.CARB	0.1W	5%	0 Ω
R2592	ERJ6GEY0R00	S.M.CARB	0.1W	5%	0 Ω
R2593	ERJ6GEYJ153	S.M.CARB	0.1W	5%	15K Ω
R2594	ERJ6GEYJ153	S.M.CARB	0.1W	5%	15K Ω
R2595	ERJ6GEYJ151	S.M.CARB	0.1W	5%	150 Ω
R2596	ERJ6GEYJ153	S.M.CARB	0.1W	5%	15K Ω
R2598	ERJ6GEYJ103	S.M.CARB	0.1W	5%	10K Ω
R2599	ERJ6GEYJ103	S.M.CARB	0.1W	5%	10K Ω
R2601	ERJ6GEYJ101	S.M.CARB	0.1W	5%	100 Ω
R2602	ERJ6GEYJ103	S.M.CARB	0.1W	5%	10K Ω
R2604	ERJ6GEYJ101	S.M.CARB	0.1W	5%	100 Ω
R2606	ERJ6GEYJ103	S.M.CARB	0.1W	5%	10K Ω
R2607	ERJ6GEYJ103	S.M.CARB	0.1W	5%	10K Ω
R2608	ERJ6GEYJ223	S.M.CARB	0.1W	5%	22K Ω
R2609	ERJ6GEYJ103	S.M.CARB	0.1W	5%	10K Ω
R2610	ERJ6GEYJ103	S.M.CARB	0.1W	5%	10K Ω
R2611	ERJ6GEYJ223	S.M.CARB	0.1W	5%	22K Ω
R2612	ERJ6GEYJ183	S.M.CARB	0.1W	5%	18K Ω
R2613	ERJ6GEYJ183	S.M.CARB	0.1W	5%	18K Ω
R2614	ERJ6GEYJ183	S.M.CARB	0.1W	5%	18K Ω
R2615	ERJ6GEYJ183	S.M.CARB	0.1W	5%	18K Ω
R2616	ERJ6GEYJ183	S.M.CARB	0.1W	5%	18K Ω
R2617	ERJ6GEYJ183	S.M.CARB	0.1W	5%	18K Ω
R2618	ERJ6GEYJ153	S.M.CARB	0.1W	5%	15K Ω
R2619	ERJ6GEYJ153	S.M.CARB	0.1W	5%	15K Ω
R2620	ERJ6GEYJ334	S.M.CARB	0.1W	5%	330K Ω
R2621	ERJ6GEYJ105	S.M.CARB	0.1W	5%	1M Ω
R2622	ERJ6GEYJ104	S.M.CARB	0.1W	5%	100K Ω
R2623	ERJ6GEYJ334	S.M.CARB	0.1W	5%	330K Ω
R2624	ERJ6GEYJ105	S.M.CARB	0.1W	5%	1M Ω
R2625	ERJ6GEYJ104	S.M.CARB	0.1W	5%	100K Ω
R2626	ERJ6GEYJ334	S.M.CARB	0.1W	5%	330K Ω
R2627	ERJ6GEYJ105	S.M.CARB	0.1W	5%	1M Ω
R2628	ERJ6GEYJ104	S.M.CARB	0.1W	5%	100K Ω
R2629	ERJ6GEYJ334	S.M.CARB	0.1W	5%	330K Ω
R2630	ERJ6GEYJ105	S.M.CARB	0.1W	5%	1M Ω
R2631	ERJ6GEYJ104	S.M.CARB	0.1W	5%	100K Ω
R2632	ERJ6GEYJ103	S.M.CARB	0.1W	5%	10K Ω
R2633	ERJ6GEYJ224	S.M.CARB	0.1W	5%	220K Ω
R2637	ERJ6GEY0R00	S.M.CARB	0.1W	5%	0 Ω
R2638	ERJ6GEYJ102	S.M.CARB	0.1W	5%	1K Ω
R2639	ERJ6GEYJ472	S.M.CARB	0.1W	5%	4K7 Ω
R2640	ERJ6GEYJ122	S.M.CARB	0.1W	5%	1K2 Ω
R2641	ERJ6GEYJ122	S.M.CARB	0.1W	5%	1K2 Ω
R2642	ERJ6GEYJ472	S.M.CARB	0.1W	5%	4K7 Ω
R2643	ERJ6GEYJ102	S.M.CARB	0.1W	5%	1K Ω
R2644	ERJ6GEYJ562	S.M.CARB	0.1W	5%	5K6 Ω
R2646	ERJ6GEYJ562	S.M.CARB	0.1W	5%	5K6 Ω
R2648	ERJ6GEYJ102	S.M.CARB	0.1W	5%	1K Ω
R2649	ERJ6GEYJ472	S.M.CARB	0.1W	5%	4K7 Ω
R2650	ERJ6GEYJ122	S.M.CARB	0.1W	5%	1K2 Ω

Cct Ref	Parts Number	Description			
R2651	ERJ6GEYJ122	S.M.CARB	0.1W	5%	1K2 Ω
R2652	ERJ6GEYJ472	S.M.CARB	0.1W	5%	4K7 Ω
R2653	ERJ6GEYJ102	S.M.CARB	0.1W	5%	1K Ω
R2654	ERJ6GEYJ122	S.M.CARB	0.1W	5%	1K2 Ω
R2655	ERJ6GEYJ472	S.M.CARB	0.1W	5%	4K7 Ω
R2656	ERJ6GEYJ102	S.M.CARB	0.1W	5%	1K Ω
R2657	ERJ6GEYJ102	S.M.CARB	0.1W	5%	1K Ω
R2658	ERJ6GEYJ472	S.M.CARB	0.1W	5%	4K7 Ω
R2659	ERJ6GEYJ122	S.M.CARB	0.1W	5%	1K2 Ω
R2666	ERJ6GEYJ473	S.M.CARB	0.1W	5%	47K Ω
R2667	ERJ6GEYJ473	S.M.CARB	0.1W	5%	47K Ω
R2668	ERJ6GEYJ473	S.M.CARB	0.1W	5%	47K Ω
R2669	ERJ6GEYJ473	S.M.CARB	0.1W	5%	47K Ω
R2672	ERJ6GEYJ473	S.M.CARB	0.1W	5%	47K Ω
R2673	ERJ6GEYJ473	S.M.CARB	0.1W	5%	47K Ω
R2674	ERJ6GEYJ473	S.M.CARB	0.1W	5%	47K Ω
R2675	ERJ6GEYJ473	S.M.CARB	0.1W	5%	47K Ω
R2678	ERJ6GEYJ562	S.M.CARB	0.1W	5%	5K6 Ω
R2679	ERJ6GEYJ562	S.M.CARB	0.1W	5%	5K6 Ω
R2681	ERJ6GEYJ473	S.M.CARB	0.1W	5%	47K Ω
R2683	ERJ6GEYJ473	S.M.CARB	0.1W	5%	47K Ω
R2684	ERJ6GEYJ473	S.M.CARB	0.1W	5%	47K Ω
R2685	ERJ6GEYJ473	S.M.CARB	0.1W	5%	47K Ω
R2686	ERJ6GEYJ101	S.M.CARB	0.1W	5%	100 Ω
R2687	ERJ6GEYJ101	S.M.CARB	0.1W	5%	100 Ω
R2688	ERJ6GEYJ101	S.M.CARB	0.1W	5%	100 Ω
R2689	ERJ6GEYJ101	S.M.CARB	0.1W	5%	100 Ω
R2690	ERJ6GEYJ101	S.M.CARB	0.1W	5%	100 Ω
R2691	ERJ6GEYJ101	S.M.CARB	0.1W	5%	100 Ω
R2692	ERJ6GEYJ101	S.M.CARB	0.1W	5%	100 Ω
R2717	ERJ6GEYJ104	S.M.CARB	0.1W	5%	100K Ω
R2718	ERJ6GEYJ103	S.M.CARB	0.1W	5%	10K Ω
R2719	ERJ6GEY0R00	S.M.CARB	0.1W	5%	0 Ω
R2720	ERJ6GEYJ103	S.M.CARB	0.1W	5%	10K Ω
R2723	ERJ6GEYJ332	S.M.CARB	0.1W	5%	3K3 Ω
R2724	ERJ6GEYJ103	S.M.CARB	0.1W	5%	10K Ω
R2725	ERJ6ENF1301	S.M.CARB	0.1W	1%	1K3 Ω
R2726	ERJ6ENF4121	S.M.CARB	0.1W	1%	4K12 Ω
R2727	ERJ6ENF2151	S.M.CARB	0.1W	1%	2K15 Ω
R2728	ERJ6ENF1201	S.M.CARB	0.1W	1%	1K2 Ω
R2731	ERJ6ENF2151	S.M.CARB	0.1W	1%	2K15 Ω
R2732	ERJ6ENF1201	S.M.CARB	0.1W	1%	1K2 Ω
R3001	ERJ8GEYJ680	S.M.CARB	.125W	5%	68 Ω
R3002	ERJ6GEYJ102	S.M.CARB	0.1W	5%	1K Ω
R3003	ERJ6GEYJ221	S.M.CARB	0.1W	5%	220 Ω
R3004	ERJ8GEYJ680	S.M.CARB	.125W	5%	68 Ω
R3005	ERJ6GEYJ103	S.M.CARB	0.1W	5%	10K Ω
R3006	ERJ8GEYJ680	S.M.CARB	.125W	5%	68 Ω
R3007	ERJ8GEYJ680	S.M.CARB	.125W	5%	68 Ω
R3008	ERJ6GEYJ102	S.M.CARB	0.1W	5%	1K Ω
R3009	ERJ6GEYJ332	S.M.CARB	0.1W	5%	3K3 Ω
R3010	ERJ6GEYJ221	S.M.CARB	0.1W	5%	220 Ω
R3012	ERJ6GEYJ221	S.M.CARB	0.1W	5%	220 Ω
R3013	ERJ6GEYJ221	S.M.CARB	0.1W	5%	220 Ω
R3014	ERJ8ENF75R0	S.M.CARB	0.1W	1%	75 Ω
R3015	ERJ6GEYJ184	S.M.CARB	0.1W	5%	180K Ω
R3017	ERJ6GEYJ221	S.M.CARB	0.1W	5%	220 Ω
R3018	ERJ6GEYJ221	S.M.CARB	0.1W	5%	220 Ω
R3019	ERJ6GEYJ221	S.M.CARB	0.1W	5%	220 Ω
R3020	ERJ6GEYJ221	S.M.CARB	0.1W	5%	220 Ω
R3021	ERJ6GEYJ184	S.M.CARB	0.1W	5%	180K Ω
R3022	ERJ6GEYJ221	S.M.CARB	0.1W	5%	220 Ω
R3023	ERJ6GEYJ221	S.M.CARB	0.1W	5%	220 Ω
R3025	ERJ6GEYJ221	S.M.CARB	0.1W	5%	220 Ω
R3026	ERJ6GEYJ221	S.M.CARB	0.1W	5%	220 Ω
R3027	ERJ6GEYJ221	S.M.CARB	0.1W	5%	220 Ω

Cct Ref	Parts Number	Description			
R3028	ERJ8ENF75R0	S.M.CARB	0.1W	1%	75 Ω
R3029	ERJ6GEY0R00	S.M.CARB	0.1W	5%	0 Ω
R3030	ERJ6GEY0R00	S.M.CARB	0.1W	5%	0 Ω
R3031	ERJ6GEYJ683	S.M.CARB	0.1W	5%	68K Ω
R3034	ERJ6GEYJ221	S.M.CARB	0.1W	5%	220 Ω
R3035	ERJ6GEYJ102	S.M.CARB	0.1W	5%	1K Ω
R3036	ERJ6GEYJ102	S.M.CARB	0.1W	5%	1K Ω
R3037	ERJ3GEYJ103	S.M.CARB	0.1W	5%	10K Ω
R3044	ERJ6GEYJ331	S.M.CARB	0.1W	5%	330 Ω
R3049	ERJ6ENF5600	S.M.CARB	0.1W	1%	560 Ω
R3050	ERJ6ENF5600	S.M.CARB	0.1W	1%	560 Ω
R3051	ERJ6GEYJ561	S.M.CARB	0.1W	5%	560 Ω
R3053	ERJ6GEYJ221	S.M.CARB	0.1W	5%	220 Ω
R3054	ERJ6GEYJ331	S.M.CARB	0.1W	5%	330 Ω
R3059	ERJ6GEYJ561	S.M.CARB	0.1W	5%	560 Ω
R3062	ERJ6GEYJ331	S.M.CARB	0.1W	5%	330 Ω
R3064	ERJ6GEY0R00	S.M.CARB	0.1W	5%	0 Ω
R3066	ERJ6GEY0R00	S.M.CARB	0.1W	5%	0 Ω
R3069	ERJ6GEY0R00	S.M.CARB	0.1W	5%	0 Ω
R3071	ERJ6GEYJ221	S.M.CARB	0.1W	5%	220 Ω
R3073	ERJ6GEYJ331	S.M.CARB	0.1W	5%	330 Ω
R3074	ERJ6GEYJ101	S.M.CARB	0.1W	5%	100 Ω
R3076	ERJ6GEYJ102	S.M.CARB	0.1W	5%	1K Ω
R3077	ERJ6GEYJ562	S.M.CARB	0.1W	5%	5K6 Ω
R3078	ERJ6GEYJ562	S.M.CARB	0.1W	5%	5K6 Ω
R3079	ERJ6GEYJ562	S.M.CARB	0.1W	5%	5K6 Ω
R3084	ERJ6GEYJ562	S.M.CARB	0.1W	5%	5K6 Ω
R3085	ERJ6GEYJ562	S.M.CARB	0.1W	5%	5K6 Ω
R3086	ERJ6GEYJ562	S.M.CARB	0.1W	5%	5K6 Ω
R3087	ERJ6GEYJ562	S.M.CARB	0.1W	5%	5K6 Ω
R3088	ERJ6GEYJ562	S.M.CARB	0.1W	5%	5K6 Ω
R3089	ERJ6GEYJ562	S.M.CARB	0.1W	5%	5K6 Ω
R3090	ERJ6GEYJ562	S.M.CARB	0.1W	5%	5K6 Ω
R3116	ERD25TJ103	CARBON	0.25W	5%	10K Ω
R3122	ERJ6GEYJ683	S.M.CARB	0.1W	5%	68K Ω
R3123	ERJ6GEYJ223	S.M.CARB	0.1W	5%	22K Ω
R3124	ERJ6GEYJ681	S.M.CARB	0.1W	5%	680 Ω
R3125	ERJ6GEYJ101	S.M.CARB	0.1W	5%	100 Ω
R3126	ERJ6GEYJ121	S.M.CARB	0.1W	5%	120 Ω
R3127	ERJ6GEYJ390	S.M.CARB	0.1W	5%	39 Ω
R3128	ERJ6GEYJ331	S.M.CARB	0.1W	5%	330 Ω
R3129	ERJ6GEYJ561	S.M.CARB	0.1W	5%	560 Ω
R3130	ERJ6GEYJ561	S.M.CARB	0.1W	5%	560 Ω
R3326	ERJ6ENF2202	S.M.CARB	0.1W	1%	22K Ω
R3401	ERJ6GEYJ101	S.M.CARB	0.1W	5%	100 Ω
R3402	ERJ6GEYJ473	S.M.CARB	0.1W	5%	47K Ω
R3403	ERJ6GEYJ101	S.M.CARB	0.1W	5%	100 Ω
R3404	ERJ6GEYJ473	S.M.CARB	0.1W	5%	47K Ω
R3405	ERJ6GEYJ102	S.M.CARB	0.1W	5%	1K Ω
R3406	ERJ6GEYJ102	S.M.CARB	0.1W	5%	1K Ω
R3407	ERJ6GEYJ333	S.M.CARB	0.1W	5%	33K Ω
R3408	ERJ6GEYJ333	S.M.CARB	0.1W	5%	33K Ω
R3409	ERJ6GEYJ101	S.M.CARB	0.1W	5%	100 Ω
R3410	ERJ6GEYJ101	S.M.CARB	0.1W	5%	100 Ω
R3411	ERJ8ENF75R0	S.M.CARB	0.1W	1%	75 Ω
R3412	ERJ6GEYJ223	S.M.CARB	0.1W	5%	22K Ω
R3413	ERJ6GEYJ101	S.M.CARB	0.1W	5%	100 Ω
R3414	ERJ8ENF75R0	S.M.CARB	0.1W	1%	75 Ω
R3415	ERJ6GEYJ101	S.M.CARB	0.1W	5%	100 Ω
R3416	ERJ8ENF75R0	S.M.CARB	0.1W	1%	75 Ω
R3417	ERJ6GEYJ750	S.M.CARB	0.1W	5%	75 Ω
R3418	ERJ8ENF75R0	S.M.CARB	0.1W	1%	75 Ω
R3419	ERJ6GEYJ102	S.M.CARB	0.1W	5%	1K Ω
R3420	ERJ6GEYJ102	S.M.CARB	0.1W	5%	1K Ω
R3421	ERJ6GEYJ333	S.M.CARB	0.1W	5%	33K Ω
R3422	ERJ6GEYJ333	S.M.CARB	0.1W	5%	33K Ω

Cct Ref	Parts Number	Description			
R3423	ERJ6GEYJ101	S.M.CARB	0.1W	5%	100 Ω
R3424	ERJ6GEYJ101	S.M.CARB	0.1W	5%	100 Ω
R3425	ERJ8ENF75R0	S.M.CARB	0.1W	1%	75 Ω
R3426	ERJ6GEYJ223	S.M.CARB	0.1W	5%	22K Ω
R3427	ERJ6GEYJ101	S.M.CARB	0.1W	5%	100 Ω
R3428	ERJ8ENF75R0	S.M.CARB	0.1W	1%	75 Ω
R3429	ERJ8ENF75R0	S.M.CARB	0.1W	1%	75 Ω
R3430	ERJ6GEYJ750	S.M.CARB	0.1W	5%	75 Ω
R3431	ERJ8ENF75R0	S.M.CARB	0.1W	1%	75 Ω
R3432	ERJ6GEYJ102	S.M.CARB	0.1W	5%	1K Ω
R3433	ERJ6GEYJ102	S.M.CARB	0.1W	5%	1K Ω
R3434	ERJ6GEYJ333	S.M.CARB	0.1W	5%	33K Ω
R3435	ERJ6GEYJ333	S.M.CARB	0.1W	5%	33K Ω
R3436	ERJ6GEYJ101	S.M.CARB	0.1W	5%	100 Ω
R3437	ERJ6GEYJ101	S.M.CARB	0.1W	5%	100 Ω
R3438	ERJ6GEYJ223	S.M.CARB	0.1W	5%	22K Ω
R3439	ERJ6GEYJ750	S.M.CARB	0.1W	5%	75 Ω
R3440	ERJ8ENF75R0	S.M.CARB	0.1W	1%	75 Ω
R3441	ERJ6GEYJ123	S.M.CARB	0.1W	5%	12K Ω
R3442	ERJ6GEYJ123	S.M.CARB	0.1W	5%	12K Ω
R3443	ERJ6GEYJ123	S.M.CARB	0.1W	5%	12K Ω
R3444	ERJ6GEYJ101	S.M.CARB	0.1W	5%	100 Ω
R3445	ERJ6GEYJ473	S.M.CARB	0.1W	5%	47K Ω
R3446	ERJ6GEYJ101	S.M.CARB	0.1W	5%	100 Ω
R3447	ERJ6GEYJ473	S.M.CARB	0.1W	5%	47K Ω
R3448	ERJ6GEYJ101	S.M.CARB	0.1W	5%	100 Ω
R3449	ERJ6GEYJ473	S.M.CARB	0.1W	5%	47K Ω
R3450	ERJ6GEYJ101	S.M.CARB	0.1W	5%	100 Ω
R3451	ERJ6GEYJ184	S.M.CARB	0.1W	5%	180K Ω
R3455	ERJ6GEYJ104	S.M.CARB	0.1W	5%	100K Ω
R3456	ERJ6GEYJ331	S.M.CARB	0.1W	5%	330 Ω
R3457	ERJ6GEYJ750	S.M.CARB	0.1W	5%	75 Ω
R3458	ERJ8GEYJ331	S.M.CARB	.125W	5%	330 Ω
R3481	ERJ6GEYJ221	S.M.CARB	0.1W	5%	220 Ω
R3482	ERJ6GEYJ221	S.M.CARB	0.1W	5%	220 Ω
R3483	ERJ8GEY0R00	S.M.CARB	.125W	5%	0 Ω
R3486	ERJ6GEYJ101	S.M.CARB	0.1W	5%	100 Ω
R3832	ERJ6GEYJ473	S.M.CARB	0.1W	5%	47K Ω
R3835	ERJ6GEYJ473	S.M.CARB	0.1W	5%	47K Ω
R3836	ERJ6GEYJ103	S.M.CARB	0.1W	5%	10K Ω
R3841	ERJ6GEYJ103	S.M.CARB	0.1W	5%	10K Ω
R4801	ERJ6ENF2701	S.M.CARB	0.1W	1%	27 Ω
R4802	ERJ6ENF1331	S.M.CARB	0.1W	1%	330 Ω
R4803	ERJ6ENF3320	S.M.CARB	0.1W	1%	3K3 Ω
R4804	ERJ6ENF1001	S.M.CARB	0.1W	1%	1K Ω
R4805	ERJ6ENF2213	S.M.CARB	0.1W	1%	221K Ω
R4806	ERJ6ENF6651	S.M.CARB	0.1W	1%	6K65 Ω
R4807	ERJ6ENF9091	S.M.CARB	0.1W	1%	9K09 Ω
R4808	ERJ6ENF3832	S.M.CARB	0.1W	1%	38K3 Ω
R4809	ERJ6ENF5621	S.M.CARB	0.1W	1%	5K62 Ω
R4810	ERJ6ENF4701	S.M.CARB	0.1W	1%	4K7 Ω
R4811	ERX2SJS6R8H	METAL	2W	5%	6.8 Ω

CAPACITORS

C001	ECJ2VF1C104Z	CERAMIC	16V	100nF
C002	ECA1CM470GB	ELECT	16V	47µF
C003	ECJ2VF1C104Z	CERAMIC	16V	100nF
C008	ECJ2VB1H103K	CERAMIC	50V	10nF
C012	ECJ2VF1H104Z	CERAMIC	50V	100nF
C013	ECA0JM102GB	ELECT	6.3V	1000µF
C014	ECJ2VF1C104Z	CERAMIC	16V	100nF
C017	ECJ2VF1C104Z	CERAMIC	16V	100nF
C018	ECJ2VF1C104Z	CERAMIC	16V	100nF
C020	ECJ2VF1C104Z	CERAMIC	16V	100nF
C026	ECJ2VF1H103Z	CERAMIC	50V	10nF
C051	ECEA1HN010UB	ELECT	50V	1µF
C052	ECJ2VF1C104Z	CERAMIC	16V	100nF

Cct Ref	Parts Number	Description			
C057	ECJ2VF1C104Z	CERAMIC	16V	100nF	
C062	ECJ2VF1C104Z	CERAMIC	16V	100nF	
C063	ECJ2VF1C104Z	CERAMIC	16V	100nF	
C064	ECA1HM100GB	ELECT	50V	10µF	
C068	ECJ2VF1C104Z	CERAMIC	16V	100nF	
C069	ECA1HM101GB	ELECT	50V	100µF	
C070	ECJ2VF1H104Z	CERAMIC	50V	100nF	
C071	ECJ2VF1C104Z	CERAMIC	16V	100nF	
C352	ECJ2VB1H103K	CERAMIC	50V	10nF	
C354	ECJ2VB1H223K	CERAMIC	50V	22nF	
C355	ECQM2104KZ	FILM	250V	100nF	
C356	ECJ2VC1H180J	CERAMIC	50V	18pF	
C357	ECKC2H122J	CERAMIC	500V	1.2µF	
C359	ECJ2VF1C104Z	CERAMIC	16V	100nF	
C360	ECA1CM471GB	ELECT	16V	470µF	
C361	ECJ2VB1H103K	CERAMIC	50V	10nF	
C363	ECJ2VB1H223K	CERAMIC	50V	22nF	
C364	ECJ2VC1H270J	CERAMIC	50V	27pF	
C365	ECQM2104KZ	FILM	250V	100nF	
C366	ECKC2H122J	CERAMIC	500V	1.2µF	
C371	ECJ2VB1H103K	CERAMIC	50V	10nF	
C373	ECJ2VB1H103K	CERAMIC	50V	10nF	
C374	ECJ2VC1H070D	CERAMIC	50V	7pF	
C375	ECQM2104KZ	FILM	250V	100nF	
C376	ECKC2H122J	CERAMIC	500V	1.2µF	
C377	ECA2EM100B	ELECT	250V	10µF	
C380	ECEA1HU101	ELECT	50V	100µF	
C382	ECA1CM221GB	ELECT	16V	220µF	
C383	ECA1CM222GB	ELECT	16V	2200µF	
C388	ECJ2VB1H183K	CERAMIC	50V	18nF	
C390	ECA1HM100GB	ELECT	50V	10µF	
C391	ECKC3D332J	CERAMIC	2KV	3.3µF	
C451	ECA1VM470B	ELECT	35V	47µF	
C452	ECEA1HU471	ELECT	50V	470µF	
C455	ECEA1CN220	ELECT	16V	22µF	
C457	ECA1VHG102B	ELECT	35V	1pF	
C459	ECA1HM100GB	ELECT	50V	10µF	
C460	ECQB1224KFW	FILM	100V	220nF	
C462	ECQV1H104J	FILM	50V	100nF	
C463	ECJ2VF1H103Z	CERAMIC	50V	10nF	
C475	ECJ2VC1H220J	CERAMIC	50V	22pF	
C476	ECHS1H102FZ3	FILM	100V	100nF	
C482	ECA1CM102B	ELECT	16V	1000µF	
C490	ECJ2VF1H103Z	CERAMIC	50V	10nF	
C504	ECA1VM101GB	ELECT	35V	100µF	
C505	ECQV1H104J	FILM	50V	100nF	
C508	ECA1EM102GB	ELECT	25V	100µF	
C510	ECJ2VF1C104Z	CERAMIC	16V	100nF	
C554	ECKW3D471JBN	CERAMIC	2KV	470pF	
C555	ECQP1223JZW	FILM	100V	22nF	
C556	ECWH20102JVY	FILM	200V	1µF	
C558	ECWH20472JVB	FILM	200V	4.7nF	
C559	ECQF4123JZH	FILM	400V	12nF	⚠
C560	ECEA2CNR47SB	ELECT	160V	0.47µF	
C561	ECWH20472JVB	FILM	200V	4.7nF	
C562	ECQM4223KC	FILM	400V	220nF	
C565	ECQE2155JFB	FILM	250V	1.5µF	
C569	ECA2EM330B	ELECT	250V	33µF	
C571	ECKC1H472J	CERAMIC	50V	4.7nF	
C573	ECKC2H103J	CERAMIC	500V	10nF	⚠
C576	ECKC3A182J	CERAMIC	1KV	1800pF	⚠
C578	ECWF4684JBB	FILM	400V	680nF	
C579	ECWF2394JBB	FILM	250V	0.39µF	
C580	ECWF4304JBP	FILM	400V	300nF	
C583	ECQB1H223K	FILM	50V	22nF	
C584	ECKC3D681J	CERAMIC	2KV	680pF	⚠

Cct Ref	Parts Number	Description			
C585	ECKC3D681J	CERAMIC	2KV	680pF	⚠
C591	ECA1HM100GB	ELECT	50V	10µF	
C705	ECQM2562JZB	FILM	200V	5.6µF	
C708	ECQE2334KF3	FILM	200V	330nF	
C709	ECQE1335KFB	FILM	100V	3.3µF	
C710	ECQE1335KFB	FILM	100V	3.3µF	
C711	ECQE1335KFB	FILM	100V	3.3µF	
C715	ECKC3D271J	CERAMIC	2KV	270pF	
C801	ECKRAE472ZE	CERAMIC	10V	4.7µF	
C802	ECKRAE472ZE	CERAMIC	10V	4.7µF	
C803	ECKRAE472ZE	CERAMIC	10V	4.7µF	
C804	ECKRAE472ZE	CERAMIC	10V	4.7µF	
C808	ECA1VHG221B	ELECT	35V	220µF	
C817	ECKC3D681J	CERAMIC	2KV	680pF	⚠
C819	ECKC2H471J	CERAMIC	500V	470pF	⚠
C820	ECOS2GP471DB	ELECT	200V	470µF	
C823	ECQF4123JZH	FILM	400V	12nF	⚠
C824	ECQE6823KFB	FILM	600V	82nF	
C828	ECKC3D152J	CERAMIC	2KV	1.5nF	⚠
C829	ECQB1H681JF3	FILM	50V	680pF	
C831	ECKCNA471MBB	CERAMIC	10V	4R7µF	⚠
C841	ECKRAE472ZE	CERAMIC	10V	4.7µF	
C843	ECQV1H104J	FILM	50V	100nF	
C844	ECKC3D392J	CERAMIC	2KV	3900pF	⚠
C845	ECKC1H101J	CERAMIC	50V	100pF	
C847	ECA2WM100E	ELECT	450V	10µF	
C851	ECQB1104JF3	FILM	100V	100nF	
C852	ECQB1104JF3	FILM	100V	100nF	
C853	ECEA1HU102	ELECT	50V	1000µF	
C854	ECKC2H561J	CERAMIC	500V	560pF	⚠
C855	ECQB1H103J	FILM	50V	10nF	
C858	ECKC3D182JB	CERAMIC	2KV	1.8nF	⚠
C861	ECA1EHG331B	ELECT	25V	330pF	
C862	ECA1EHG222B	ELECT	25V	2.2pF	
C864	ECA1EM222GB	ELECT	25V	2200µF	
C865	ECA1EM222GB	ELECT	25V	2200µF	
C866	ECOS2CA561BB	ELECT	160V	560µF	
C868	ECA160V33UB	ELECT	160V	33µF	
C869	ECA1EM472E	ELECT	50V	4.7pF	
C871	ECA1HHG100B	ELECT	50V	10µF	
C883	ECA1HM100GB	ELECT	50V	10µF	
C885	ECA1VM470B	ELECT	35V	47µF	
C888	ECA1CM471GB	ELECT	16V	470µF	
C889	ECA1CM222GB	ELECT	16V	2200µF	
C892	ECQU2A224MN	FILM	250V	220nF	⚠
C893	ECQU2A224MN	FILM	250V	220nF	⚠
C894	ECQU2A683MNB	FILM	100V	68nF	⚠
C895	ECKCNA152ME7	CERAMIC	10V	1.5µF	
C897	ECKCNA152ME7	CERAMIC	10V	1.5µF	
C898	ECQU2A224MN	FILM	250V	220nF	⚠
C899	ECQU2A224MN	FILM	250V	220nF	⚠
C901	EEANA1E100B	CERAMIC	25V	10µF	
C902	ECA1HM101GB	ELECT	50V	100µF	
C905	ECA1VM101GB	ELECT	35V	100µF	
C907	ECJ2VC1H151J	CERAMIC	50V	150pF	
C955	ECQB1103J	FILM	100V	10nF	
C958	ECA2CM100B	ELECT	160V	10µF	
C959	ECQB1103J	FILM	100V	10nF	
C960	ECJ2VC1H221J	CERAMIC	50V	220pF	
C961	ECA2CM100B	ELECT	160V	10µF	
C962	ECQM4472RJZ	FILM	400V	4.7µF	
C963	ECJ2VC1H221J	CERAMIC	50V	220pF	
C964	ECA1CHG101	ELECT	16V	100µF	
C966	ECA1HM101GB	ELECT	50V	100µF	
C967	ECA1CHG471B	ELECT	16V	470µF	
C974	ECA1VM101GB	ELECT	35V	100µF	

Cct Ref	Parts Number	Description		
C1040	ECQB1H223K	FILM	50V	22nF
C1041	ECA1HM470GB	ELECT	50V	47µF
C1043	ECKC1H101J	CERAMIC	50V	100pF
C1101	ECJ2VF1C104Z	CERAMIC	16V	100nF
C1102	EEVHB0J101P	CERAMIC	10V	100pF
C1103	ECJ2VF1C104Z	CERAMIC	16V	100nF
C1104	ECJ2VF1C104Z	CERAMIC	16V	100nF
C1105	ECJ2VF1C104Z	CERAMIC	16V	100nF
C1106	ECJ2VF1C104Z	CERAMIC	16V	100nF
C1107	ECJ2VF1C104Z	CERAMIC	16V	100nF
C1108	ECJ2VF1C104Z	CERAMIC	16V	100nF
C1109	ECJ2VF1C104Z	CERAMIC	16V	100nF
C1112	ECJ2VF1C104Z	CERAMIC	16V	100nF
C1115	ECJ2VB1C104K	CERAMIC	16V	100nF
C1116	ECJ2VF1C104Z	CERAMIC	16V	100nF
C1117	ECJ2VF1C104Z	CERAMIC	16V	100nF
C1118	ECJ2VB1H472K	CERAMIC	50V	4.7nF
C1119	ECJ2VF1C104Z	CERAMIC	16V	100nF
C1120	ECJ2VF1C104Z	CERAMIC	16V	100nF
C1121	ECJ2VF1C104Z	CERAMIC	16V	100nF
C1122	ECJ2VF1C104Z	CERAMIC	16V	100nF
C1123	ECJ2VF1C104Z	CERAMIC	16V	100nF
C1124	ECJ2VF1C104Z	CERAMIC	16V	100nF
C1125	ECJ2VF1C104Z	CERAMIC	16V	100nF
C1126	ECJ2VF1C104Z	CERAMIC	16V	100nF
C1127	ECJ2VF1C104Z	CERAMIC	16V	100nF
C1128	ECJ2VF1C104Z	CERAMIC	16V	100nF
C1129	ECJ2VF1C104Z	CERAMIC	16V	100nF
C1130	EEVHB0G221P	CERAMIC	16V	220pF
C1131	ECJ2VC1H220J	CERAMIC	50V	22pF
C1132	ECJ2VC1H220J	CERAMIC	50V	22pF
C1133	ECJ2VF1C104Z	CERAMIC	16V	100nF
C1134	ECJ2VF1C104Z	CERAMIC	16V	100nF
C1135	ECJ2VF1C104Z	CERAMIC	16V	100nF
C1136	ECJ2VF1C104Z	CERAMIC	16V	100nF
C1137	EEVHB0G221P	CERAMIC	16V	220pF
C1138	ECJ2VC1H221J	CERAMIC	50V	220pF
C1139	ECJ2VC1H221J	CERAMIC	50V	220pF
C1140	ECJ2VB1E104K	CERAMIC	25V	100nF
C1142	ECJ2VC1H151J	CERAMIC	50V	150pF
C1144	ECJ2VC1H101J	CERAMIC	50V	100pF
C1146	ECJ2VF1C104Z	CERAMIC	16V	100nF
C1147	ECA1CM471GB	ELECT	16V	470µF
C1148	ECJ2VF1C104Z	CERAMIC	16V	100nF
C1150	ECJ2VB1C104K	CERAMIC	16V	100nF
C1151	ECJ2VB1C104K	CERAMIC	16V	100nF
C1153	ECJ2VB1H103K	CERAMIC	50V	10nF
C1154	ECJ2VF1C105Z	CERAMIC	16V	1pF
C1156	ECA1HM100GB	ELECT	50V	10µF
C1157	TACCM0J335KT	CERAMIC	6.3V	3.3µF
C1158	TACCM0J335KT	CERAMIC	6.3V	3.3µF
C1159	EEVHB1C100R	CERAMIC	16V	10pF
C1160	EEVHB1C100R	CERAMIC	16V	10pF
C1161	EEVHB0G221P	CERAMIC	16V	220pF
C1162	ECJ2VF1C104Z	CERAMIC	16V	100nF
C1163	EEVHB0J101P	CERAMIC	10V	100pF
C1164	ECJ2VF1C104Z	CERAMIC	16V	100nF
C1165	ECJ2VF1C105Z	CERAMIC	16V	1pF
C1166	ECJ2VF1C104Z	CERAMIC	16V	100nF
C1167	EEVHB1C101P	CERAMIC	16V	100pF
C1168	ECJ2VF1C104Z	CERAMIC	16V	100nF
C1170	ECEA1EKN100B	ELECT	50V	10µF
C1251	ECA1HM101GB	ELECT	50V	100µF
C1252	ECA1HM100GB	ELECT	50V	10µF
C1253	ECJ2VB1C104K	CERAMIC	16V	100nF
C1254	ECJ2VB1C104K	CERAMIC	16V	100nF

Cct Ref	Parts Number	Description		
C1255	ECA1CM470GB	ELECT	16V	47µF
C1290	ECJ2VF1C104Z	CERAMIC	16V	100nF
C1292	ECJ2VF1C104Z	CERAMIC	16V	100nF
C1293	ECJ2VF1C104Z	CERAMIC	16V	100nF
C1294	ECA1HM101GB	ELECT	50V	100µF
C1295	ECJ2VF1C104Z	CERAMIC	16V	100nF
C1296	ECA0JM471GB	ELECT	6.3V	470µF
C1300	ECJ1VC1H120J	CERAMIC	50V	12pF
C1302	ECJ2VF1C105Z	CERAMIC	16V	1pF
C1303	ECJ1VC1H120J	CERAMIC	50V	12pF
C1306	ECJ1VC1H680J	CERAMIC	50V	68pF
C1307	ECJ1VC1H180J	CERAMIC	50V	18pF
C1309	ECJ1VC1H181J	CERAMIC	50V	180pF
C1310	ECJ1VC1H220J	CERAMIC	50V	22pF
C1312	ECJ1VC1H181J	CERAMIC	50V	180pF
C1313	TACCN0J105KT	CERAMIC	6.3V	1µF
C1315	TACCN0J105KT	CERAMIC	6.3V	1µF
C1316	ECJ2VF1C105Z	CERAMIC	16V	1pF
C1317	ECJ2VF1C105Z	CERAMIC	16V	1pF
C1318	ECJ2VF1C105Z	CERAMIC	16V	1pF
C1319	ECJ1VC1H470J	CERAMIC	50V	47pF
C1320	ECJ1VC1H060D	CERAMIC	50V	6pF
C1322	ECJ2VF1C105Z	CERAMIC	16V	1pF
C1323	ECJ2VF1C105Z	CERAMIC	16V	1pF
C1324	ECJ2VF1C105Z	CERAMIC	16V	1pF
C1325	ECJ2VF1C105Z	CERAMIC	16V	1pF
C1326	ECJ2VF1C105Z	CERAMIC	16V	1pF
C1327	ECJ2VF1C105Z	CERAMIC	16V	1pF
C1328	ECJ2VF1C105Z	CERAMIC	16V	1pF
C1329	ECJ2VF1C105Z	CERAMIC	16V	1pF
C1330	ECJ2VF1C105Z	CERAMIC	16V	1pF
C1331	ECJ2VF1C105Z	CERAMIC	16V	1pF
C1332	ECJ2VF1C105Z	CERAMIC	16V	1pF
C1333	ECJ2VF1C105Z	CERAMIC	16V	1pF
C1334	ECJ2VF1C105Z	CERAMIC	16V	1pF
C1335	ECJ1VB1H103	CERAMIC	50V	10nF
C1336	TACCM0J335KT	CERAMIC	6.3V	3.3µF
C1337	ECJ2VF1C105Z	CERAMIC	16V	1pF
C1338	ECJ2VF1C105Z	CERAMIC	16V	1pF
C1339	ECJ2VF1C105Z	CERAMIC	16V	1pF
C1340	ECJ2VF1C105Z	CERAMIC	16V	1pF
C1341	ECJ2VF1C105Z	CERAMIC	16V	1pF
C1342	ECJ1VF1H103Z	CERAMIC	50V	10nF
C1344	ECJ2VF1C105Z	CERAMIC	16V	1pF
C1345	ECJ2VF1C105Z	CERAMIC	16V	1pF
C1346	ECJ2VF1C105Z	CERAMIC	16V	1pF
C1347	ECJ2VF1C105Z	CERAMIC	16V	1pF
C1348	ECJ2VF1C105Z	CERAMIC	16V	1pF
C1349	ECJ2VF1C105Z	CERAMIC	16V	1pF
C1350	ECJ2VF1C105Z	CERAMIC	16V	1pF
C1351	ECJ2VF1C105Z	CERAMIC	16V	1pF
C1352	ECJ2VF1C105Z	CERAMIC	16V	1pF
C1353	ECJ2VF1C105Z	CERAMIC	16V	1pF
C1354	ECJ2VF1C105Z	CERAMIC	16V	1pF
C1355	TACCM0J335KT	CERAMIC	6.3V	3.3µF
C1356	TACCM0J335KT	CERAMIC	6.3V	3.3µF
C1357	ECJ1VC1H330J	CERAMIC	50V	33pF
C1358	ECJ1VB1H472K	CERAMIC	50V	4.7nF
C1359	ECJ1VB1H472K	CERAMIC	50V	4.7nF
C1360	ECJ2VF1C105Z	CERAMIC	16V	1pF
C1361	ECJ1VB1H103	CERAMIC	50V	10nF
C1362	EEVHB0J101P	CERAMIC	10V	100pF
C1363	ECJ1VC1H102J	CERAMIC	50V	1nF
C1364	ECJ1VC1H680J	CERAMIC	50V	68pF
C1365	ECJ2VF1C105Z	CERAMIC	16V	1pF
C1367	TACCN0J105KT	CERAMIC	6.3V	1µF

Cct Ref	Parts Number	Description		
C1370	ECJ1VB1H103	CERAMIC	50V	10nF
C1371	ECJ2VF1C105Z	CERAMIC	16V	1pF
C1372	ECJ1VF1H103Z	CERAMIC	50V	10nF
C1373	ECJ2VF1C105Z	CERAMIC	16V	1pF
C1374	ECJ1VB1H222K	CERAMIC	50V	2.2nF
C1376	ECJ1VC1H680J	CERAMIC	50V	68pF
C1377	ECJ1VB1H103	CERAMIC	50V	10nF
C1378	ECJ1VB1H222K	CERAMIC	50V	2.2nF
C1379	ECJ1VB1C104K	CERAMIC	16V	100nF
C1380	TACCN0J105KT	CERAMIC	6.3V	1µF
C1381	ECJ1VC1H330J	CERAMIC	50V	33pF
C1382	ECJ1VB1C393K	CERAMIC	16V	39nF
C1383	TACCN0J105KT	CERAMIC	6.3V	1µF
C1384	ECJ2VF1C105Z	CERAMIC	16V	1pF
C1385	ECJ2VF1H103Z	CERAMIC	50V	10nF
C1386	ECJ2VF1C105Z	CERAMIC	16V	1pF
C1387	ECJ2VF1C105Z	CERAMIC	16V	1pF
C1389	ECJ2VF1C105Z	CERAMIC	16V	1pF
C1390	TACCN0J105KT	CERAMIC	6.3V	1µF
C1391	TACCN0J105KT	CERAMIC	6.3V	1µF
C1392	ECJ2VF1C105Z	CERAMIC	16V	1pF
C1395	ECJ2VF1C105Z	CERAMIC	16V	1pF
C1396	EEVHB0G221P	CERAMIC	16V	220pF
C1398	ECJ1VC1H120J	CERAMIC	50V	12pF
C1399	ECJ1VC1H120J	CERAMIC	50V	12pF
C1400	ECJ2VF1C105Z	CERAMIC	16V	1pF
C1401	ECJ1VC1H101J	CERAMIC	50V	100pF
C1403	ECJ2VF1C105Z	CERAMIC	16V	1pF
C1404	ECJ1VC1H151J	CERAMIC	50V	150pF
C1405	ECJ2VF1C104Z	CERAMIC	16V	100nF
C1406	TACCN0J105KT	CERAMIC	6.3V	1µF
C1407	ECJ1VC1H561J	CERAMIC	50V	560pF
C1408	ECJ1VC1H561J	CERAMIC	50V	560pF
C1409	TACCN0J105KT	CERAMIC	6.3V	1µF
C1410	ECJ1VC1H561J	CERAMIC	50V	560pF
C1411	ECJ2VF1C105Z	CERAMIC	16V	1pF
C1412	ECJ2VF1C105Z	CERAMIC	16V	1pF
C1413	ECJ2VF1C105Z	CERAMIC	16V	1pF
C1414	ECJ1VC1H470J	CERAMIC	50V	47pF
C1415	ECJ1VC1H060D	CERAMIC	50V	6pF
C1417	ECJ2VF1C105Z	CERAMIC	16V	1pF
C1418	ECJ2VF1C105Z	CERAMIC	16V	1pF
C1419	ECJ2VF1C105Z	CERAMIC	16V	1pF
C1420	ECJ2VF1C105Z	CERAMIC	16V	1pF
C1421	ECJ2VF1C105Z	CERAMIC	16V	1pF
C1422	ECJ2VF1C105Z	CERAMIC	16V	1pF
C1423	ECJ2VF1C105Z	CERAMIC	16V	1pF
C1424	ECJ2VF1C105Z	CERAMIC	16V	1pF
C1425	ECJ2VF1C105Z	CERAMIC	16V	1pF
C1426	ECJ2VF1C105Z	CERAMIC	16V	1pF
C1427	ECJ2VF1C105Z	CERAMIC	16V	1pF
C1428	ECJ2VF1C105Z	CERAMIC	16V	1pF
C1429	ECJ2VF1C105Z	CERAMIC	16V	1pF
C1430	ECJ2VF1C105Z	CERAMIC	16V	1pF
C1431	ECJ2VF1C105Z	CERAMIC	16V	1pF
C1432	ECJ2VF1C105Z	CERAMIC	16V	1pF
C1433	ECJ2VF1C105Z	CERAMIC	16V	1pF
C1434	ECJ2VF1C105Z	CERAMIC	16V	1pF
C1435	ECJ2VF1C105Z	CERAMIC	16V	1pF
C1436	ECJ2VF1C105Z	CERAMIC	16V	1pF
C1437	ECJ2VF1C105Z	CERAMIC	16V	1pF
C1438	ECJ2VF1C105Z	CERAMIC	16V	1pF
C1439	ECJ2VF1C105Z	CERAMIC	16V	1pF
C1440	ECJ2VF1C105Z	CERAMIC	16V	1pF
C1441	ECJ2VF1C105Z	CERAMIC	16V	1pF
C1442	ECJ1VB1H472K	CERAMIC	50V	4.7nF

Cct Ref	Parts Number	Description		
C1443	TACCM0J335KT	CERAMIC	6.3V	3.3µF
C1444	ECJ2VF1C105Z	CERAMIC	16V	1pF
C1445	ECJ2VF1C105Z	CERAMIC	16V	1pF
C1446	ECJ2VF1C105Z	CERAMIC	16V	1pF
C1447	ECJ2VF1C105Z	CERAMIC	16V	1pF
C1448	TACCM0J335KT	CERAMIC	6.3V	3.3µF
C1449	ECJ1VF1H103Z	CERAMIC	50V	10nF
C1450	ECJ2VF1C105Z	CERAMIC	16V	1pF
C1451	ECJ2VF1C105Z	CERAMIC	16V	1pF
C1452	ECJ2VF1C105Z	CERAMIC	16V	1pF
C1454	ECJ2VF1C105Z	CERAMIC	16V	1pF
C1455	ECJ2VB1C104K	CERAMIC	16V	100nF
C1456	ECJ2VB1C104K	CERAMIC	16V	100nF
C1457	ECJ2VB1C104K	CERAMIC	16V	100nF
C1459	ECJ3VB1C474K	CERAMIC	16V	470nF
C1460	TACCM0J335KT	CERAMIC	6.3V	3.3µF
C1461	ECJ2VF1C105Z	CERAMIC	16V	1pF
C1462	ECJ1VB1H332K	CERAMIC	50V	3.3nF
C1465	TACCM0J335KT	CERAMIC	6.3V	3.3µF
C1466	ECJ1VC1H680J	CERAMIC	50V	68pF
C1467	ECJ1VC1H330J	CERAMIC	50V	33pF
C1468	ECJ2VF1C105Z	CERAMIC	16V	1pF
C1469	ECJ2VF1C105Z	CERAMIC	16V	1pF
C1470	ECJ2VF1C105Z	CERAMIC	16V	1pF
C1471	ECJ1VC1H330J	CERAMIC	50V	33pF
C1472	ECJ1VC1H680J	CERAMIC	50V	68pF
C1474	ECJ2VB1C104K	CERAMIC	16V	100nF
C1475	ECJ2VB1C104K	CERAMIC	16V	100nF
C1476	ECJ2VF1C105Z	CERAMIC	16V	1pF
C1477	ECJ2VB1C104K	CERAMIC	16V	100nF
C1478	TACCM0J335KT	CERAMIC	6.3V	3.3µF
C1479	EEVHP1C100R	CERAMIC	16V	10pF
C1480	EEVHP1C100R	CERAMIC	16V	10pF
C1481	TACCN0J105KT	CERAMIC	6.3V	1µF
C1482	TACCN0J105KT	CERAMIC	6.3V	1µF
C1483	EEVHP1E4R7R	CERAMIC	25V	4R7pF
C1484	EEVHP1C100R	CERAMIC	16V	10pF
C1485	EEVHP1C100R	CERAMIC	16V	10pF
C1486	EEVHP1E4R7R	CERAMIC	25V	4R7pF
C1487	EEVHP1C100R	CERAMIC	16V	10pF
C1488	EEVHP1C100R	CERAMIC	16V	10pF
C1489	TACCN0J105KT	CERAMIC	6.3V	1µF
C1490	TACCM0J335KT	CERAMIC	6.3V	3.3µF
C1493	EEVHB0J101P	CERAMIC	10V	100pF
C1494	EEVHB0G221P	CERAMIC	16V	220pF
C1495	EEVHB0G221P	CERAMIC	16V	220pF
C1496	EEVHB0J101P	CERAMIC	10V	100pF
C1497	EEVHB0J101P	CERAMIC	10V	100pF
C1498	EEVHB0G221P	CERAMIC	16V	220pF
C1499	EEVHB0J101P	CERAMIC	10V	100pF
C1500	EEVHB1C101P	CERAMIC	16V	100pF
C1501	EEVHB1C470P	CERAMIC	16V	47pF
C1502	EEVHB0J101P	CERAMIC	10V	100pF
C1503	EEVHB0J101P	CERAMIC	10V	100pF
C1505	EEVHB0G221P	CERAMIC	16V	220pF
C1506	EEVHB0G221P	CERAMIC	16V	220pF
C1507	EEVHB0G221P	CERAMIC	16V	220pF
C1509	ECA1HM100GB	ELECT	50V	10µF
C1510	ECJ2VB1C104K	CERAMIC	16V	100nF
C1511	ECJ2VB1C104K	CERAMIC	16V	100nF
C1513	ECJ2VB1C104K	CERAMIC	16V	100nF
C1514	ECJ2VB1C104K	CERAMIC	16V	100nF
C1515	ECJ2VB1C104K	CERAMIC	16V	100nF
C1516	ECJ2VB1C104K	CERAMIC	16V	100nF
C1520	ECQV1H104J	FILM	50V	100nF
C1544	ECA1HM101GB	ELECT	50V	100µF

Cct Ref	Parts Number	Description		
C1550	ECA1HM101GB	ELECT	50V	100µF
C1551	ECA1HM101GB	ELECT	50V	100µF
C1563	ECA1CM470GB	ELECT	16V	47µF
C1564	ECA1HM4R7GB	ELECT	50V	4.7µF
C1565	ECA1HM4R7GB	ELECT	50V	4.7µF
C1566	ECA1HM220GB	ELECT	50V	22µF
C1568	ECJ2VF1C105Z	CERAMIC	16V	1pF
C1569	ECJ2VF1C105Z	CERAMIC	16V	1pF
C1588	ECJ2VF1C105Z	CERAMIC	16V	1pF
C1589	ECJ2VF1C105Z	CERAMIC	16V	1pF
C1590	ECJ2VF1C105Z	CERAMIC	16V	1pF
C1591	ECJ2VF1C105Z	CERAMIC	16V	1pF
C1592	ECJ2VF1C105Z	CERAMIC	16V	1pF
C1593	ECJ2VF1C105Z	CERAMIC	16V	1pF
C1594	ECJ2VF1C105Z	CERAMIC	16V	1pF
C1595	ECJ2VF1C105Z	CERAMIC	16V	1pF
C1596	ECJ2VF1C105Z	CERAMIC	16V	1pF
C1597	ECJ2VF1C105Z	CERAMIC	16V	1pF
C1598	ECJ1VB1C104K	CERAMIC	16V	100nF
C1599	EEVHB0J101P	CERAMIC	10V	100pF
C2004	ECJ2VF1H104Z	CERAMIC	50V	100nF
C2005	ECJ2VF1H104Z	CERAMIC	50V	100nF
C2006	ECJ2VF1H104Z	CERAMIC	50V	100nF
C2007	ECJ2VC1H560J	CERAMIC	50V	56pF
C2008	ECJ2VC1H470J	CERAMIC	50V	47pF
C2009	ECJ2VC1H470J	CERAMIC	50V	47pF
C2010	ECJ2VC1H560J	CERAMIC	50V	56pF
C2011	ECJ2VC1H070D	CERAMIC	50V	7pF
C2014	ECJ2VC1H010C	CERAMIC	50V	1pF
C2015	ECJ2VF1C104Z	CERAMIC	16V	100nF
C2016	ECA1HM101GB	ELECT	50V	100µF
C2017	ECJ2VC1H010C	CERAMIC	50V	1pF
C2022	ECJ2VF1C105Z	CERAMIC	16V	1pF
C2023	ECJ2VF1C105Z	CERAMIC	16V	1pF
C2024	ECJ3VB1C474K	CERAMIC	16V	470nF
C2025	ECJ2VF1C104Z	CERAMIC	16V	100nF
C2027	ECA1HM100GB	ELECT	50V	10µF
C2028	ECJ2VF1C104Z	CERAMIC	16V	100nF
C2030	ECJ2VF1C104Z	CERAMIC	16V	100nF
C2031	ECA1HM101GB	ELECT	50V	100µF
C2032	ECJ2VF1C105Z	CERAMIC	16V	1pF
C2033	ECA1HM100GB	ELECT	50V	10µF
C2034	ECJ2VF1H103Z	CERAMIC	50V	10nF
C2035	ECJ2VF1H103Z	CERAMIC	50V	10nF
C2036	ECJ2VF1H103Z	CERAMIC	50V	10nF
C2037	ECJ2VF1C105Z	CERAMIC	16V	1pF
C2038	ECA1HM100GB	ELECT	50V	10µF
C2039	ECA1HM101GB	ELECT	50V	100µF
C2040	ECJ2VF1C104Z	CERAMIC	16V	100nF
C2041	ECA1HM3R3GB	ELECT	50V	3.3µF
C2042	ECJ2VB1H102K	CERAMIC	50V	1nF
C2043	ECJ2VB1H102K	CERAMIC	50V	1nF
C2044	ECJ2VB1H102K	CERAMIC	50V	1nF
C2045	ECJ2VB1H102K	CERAMIC	50V	1nF
C2047	ECJ2VF1H103Z	CERAMIC	50V	10nF
C2222	ECEA1HKA100	ELECT	50V	10pF
C2223	ECEA1HKA100	ELECT	50V	10pF
C2224	ECEA1HKA100	ELECT	50V	10pF
C2225	ECEA1HKA100	ELECT	50V	10pF
C2226	ECEA1HKA100	ELECT	50V	10pF
C2227	ECEA1HKA100	ELECT	50V	10pF
C2301	ECA1VHG222E	ELECT	35V	2.2pF
C2302	ECQV1H684J	FILM	50V	680nF
C2303	ECJ3VB1H104K	CERAMIC	50V	100nF
C2304	ECA1VM222GE	ELECT	35V	2200µF
C2305	ECJ2VB1H333K	CERAMIC	50V	33nF

Cct Ref	Parts Number	Description		
C2306	ECJ2VB1H561K	CERAMIC	50V	560pF
C2307	ECJ2VB1H471K	CERAMIC	50V	470pF
C2308	ECJ2VC1H270J	CERAMIC	50V	27pF
C2309	ECJ2VB1H471K	CERAMIC	50V	470pF
C2310	ECJ2VB1H331K	CERAMIC	50V	330nF
C2311	ECEA1HNR47UB	ELECT	50V	0.47µF
C2312	ECJ3VB1H104K	CERAMIC	50V	100nF
C2314	ECJ2VB1H331K	CERAMIC	50V	330nF
C2315	ECJ3VB1H104K	CERAMIC	50V	100nF
C2316	ECJ2VB1H471K	CERAMIC	50V	470pF
C2317	ECA1HM4R7GB	ELECT	50V	4.7µF
C2318	ECEA1HNR47UB	ELECT	50V	0.47µF
C2319	ECJ2VB1H102K	CERAMIC	50V	1nF
C2320	ECJ2VB1H681K	CERAMIC	50V	680pF
C2321	ECA1CM471GB	ELECT	16V	470µF
C2322	ECJ2VB1H471K	CERAMIC	50V	470pF
C2323	ECQV1H684J	FILM	50V	680nF
C2325	ECA1HM4R7GB	ELECT	50V	4.7µF
C2326	ECA1HM101GB	ELECT	50V	100µF
C2327	ECJ2VB1H102K	CERAMIC	50V	1nF
C2328	ECA1HM101GB	ELECT	50V	100µF
C2329	ECJ2VF1H104Z	CERAMIC	50V	100nF
C2330	ECJ2VB1H561K	CERAMIC	50V	560pF
C2331	ECJ3VB1H104K	CERAMIC	50V	100nF
C2332	ECJ2YB1H104K	CERAMIC	50V	100nF
C2333	ECJ2VB1H333K	CERAMIC	50V	33nF
C2334	ECJ2VF1H104Z	CERAMIC	50V	100nF
C2335	ECJ2VC1H101J	CERAMIC	50V	100pF
C2336	ECJ2VF1H104Z	CERAMIC	50V	100nF
C2337	ECA1CM470GB	ELECT	16V	47µF
C2338	ECEA1HU221	ELECT	50V	220µF
C2339	ECEA1HU221	ELECT	50V	220µF
C2340	ECA1HM101GB	ELECT	50V	100µF
C2341	ECA1HM330B	ELECT	50V	33µF
C2342	ECA1HM101GB	ELECT	50V	100µF
C2343	ECA1HM100GB	ELECT	50V	10µF
C2344	ECJ2VB1H472K	CERAMIC	50V	4.7nF
C2345	ECJ2VB1H472K	CERAMIC	50V	4.7nF
C2346	ECJ2VC1H101J	CERAMIC	50V	100pF
C2347	EEUFC1H102E	CERAMIC	50V	1µF
C2348	ECJ2VB1H681K	CERAMIC	50V	680pF
C2350	ECJ2VB1H471K	CERAMIC	50V	470pF
C2352	ECEA1HN2R2UB	ELECT	50V	2.2µF
C2353	ECJ2VB1H104K	CERAMIC	50V	100nF
C2357	ECQV1H154J	FILM	50V	150nF
C2359	ECJ2VB1H104K	CERAMIC	50V	100nF
C2360	ECUV1H223KBX	S.M. CAP	50V	22nF
C2362	ECJ2VB1H562K	CERAMIC	50V	5.6nF
C2363	ECQV1H684J	FILM	50V	680nF
C2365	ECA1HM330B	ELECT	50V	33µF
C2366	EEANA1E1R0B	CERAMIC	25V	0R1µF
C2367	ECJ2VC1H561J	CERAMIC	50V	560pF
C2368	ECJ3VB1H104K	CERAMIC	50V	100nF
C2369	ECJ2VB1H103K	CERAMIC	50V	10nF
C2371	ECJ2VB1C154K	CERAMIC	16V	150nF
C2372	ECEA1CN100	ELECT	16V	10µF
C2373	ECJ2VB1H102K	CERAMIC	50V	1nF
C2374	ECJ2VB1H102K	CERAMIC	50V	1nF
C2375	ECJ2VB1H102K	CERAMIC	50V	1nF
C2376	ECJ2VF1C104Z	CERAMIC	16V	100nF
C2377	ECJ2VB1H102K	CERAMIC	50V	1nF
C2378	ECA0JM222GB	ELECT	6.3V	2.2nF
C2380	ECJ2VB1H472K	CERAMIC	50V	4.7nF
C2383	ECJ2VC1H101J	CERAMIC	50V	100pF
C2386	ECJ2VB1H681K	CERAMIC	50V	680pF
C2387	ECJ3VB1H104K	CERAMIC	50V	100nF

Cct Ref	Parts Number	Description			
C2388	ECJ2VB1H104K	CERAMIC	50V	100nF	
C2389	ECJ2VB1C154K	CERAMIC	16V	150nF	
C2390	ECQV1H334JL3	FILM	50V	330nF	
C2391	ECJ2VB1H104K	CERAMIC	50V	100nF	
C2392	ECUV1H223KBX	S.M. CAP	50V	22nF	
C2393	ECJ2VB1H562K	CERAMIC	50V	5.6nF	
C2395	ECJ2VB1H562K	CERAMIC	50V	5.6nF	
C2396	ECA1HM2R2GB	ELECT	50V	2.2µF	
C2397	EEANA1E1R0B	CERAMIC	25V	0R1µF	
C2398	ECA1CM102B	ELECT	16V	1000µF	
C2399	ECJ2VB1H103K	CERAMIC	50V	10nF	
C2400	ECA1VHG221B	ELECT	35V	220µF	
C2401	ECOS2GA101BB	ELECT	400V	100µF	
C2402	ECA1CM221GB	ELECT	16V	220µF	
C2403	ECKC3D471JB	CERAMIC	2KV	470pF	⚠
C2404	ECA1CM221GB	ELECT	16V	220µF	
C2405	ECQB1H333J	FILM	50V	33nF	
C2406	ECQB1H683K	FILM	50V	68nF	
C2407	ECKC2H103J	CERAMIC	500V	10nF	⚠
C2416	ECQV1H104J	FILM	50V	100nF	
C2417	ECKC2H471J	CERAMIC	500V	470pF	⚠
C2418	ECKC2H471J	CERAMIC	500V	470pF	⚠
C2419	EEUFC1E331B	CERAMIC	25V	330pF	
C2420	ECA1HHG102E	ELECT	50V	1nF	
C2421	ECA1VM102GE	ELECT	35V	1nF	
C2422	ECA1VM102GE	ELECT	35V	1nF	
C2423	ECJ2VF1H104Z	CERAMIC	50V	100nF	
C2424	ECEA1CN100	ELECT	16V	10µF	
C2425	ECJ2VF1H104Z	CERAMIC	50V	100nF	
C2426	ECJ2VF1H104Z	CERAMIC	50V	100nF	
C2427	ECQV1H474JZ	FILM	50V	470nF	
C2428	ECQV1H474JZ	FILM	50V	470nF	
C2429	ECQV1H474JZ	FILM	50V	470nF	
C2430	ECQV1H474JZ	FILM	50V	470nF	
C2432	ECJ2VF1C104Z	CERAMIC	16V	100nF	
C2433	ECA1CM471GB	ELECT	16V	470µF	
C2434	ECJ2VF1C104Z	CERAMIC	16V	100nF	
C2435	ECJ2YB1H473K	CERAMIC	50V	47nF	
C2436	ECJ2YB1H473K	CERAMIC	50V	47nF	
C2437	ECJ2YB1H473K	CERAMIC	50V	47nF	
C2438	ECJ2YB1H473K	CERAMIC	50V	47nF	
C2440	ECJ2VB1H104K	CERAMIC	50V	100nF	
C2441	ECJ2VB1H104K	CERAMIC	50V	100nF	
C2443	ECJ2VB1H103K	CERAMIC	50V	10nF	
C2444	ECJ2VB1H562K	CERAMIC	50V	5.6nF	
C2445	ECJ2VC1H561J	CERAMIC	50V	560pF	
C2446	ECJ2VC1H561J	CERAMIC	50V	560pF	
C2447	ECJ2VB1H103K	CERAMIC	50V	10nF	
C2448	ECJ2VB1H562K	CERAMIC	50V	5.6nF	
C2449	ECJ2VC1H561J	CERAMIC	50V	560pF	
C2450	ECJ2VC1H561J	CERAMIC	50V	560pF	
C2451	ECA1HM330B	ELECT	50V	33µF	
C2452	ECA1HM330B	ELECT	50V	33µF	
C2453	ECA1HM330B	ELECT	50V	33µF	
C2454	ECA1HM330B	ELECT	50V	33µF	
C2455	ECJ2VF1H103Z	CERAMIC	50V	10nF	
C2456	ECJ2VF1H103Z	CERAMIC	50V	10nF	
C2457	ECJ2VF1H103Z	CERAMIC	50V	10nF	
C2458	ECJ2VF1H103Z	CERAMIC	50V	10nF	
C2459	ECEA1HU101	ELECT	50V	100µF	
C2460	ECEA1HU101	ELECT	50V	100µF	
C2461	ECEA1HU101	ELECT	50V	100µF	
C2462	ECEA1HU101	ELECT	50V	100µF	
C2463	ECJ2VB1H223K	CERAMIC	50V	22nF	
C2464	ECJ2VB1H223K	CERAMIC	50V	22nF	
C2465	ECJ2VB1H223K	CERAMIC	50V	22nF	

Cct Ref	Parts Number	Description		
C2466	ECJ2VB1H223K	CERAMIC	50V	22nF
C2471	ECA1HHG101B	ELECT	50V	100µF
C2472	ECEA1HU101	ELECT	50V	100µF
C2473	ECEA1HU101	ELECT	50V	100µF
C2474	ECEA1HU101	ELECT	50V	100µF
C2475	ECJ2VF1H103Z	CERAMIC	50V	10nF
C2476	ECJ2VF1H103Z	CERAMIC	50V	10nF
C2477	ECJ2VF1H103Z	CERAMIC	50V	10nF
C2478	ECJ2VF1H103Z	CERAMIC	50V	10nF
C2479	ECQV1H474JZ	FILM	50V	470nF
C2480	ECQV1H474JZ	FILM	50V	470nF
C2481	ECQV1H474JZ	FILM	50V	470nF
C2482	ECQV1H474JZ	FILM	50V	470nF
C2483	ECJ2VB1H102K	CERAMIC	50V	1nF
C2484	ECJ2VB1H102K	CERAMIC	50V	1nF
C2485	ECJ2VB1H102K	CERAMIC	50V	1nF
C2486	ECJ2VB1H102K	CERAMIC	50V	1nF
C2489	ECEA1HU221	ELECT	50V	220µF
C2490	ECUV1H104KBX	S.M. CAP	50V	100nF
C2491	ECUV1H683KBX	S.M. CAP	50V	68nF
C2492	ECUV1H683KBX	S.M. CAP	50V	68nF
C2493	ECUV1H104KBX	S.M. CAP	50V	100nF
C2494	ECJ2VB1E563K	CERAMIC	25V	56nF
C2495	ECJ2VB1H103K	CERAMIC	50V	10nF
C2496	ECJ2VC1H470J	CERAMIC	50V	47pF
C2497	ECJ2VF1H103Z	CERAMIC	50V	10nF
C2498	ECJ2VC1H220J	CERAMIC	50V	22pF
C2499	ECJ2VB1H471K	CERAMIC	50V	470pF
C2500	ECQV1H334JL3	FILM	50V	330nF
C2501	ECJ2VF1C105Z	CERAMIC	16V	1pF
C2502	ECJ2VF1C105Z	CERAMIC	16V	1pF
C2503	ECJ2VF1H103Z	CERAMIC	50V	10nF
C2504	ECJ2VF1C105Z	CERAMIC	16V	1pF
C2505	ECJ2VF1C105Z	CERAMIC	16V	1pF
C2506	ECJ2VF1C105Z	CERAMIC	16V	1pF
C2507	ECJ2VF1H683Z	CAPACITO	50V	68nF
C2508	ECJ2VF1C105Z	CERAMIC	16V	1pF
C2509	ECJ2VF1C105Z	CERAMIC	16V	1pF
C2510	ECJ2VF1C105Z	CERAMIC	16V	1pF
C2511	ECJ2VF1C105Z	CERAMIC	16V	1pF
C2512	ECJ2VF1C105Z	CERAMIC	16V	1pF
C2513	ECJ2YF1C225Z	CERAMIC	16V	2.2nF
C2514	ECJ2VF1C105Z	CERAMIC	16V	1pF
C2515	ECJ2VC1H220J	CERAMIC	50V	22pF
C2516	ECJ2VB1C104K	CERAMIC	16V	100nF
C2517	ECJ2VC1H471J	CERAMIC	50V	470pF
C2519	ECJ2VC1H270J	CERAMIC	50V	27pF
C2520	ECJ2VF1H103Z	CERAMIC	50V	10nF
C2521	ECJ2VF1C105Z	CERAMIC	16V	1pF
C2523	ECJ2VF1C105Z	CERAMIC	16V	1pF
C2524	ECJ2VF1C105Z	CERAMIC	16V	1pF
C2525	ECJ2VF1C105Z	CERAMIC	16V	1pF
C2526	ECEA1HKA3R3	ELECT	50V	3300pF
C2527	ECJ2VF1H104Z	CERAMIC	50V	100nF
C2528	ECJ2VF1C105Z	CERAMIC	16V	1pF
C2529	ECJ2VF1H104Z	CERAMIC	50V	100nF
C2530	ECEA1HKA3R3	ELECT	50V	3300pF
C2531	ECJ2VF1C105Z	CERAMIC	16V	1pF
C2532	ECJ2VF1C105Z	CERAMIC	16V	1pF
C2533	ECJ2VF1H683Z	CAPACITO	50V	68nF
C2534	ECEA1CKA100	ELECT	16V	10µF
C2535	ECJ2VF1H683Z	CAPACITO	50V	68nF
C2536	ECJ2VF1H104Z	CERAMIC	50V	100nF
C2537	ECJ2VF1H222Z	CERAMIC	50V	2.2nF
C2538	ECEA1CKA220B	ELECT	16V	20µF
C2539	ECEA1CKA100	ELECT	16V	10µF

Cct Ref	Parts Number	Description		
C2540	ECEA1CKA220B	ELECT	16V	20µF
C2541	ECEA1CKA100	ELECT	16V	10µF
C2542	ECJ2VF1H222Z	CERAMIC	50V	2.2nF
C2543	ECJ2VF1H104Z	CERAMIC	50V	100nF
C2544	ECJ2VF1H103Z	CERAMIC	50V	10nF
C2546	ECEA1CKA101	ELECT	16V	100µF
C2547	ECJ2VF1H103Z	CERAMIC	50V	10nF
C2550	ECJ2VF1C104Z	CERAMIC	16V	100nF
C2551	ECJ2VF1C104Z	CERAMIC	16V	100nF
C2552	ECJ2VF1C104Z	CERAMIC	16V	100nF
C2553	ECJ2VF1C104Z	CERAMIC	16V	100nF
C2555	ECJ2VF1C105Z	CERAMIC	16V	1pF
C2556	ECEA1CKA470	ELECT	16V	47µF
C2557	ECEA1CKA470	ELECT	16V	47µF
C2558	ECJ2VC1H101J	CERAMIC	50V	100pF
C2559	ECJ2VC1H100C	CERAMIC	50V	10pF
C2561	ECJ2VF1H103Z	CERAMIC	50V	10nF
C2562	ECJ2VF1C105Z	CERAMIC	16V	1pF
C2563	ECJ2VF1H103Z	CERAMIC	50V	10nF
C2564	ECJ2VC1H330J	CERAMIC	50V	33pF
C2565	ECJ2VC1H330J	CERAMIC	50V	33pF
C2566	ECJ2VF1C105Z	CERAMIC	16V	1pF
C2567	ECJ2VF1C105Z	CERAMIC	16V	1pF
C2568	ECEA1CKA100	ELECT	16V	10µF
C2573	ECJ2VF1C105Z	CERAMIC	16V	1pF
C2574	ECJ2VF1C105Z	CERAMIC	16V	1pF
C2575	ECJ2VF1C105Z	CERAMIC	16V	1pF
C2576	ECJ2VF1C105Z	CERAMIC	16V	1pF
C2577	ECJ2VF1C105Z	CERAMIC	16V	1pF
C2578	ECJ2VF1C105Z	CERAMIC	16V	1pF
C2579	ECJ2VF1C105Z	CERAMIC	16V	1pF
C2580	ECEA1CKA470	ELECT	16V	47µF
C2588	ECJ2VF1H104Z	CERAMIC	50V	100nF
C2589	ECJ2VF1C105Z	CERAMIC	16V	1pF
C2590	ECA1CM471GB	ELECT	16V	470µF
C2592	ECJ2VB1H333K	CERAMIC	50V	33nF
C2594	ECJ2VB1H333K	CERAMIC	50V	33nF
C2596	ECUV1H333KBX	S.M. CAP	50V	33nF
C2597	ECUV1H333KBX	S.M. CAP	50V	33nF
C2601	ECEA1HN010UB	ELECT	50V	1µF
C2602	ECEA1HN010UB	ELECT	50V	1µF
C2603	ECEA1HN010UB	ELECT	50V	1µF
C2604	ECEA1HN010UB	ELECT	50V	1µF
C2605	ECJ2VF1C105Z	CERAMIC	16V	1pF
C2606	ECJ2VF1C105Z	CERAMIC	16V	1pF
C2610	ECA1CM471GB	ELECT	16V	470µF
C2611	ECJ2VB1H562K	CERAMIC	50V	5.6nF
C2612	ECJ2VB1H562K	CERAMIC	50V	5.6nF
C2613	ECJ2VB1H562K	CERAMIC	50V	5.6nF
C2614	ECJ2VC1H221J	CERAMIC	50V	220pF
C2615	ECJ2VC1H221J	CERAMIC	50V	220pF
C2616	ECJ2VF1H103Z	CERAMIC	50V	10nF
C2617	ECJ2VF1H103Z	CERAMIC	50V	10nF
C2618	ECEA1CKA101	ELECT	16V	100µF
C2619	ECJ2VB1H562K	CERAMIC	50V	5.6nF
C2620	ECJ2VB1H562K	CERAMIC	50V	5.6nF
C2621	ECJ2VF1C474Z	CERAMIC	16V	470nF
C2622	ECEA1CKA101	ELECT	16V	100µF
C2623	ECJ2VC1H221J	CERAMIC	50V	220pF
C2624	ECJ2VC1H221J	CERAMIC	50V	220pF
C2625	ECJ2VC1H221J	CERAMIC	50V	220pF
C2626	ECJ2VC1H221J	CERAMIC	50V	220pF
C2627	ECJ2VB1H562K	CERAMIC	50V	5.6nF
C2628	ECJ2VB1H562K	CERAMIC	50V	5.6nF
C2629	ECJ2VB1H562K	CERAMIC	50V	5.6nF
C2630	ECJ2VB1H562K	CERAMIC	50V	5.6nF

Cct Ref	Parts Number	Description		
C2631	ECJ2VB1H562K	CERAMIC	50V	5.6nF
C2632	ECJ2VF1C105Z	CERAMIC	16V	1pF
C2633	ECJ2VF1H103Z	CERAMIC	50V	10nF
C2634	ECJ2VF1C105Z	CERAMIC	16V	1pF
C2635	ECJ2VC1H150J	CERAMIC	50V	15pF
C2636	ECJ2VF1C105Z	CERAMIC	16V	1pF
C2638	ECJ2VC1H150J	CERAMIC	50V	15pF
C2639	ECJ2VC1H150J	CERAMIC	50V	15pF
C2640	ECJ2VF1C105Z	CERAMIC	16V	1pF
C2644	ECJ2VF1C105Z	CERAMIC	16V	1pF
C2645	ECJ2VF1C105Z	CERAMIC	16V	1pF
C2646	ECJ2VF1H104Z	CERAMIC	50V	100nF
C2647	ECEA1CKA101	ELECT	16V	100µF
C2650	ECJ2VC1H150J	CERAMIC	50V	15pF
C2651	ECJ2VC1H150J	CERAMIC	50V	15pF
C2652	ECJ2VF1H103Z	CERAMIC	50V	10nF
C2653	ECJ2VF1C105Z	CERAMIC	16V	1pF
C2654	ECJ2VF1C105Z	CERAMIC	16V	1pF
C2655	ECJ2VF1C105Z	CERAMIC	16V	1pF
C2656	ECJ2VF1H103Z	CERAMIC	50V	10nF
C2657	ECJ2VF1C105Z	CERAMIC	16V	1pF
C2660	ECJ2VF1C105Z	CERAMIC	16V	1pF
C2661	ECJ2VF1C105Z	CERAMIC	16V	1pF
C2662	ECJ2VF1C105Z	CERAMIC	16V	1pF
C2663	ECEA1AKA221B	ELECT	10V	220µF
C2664	ECJ2VF1C105Z	CERAMIC	16V	1pF
C2665	ECJ2VF1H104Z	CERAMIC	50V	100nF
C2667	ECJ2VF1H104Z	CERAMIC	50V	100nF
C2668	ECJ2VF1H104Z	CERAMIC	50V	100nF
C2687	ECJ2VC1H102J	CERAMIC	50V	1nF
C2702	ECJ2VF1H104Z	CERAMIC	50V	100nF
C2703	ECJ2VF1C104Z	CERAMIC	16V	100nF
C2704	ECA1CM471GB	ELECT	16V	470µF
C2707	ECA1CHG471B	ELECT	16V	470µF
C2708	EEUFC1A471B	CERAMIC	10V	470pF
C2711	ECJ2VF1C104Z	CERAMIC	16V	100nF
C2713	ECJ2VF1H104Z	CERAMIC	50V	100nF
C2715	ECJ2VF1H104Z	CERAMIC	50V	100nF
C2716	EEUFC1A471B	CERAMIC	10V	470pF
C2719	ECA1CM471GB	ELECT	16V	470µF
C2720	ECA1CM471GB	ELECT	16V	470µF
C2722	ECJ2VF1H104Z	CERAMIC	50V	100nF
C2723	ECJ2VF1H104Z	CERAMIC	50V	100nF
C2726	ECA1EHG102B	ELECT	25V	1000µF
C2730	ECA1CM471GB	ELECT	16V	470µF
C2731	ECA1CM471GB	ELECT	16V	470µF
C2732	EEUFC1A471B	CERAMIC	10V	470pF
C2733	ECJ2VF1H104Z	CERAMIC	50V	100nF
C2734	ECA1EM471GB	ELECT	25V	470µF
C2737	ECA1CM471GB	ELECT	16V	470µF
C2740	ECA1CM471GB	ELECT	16V	470µF
C2750	ECJ2VF1C105Z	CERAMIC	16V	1pF
C2751	ECJ2VF1C105Z	CERAMIC	16V	1pF
C3001	ECJ2VF1C104Z	CERAMIC	16V	100nF
C3003	ECEA1CN470	ELECT	16V	47µF
C3006	ECJ2VF1C104Z	CERAMIC	16V	100nF
C3007	ECJ2VB1E473K	CERAMIC	25V	47nF
C3008	ECJ2VB1E473K	CERAMIC	25V	47nF
C3009	ECJ2VB1E473K	CERAMIC	25V	47nF
C3010	ECJ2VB1E473K	CERAMIC	25V	47nF
C3011	ECJ2VB1E473K	CERAMIC	25V	47nF
C3012	ECJ2VB1E473K	CERAMIC	25V	47nF
C3013	ECJ2VF1C105Z	CERAMIC	16V	1pF
C3014	ECJ2VF1C105Z	CERAMIC	16V	1pF
C3015	ECJ2VF1C105Z	CERAMIC	16V	1pF
C3016	ECJ2VF1C105Z	CERAMIC	16V	1pF

Cct Ref	Parts Number	Description		
C3017	ECJ2VF1C105Z	CERAMIC	16V	1pF
C3018	ECJ2VB1C104K	CERAMIC	16V	100nF
C3020	ECJ2VF1C105Z	CERAMIC	16V	1pF
C3021	ECJ2VB1C104K	CERAMIC	16V	100nF
C3024	ECJ2VF1C105Z	CERAMIC	16V	1pF
C3026	ECJ2VF1C105Z	CERAMIC	16V	1pF
C3027	ECJ2VF1C105Z	CERAMIC	16V	1pF
C3028	ECJ2VF1C105Z	CERAMIC	16V	1pF
C3029	ECJ2VF1C105Z	CERAMIC	16V	1pF
C3032	ECJ2VF1C105Z	CERAMIC	16V	1pF
C3033	ECJ2VF1C105Z	CERAMIC	16V	1pF
C3034	ECJ2VF1C104Z	CERAMIC	16V	100nF
C3035	ECA1HM101GB	ELECT	50V	100µF
C3043	ECJ2VF1C105Z	CERAMIC	16V	1pF
C3044	ECJ2VF1C105Z	CERAMIC	16V	1pF
C3045	ECJ2VF1C105Z	CERAMIC	16V	1pF
C3046	ECA1HM101GB	ELECT	50V	100µF
C3047	ECJ2VF1C105Z	CERAMIC	16V	1pF
C3048	ECJ2VF1C105Z	CERAMIC	16V	1pF
C3049	ECJ2VF1C105Z	CERAMIC	16V	1pF
C3050	ECA1CM221GB	ELECT	16V	220µF
C3051	ECJ2VF1C105Z	CERAMIC	16V	1pF
C3053	ECA1HM100GB	ELECT	50V	10µF
C3054	ECA1HM100GB	ELECT	50V	10µF
C3055	ECEA1HN100UB	ELECT	50V	10µF
C3056	ECEA1HN100UB	ELECT	50V	10µF
C3057	ECJ2VF1C105Z	CERAMIC	16V	1pF
C3058	ECJ2VF1C105Z	CERAMIC	16V	1pF
C3065	ECJ2VF1C105Z	CERAMIC	16V	1pF
C3066	ECJ2VF1C105Z	CERAMIC	16V	1pF
C3068	ECJ2VF1C105Z	CERAMIC	16V	1pF
C3071	ECJ2VC1H101J	CERAMIC	50V	100pF
C3072	ECJ2VC1H101J	CERAMIC	50V	100pF
C3073	ECJ2VC1H101J	CERAMIC	50V	100pF
C3077	ECJ2VF1C104Z	CERAMIC	16V	100nF
C3078	ECJ2VF1C104Z	CERAMIC	16V	100nF
C3079	ECEA1CN470	ELECT	16V	47µF
C3101	ECQB1H333J	FILM	50V	33nF
C3102	ECQB1H333J	FILM	50V	33nF
C3107	ECKC1H561J	CERAMIC	50V	560pF
C3109	ECKC1H561J	CERAMIC	50V	560pF
C3111	ECKC1H103J	CERAMIC	50V	100µF
C3112	ECJ2VC1H680J	CERAMIC	50V	68pF
C3113	ECA1CM470GB	ELECT	16V	47µF
C3114	ECEA1CKA470	ELECT	16V	47µF
C3115	ECEA1CN470	ELECT	16V	47µF
C3301	ECJ2VF1C104Z	CERAMIC	16V	100nF
C3302	ECJ2VF1C104Z	CERAMIC	16V	100nF
C3303	ECJ2VF1C104Z	CERAMIC	16V	100nF
C3322	ECJ2VC1H471J	CERAMIC	50V	470pF
C3323	ECA1HHG100B	ELECT	50V	10µF
C3324	ECA1HHG100B	ELECT	50V	10µF
C3401	ECJ2VC1H561J	CERAMIC	50V	560pF
C3404	ECJ2VC1H561J	CERAMIC	50V	560pF
C3407	ECJ2VC1H561J	CERAMIC	50V	560pF
C3408	ECJ2VC1H561J	CERAMIC	50V	560pF
C3409	ECJ2VC1H561J	CERAMIC	50V	560pF
C3410	ECJ2VC1H561J	CERAMIC	50V	560pF
C3415	ECJ2VC1H102J	CERAMIC	50V	1nF
C3417	ECJ2VC1H561J	CERAMIC	50V	560pF
C3418	ECJ2VC1H561J	CERAMIC	50V	560pF
C3419	ECJ2VC1H561J	CERAMIC	50V	560pF
C3420	ECJ2VC1H561J	CERAMIC	50V	560pF
C3425	ECJ2VC1H102J	CERAMIC	50V	1nF
C3427	ECJ2VC1H561J	CERAMIC	50V	560pF
C3428	ECJ2VC1H561J	CERAMIC	50V	560pF

Cct Ref	Parts Number	Description			
C3429	ECJ2VC1H561J	CERAMIC	50V	560pF	
C3430	ECJ2VC1H561J	CERAMIC	50V	560pF	
C3435	ECJ2VC1H102J	CERAMIC	50V	1nF	
C3437	ECJ2VC1H561J	CERAMIC	50V	560pF	
C3440	ECJ2VC1H561J	CERAMIC	50V	560pF	
C3443	ECJ2VC1H561J	CERAMIC	50V	560pF	
C3446	ECJ2VC1H561J	CERAMIC	50V	560pF	
C3450	ECEA1AKA221B	ELECT	10V	220µF	
C3451	ECEA1AKA221B	ELECT	10V	220µF	
C3452	ECEA1CKA101	ELECT	16V	100µF	
C3453	ECEA1CKA101	ELECT	16V	100µF	
C3454	ECJ2VC1H220J	CERAMIC	50V	22pF	
C3455	ECJ2VC1H220J	CERAMIC	50V	22pF	
C3456	ECJ2VC1H220J	CERAMIC	50V	22pF	
C3457	ECJ2VC1H221J	CERAMIC	50V	220pF	
C3458	ECJ2VC1H221J	CERAMIC	50V	220pF	
C3459	ECJ2VC1H221J	CERAMIC	50V	220pF	
C3480	ECJ2VB1H104K	CERAMIC	50V	100nF	
C3481	ECJ2VB1H104K	CERAMIC	50V	100nF	
C3482	ECA1CM471GB	ELECT	16V	470µF	
C3483	ECA1CM471GB	ELECT	16V	470µF	
C4801	ECA1HM101GB	ELECT	50V	100µF	
C4802	ECJ2VF1C104Z	CERAMIC	16V	100nF	
C4803	ECQV1H334JL3	FILM	50V	330nF	
C4804	ECQV1H334JL3	FILM	50V	330nF	
C4805	ECJ2VF1C104Z	CERAMIC	16V	100nF	
C4806	ECJ2VB1H103K	CERAMIC	50V	10nF	
C4807	ECA1HM4R7GB	ELECT	50V	4.7µF	
C4808	ECA1HM4R7GB	ELECT	50V	4.7µF	
C4809	ECJ2VB1H103K	CERAMIC	50V	10nF	
TERMINALS AND LINKS					
JK351	0330550049	CRT SOCKET			⚠
JK3102	TJB8E026	AV TERMINAL			
JK3401	0350536400	SCART SOCKET			
JK3402	0350536400	SCART SOCKET			
JK3403	0350536400	SCART SOCKET			
JK3405	TJB8E015	RCA TERMINAL(3P)			
JK3406	TJB8E015	RCA TERMINAL(3P)			
JK3407	TORX178B	OPTICAL CONNECTOR			
JK3408	TORX178B	OPTICAL CONNECTOR			
R868	TSF19252	FS LINK			⚠
R874	TSF19402	FS LINK			⚠
R2405	TSF19252	FS LINK			⚠
R2419	TSF19402	FS LINK			⚠
R2420	TSF19252	FS LINK			⚠
SWITCHES					
S840	ESB92S11B	SWITCH			⚠
S1003	EVQ23405R	SWITCH			
S1004	EVQ23405R	SWITCH			
S1005	EVQ23405R	SWITCH			
S1006	EVQ23405R	SWITCH			
S1007	EVQ23405R	SWITCH			
RELAYS					
RL801	K6B1ADA00010	RELAY			⚠
RL802	K6B2ADA00004	RELAY			⚠
	XTV3+12A	SCREW CRT FIXING			
MISCELLANEOUS COMPONENTS					
	EASG7D506B2	SPEAKER TWEETER			
	TBLG3019	SET FOOT (FRONT)			
	TBLG3020	SET FOOT (REAR)			
	TBM8E2137	PRESET LABEL			
	TBM8E2138	PRESET LABELRIGHT			
	TBM8E2172	AV LABEL			
	TEK6935	LID SWITCH			

Cct Ref	Parts Number	Description	
	TES2298	CRT EARTH SPRING	
	TKK8E026	SPEAKER REFLECTOR	
	TKP8E1323-1	AV COVER	
	TKP8E1410	BOTTOM PANEL	
	TKP8E1431	LED WINDOW	
	TLK8E05150	CANCELLATION COIL	⚠
	TLK8E05164	GEOMAGNETIC COIL	⚠
	TPC8E4910	CARTON	
	TPD8E759	CUSHION	
	TPD8E760	CUSHION	
	UM-3DJ-2P	BATTERY PACK	
INSTRUCTION BOOKS			
	TQB8E3340A	GERMAN	⚠
	TQB8E3340C	ITALIAN	⚠
	TQB8E3340D	FRENCH	⚠
TERMINALS AND LINKS			
	TJS59034	AUDIO TERMINAL	