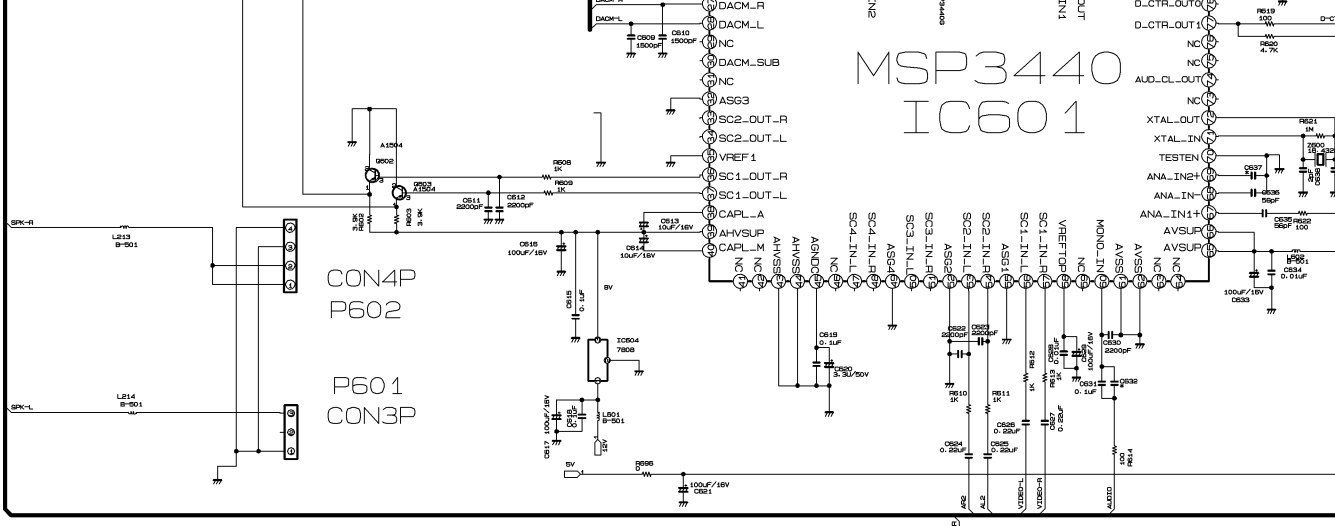
MSP3440
IC601
CON4P
P602
P601
CON3P
SPK-R
SPK-L
DACM_R
DACM_L
NC
DACM_SUB
ASG3
SC2_OUT_R
SC2_OUT_L
VREF1
SC1_OUT_R
SC1_OUT_L
CAPL_A
AHVSUP
CAPL_M
D_CTR_OUT0
D_CTR_OUT1
AUD_CL_OUT
XTAL_OUT
XTAL_IN
TESTEN
ANA_IN2+
ANA_IN-
ANA_IN1+
AVSUP
AVSS
IC504
7805

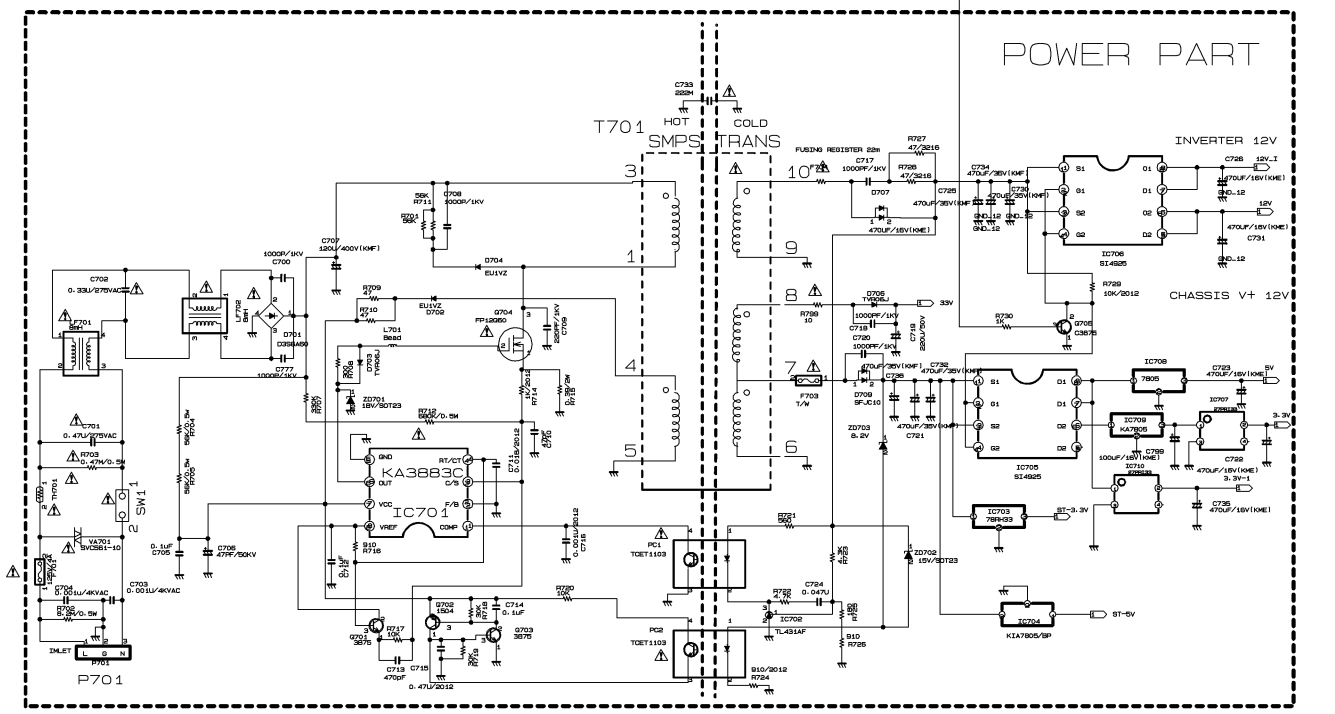
POWER PART
T701
HOT
COLD
SMPS
TRANS
INVERTER 12V
CHASSIS V+ 12V
IC701
KA3883C
IC705
S14925
IC706
S14925
IC708
7805
IC709
KA7805
IC703
78R-33
IC704
KIA7805/3P
IC702
TL431AF
PC1
TCET1103
PC2
TCET1103
P701
IMLET
SW1
FUSING REGISTER 22m
ST-3.3V
ST-5V