CIRCUIT DIAGRAMS

MAIN PWB CIRCUIT DIAGRAM (1/2)

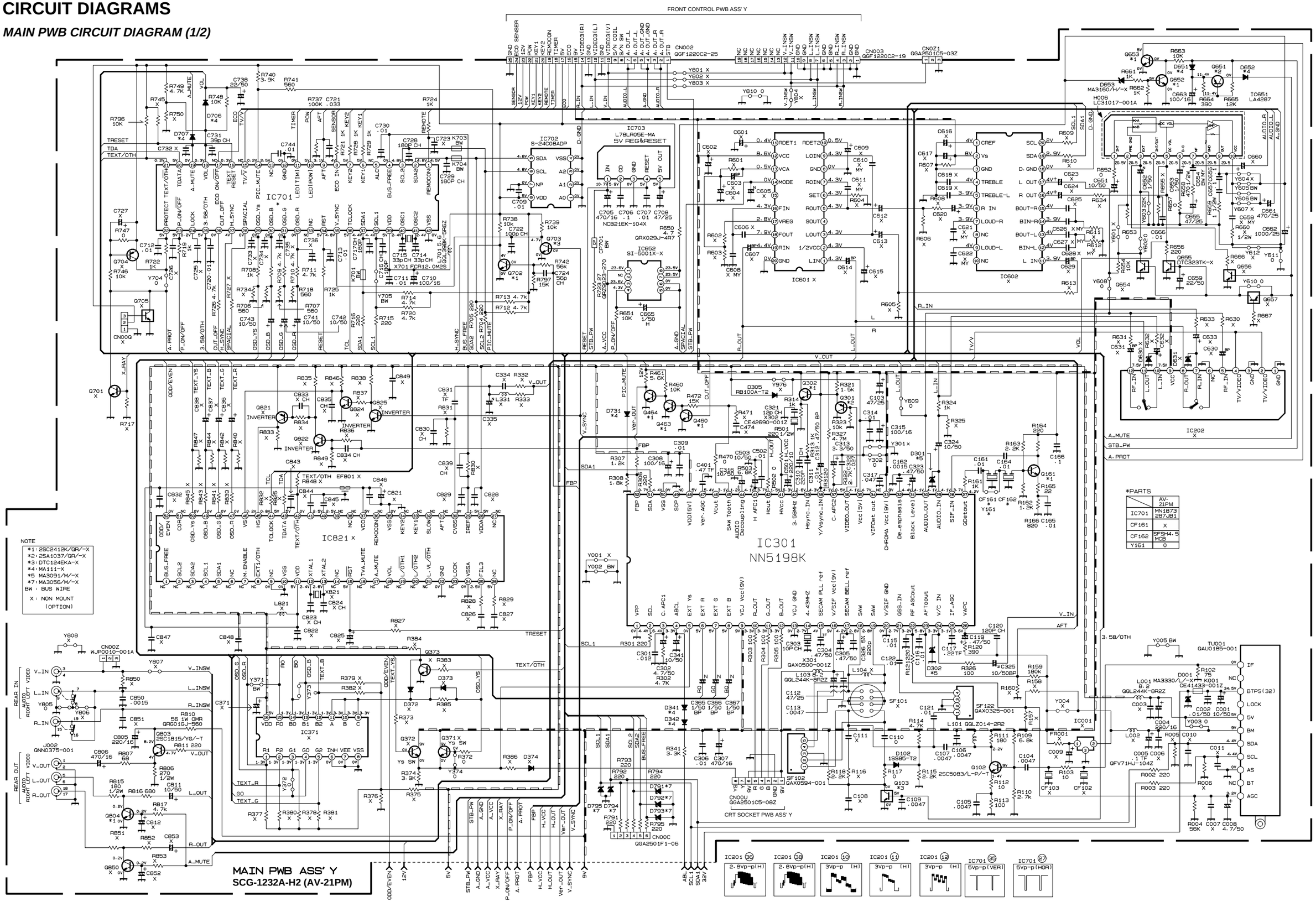

MAIN PWB CIRCUIT DIAGRAM (2/2)

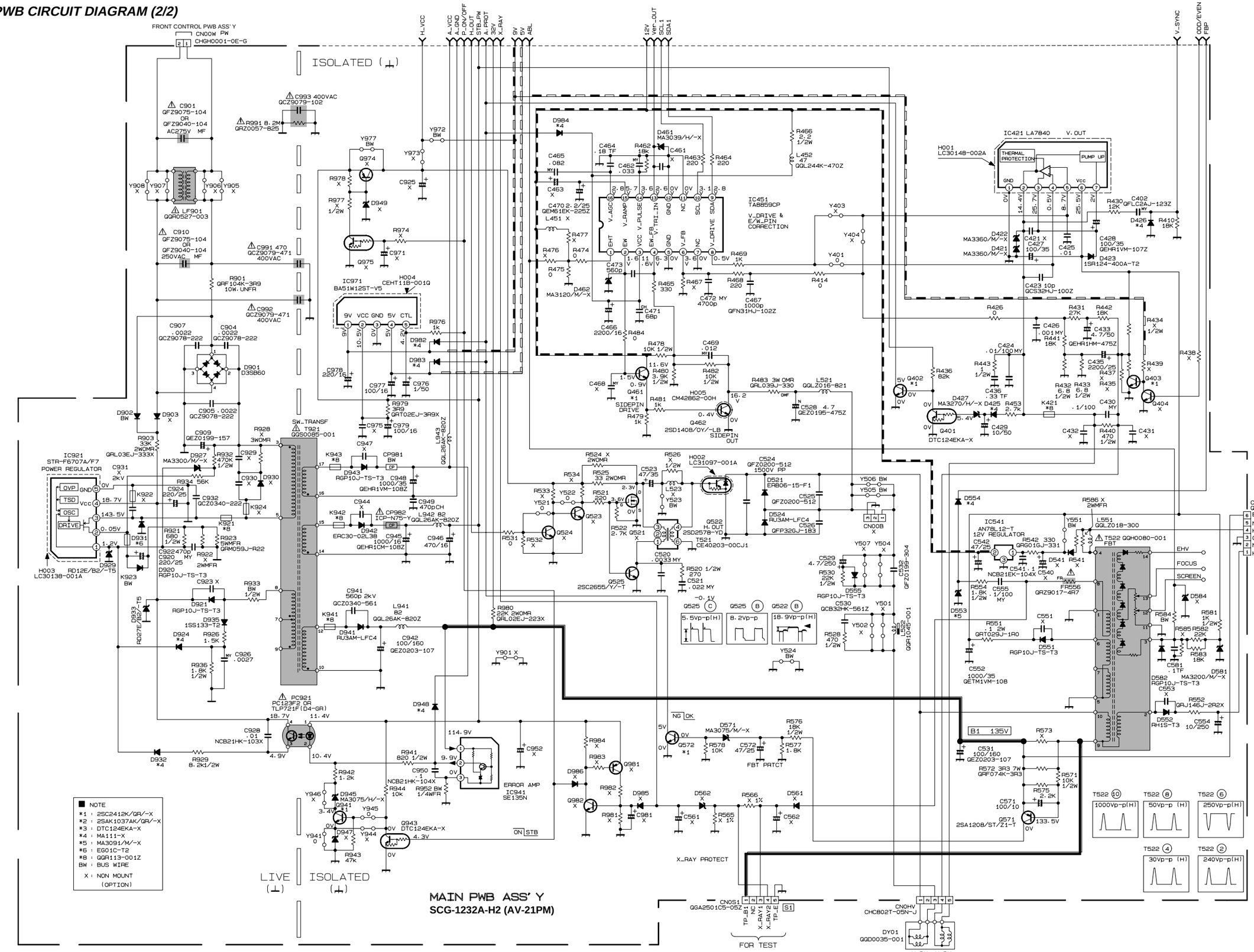

MAIN PWB ASS' Y
SCG-1232A-H2 (AV-21PM)