JVC

SERVICE MANUAL

COLOUR TELEVISION

BASIC CHASSIS
CM-II'

AV-21F9(NS)

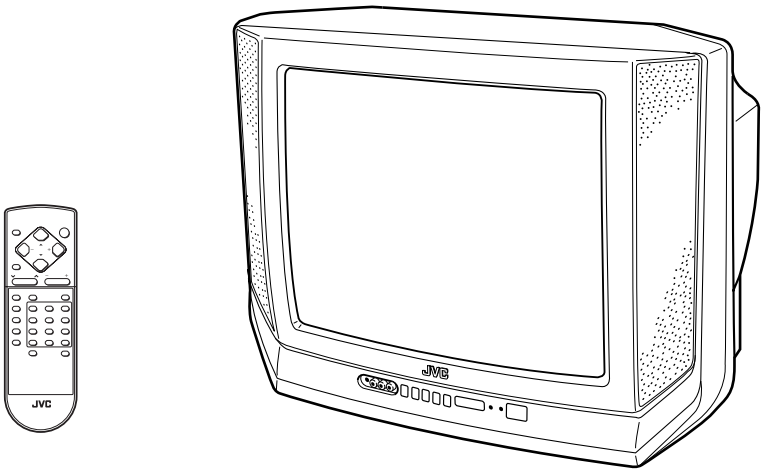

CONTENTS

■ SPECIFICATIONS 2
■ SAFETY PRECAUTIONS 3
■ FEATURES 4
★ OPERATING INSTRUCTIONS (APPENDED) 1-1
■ SPECIFIC SERVICE INSTRUCTIONS 4
■ SERVICE ADJUSTMENTS 10
★ STANDARD CIRCUIT DIAGRAM (APPENDED) 2-1
■ PARTS LIST 27

COPYRIGHT © 2000 VICTOR COMPANY OF JAPAN, LTD.

No. 56037
Aug. 2000

REPLACEMENT OF MEMORY IC

1. MEMORY IC

This TV uses the following memory IC.

Memory IC: IC1702 on MAIN PW Board

The memory IC memorizes data for correctly operating the video and deflection circuits. When replacing the memory IC, be sure to use the same type IC written with the initial values of data. In other words, use the specific IC listed in "PRINTED WIRING BOARD PARTS LIST". For its mounting location, refer to "ADJUSTMENT LOCATIONS".

2. PROCEDURE FOR REPLACING MEMORY IC

(1) Power off

Switch the power off and unplug the power cord from the wall outlet.

(2) Replacing the memory IC

Replace the memory IC with new one. Be sure to use the memory IC written with the initial data values.

(3) Power on

Plug the power cord into the wall outlet and switch the power on.

(4) Check and setting of SYSTEM CONSTANT SET:

1) Press the DISPLAY key and the PICTURE MODE key on the remote control unit simultaneously.
   The SERVICE MENU screen will be displayed. (See Fig. 1.)
2) In the SERVICE MENU, press the DISPLAY key and PICTURE MODE key simultaneously. Then, the SYSTEM CONSTANT SET screen will be displayed. (See Fig. 2.)
3) Check whether the setting values of the SYSTEM CONSTANT SET are the same as those indicated in Table 1. If the value is different, select the setting item with the MENU ▽/△ key, and set the correct value with the MENU – / + key.
4) Press the DISPLAY key twice to return to the normal screen.

(5) Receive channel setting

Refer to the **OPERATING INSTRUCTIONS** and set the receive channels (channels preset).

NAME OF REMOTE CONTROL KEYS

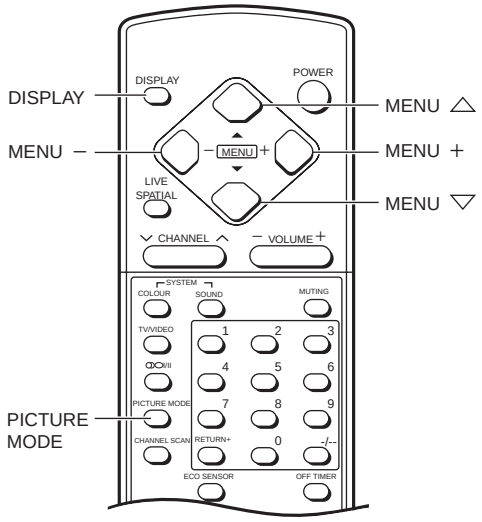

(6) User setting

Check the user setting values in Table 2, and if setting value is different, set the correct value.
For setting, refer to the **OPERATING INSTRUCTIONS**.

(7) Setting of SERVICE MENU

Verify the setting for each setting item in the SERVICE MENU. (See Table 3.) If readjustment is necessary, perform adjustment referring to "SERVICE ADJUSTMENTS".

SERVICE MENU

```
SERVICE MENU

1. IF      2. V/C     3. AUDIO
4. DEF     5. VSM PRESET
6. CENTER
7. TURBO TIMER OFF

1-7 : SELECT          DISP : EXIT
******** *****          **.****
            *** *****     **.****
```

Fig. 1

SYSTEM CONSTANT - I

```
SYSTEM CONSTANT SET      1/3

1.COLOUR AUTO    : NO
2. COLOUR        : MULTI
3. ECO SENSOR    : YES
4. BASS          : NO-SB-ON
5. VOL LIMITER   : YES
6.TEXT           : NO
▽/△: SELECT
– / + : OPERATE        DISP : EXIT
```

SYSTEM CONSTANT - II

```
SYSTEM CONSTANT SET      2/3

7. MSP           : YES
8. LANGUAGE      : E/R/A/F
9. EW-PIN IC     : NO
10. B/B OFF MUTE : OFF
11. LED          : 2
12. D/K NICAM    : YES
▽/△: SELECT
– / + : OPERATE        DISP : EXIT
```

SYSTEM CONSTANT - III

```
SYSTEM CONSTANT SET      3/3

13. ALC          : YES
14. BBE          : NO

▽/△: SELECT
– / + : OPERATE        DISP : EXIT
```

Fig. 2

SETTING OF SYSTEM CONSTANT SET

Table 1

Setting item	Setting contents	Setting value
1. COLOUR AUTO	→ YES → NO ┐	NO
2. COLOUR	→ MULTI. → TRIPLE → PAL ┐	MULTI
3. ECO SENSOR	→ YES → NO ┐	YES
4. BASS	→ YES-BB → YES-BB-SB → YES-SB ┐ └ NO-SB-OFF ← NO-SB-ON ← YES-BA ←	NO-SB-ON
5. VOL. LIMITER	→ YES → NO ┐	YES
6. TEXT	→ YES → NO ┐	NO
7. MSP	→ YES → NO → NO-A2 ┐	YES
8. LANGUAGE	→ E/R/A/F → E/A/F → E/A → E/F ┐	E/R/A/F
9. EW-PIN IC	→ YES → NO ┐	NO
10. B/B OFF MUTE	→ ON → OFF ┐	OFF
11. LED	→ 2 → 3 ┐	2
12. D/K NICAM	→ YES → NO ┐	YES
13. ALC	→ YES → NO ┐	YES
14. BBE	→ YES → NO ┐	NO

USER SETTING VALUES

Table 2

Setting item	Setting value	Setting item	Setting value
SUB POWER	ON	TREBLE	CENTER
CHANNEL POSITION	1 POSITION	BASS	CENTER
CHANNEL PRESET	Refer to OPERATING INSTRUCTIONS	BALANCE	CENTER
		VNR	OFF
VOLUME	Appropriate sound volume	OFF TIMER	OFF
TV/VIDEO	TV	AUTO SHUTOFF	OFF
ON SCREEN DISPLAY	POSITION NUMBER DISPLAY	ECO SENSOR	OFF
COLOUR SYSTEM	AUTO PAL	LANGUAGE	ENGLISH
SOUND SYSTEM	B / G	ALC	HIGH
BILINGUAL MODE	STEREO	BLUE BACK	OFF
PICTURE MODE (VSM)	BRIGHT	ON TIMER	PR1 0:00
LIVE SPATIAL	OFF	CHILD LOCK	OFF

SERVICE MENU SETTING ITEMS

Table 3

Service menu	Setting item	Service menu	Setting item
1. IF	1. VCO 2. DELAY POINT	**3. AUDIO**	1. ERROR LIMIT 2. A2 ID THR 3. SOUND SYSTEM **Do not adjust.**
2. V / C	1. CUTOFF(R/G/B) 2. DRIVE(R/B) 3. BRIGHT 4. CONT. 5. COLOUR 6. TINT 7. BLACK OFFSET(R-Y/B-Y) 8. SHARP 9. TEXT(RGB)CONT. 10. B.S. OFF 11. B.S. POINT 12. DC TRAN RATE 13. APA-CON FO/SW 14. VSM PHASE 15. VSM GAIN 16. CLL SW 17. CLL LEVEL 18. ABL POINT 19. ABL GAIN 20. Y-DL(TV/VIDEO/S) 21. P. ACL SW 22. WPL SW 23. Y GAMMA **Do not adjust.**	**4. DEF**	2. V-SHIFT 3. V-SIZE 4. H-CENT 7. V-S. CR 10. V-LINE
		5. VSM PRESET (BRIGHT/STD/SOFT)	1. TINT 2. COLOUR 3. BRIGHT 4. CONT. 5. SHARP **Do not adjust.**
		6. CENTER ADJUST	TREBLE BASS **Do not adjust.**
		7. TURBO TIMER	ON/OFF Should be set to OFF. (When you turn the TV power off, the Turbo Timer is automatically set to OFF.)

SERVICE ADJUSTMENTS

BEFORE STARTING SERVICE ADJUSTMENT

1. **There are 2 ways for adjusting this TV: One is with the REMOTE CONTROL UNIT and the other is the conventional method using adjustment parts and components.**
2. **The setting (adjustment) using the REMOTE CONTROL UNIT is made on the basis of the initial setting values. The setting values which adjust the screen to the optimum condition can be different from the initial setting values.**
3. Make sure that connection is correctly made to AC power source.
4. Turn on the power of the TV and measuring instrument for warming up for at least 30 minutes before starting adjustment.
5. If the receive or input signal is not specified, use the most appropriate signal for adjustment.
6. Never touch parts (such as variable resistors, transformers and capacitors) not shown in the adjustment items of this service adjustment.
7. Preparation for adjustment (presetting):
   Unless otherwise specified in the adjustment items, preset the following functions with the remote control unit.

Function	Setting value
PICTURE MODE (VSM)	BRIGHT
COLOUR/BRIGHT/CONT./SHARP	See "VSM Preset" on page 23.
VNR	OFF
TREBLE/BASS/BALANCE	CENTER
LIVE SPATIAL	OFF
ECO SENSOR	OFF

MEASURING INSTRUMENT AND FIXTURES

1. DC voltmeter (or Digital voltmeter)
2. Oscilloscope
3. Signal generator (Pattern generator)
   [PAL / SECAM / NTSC]
4. Remote control unit

ADJUSTMENT/CHECK ITEMS

Adjustment/Check item	Page
B1 POWER SUPPLY Check	14
FOCUS Adjustment	14
IF CIRCUIT Adjustment	14
V/C (VIDEO/CHROMA) CIRCUIT Adjustment	15
DEFLECTION CIRCUIT Adjustment	21
VSM PRESET Adjustment	23
AUDIO Adjustment	23
CENTER Adjustment	23
PURITY, CONVERGENCE Adjustment	24

BASIC OPERATION IN SERVICE MENU

1. TOOL OF SERVICE MENU OPERATION
Operate the SERVICE MENU with the remote control unit.

2. SERVICE MENU ITEMS
With the SERVICE MENU, various settings (adjustments) can be made, and they are broadly classified in the following items of settings:

- 1. IF ..... For entering/adjusting the setting values (adjustment values) of the IF circuit.
- 2. V/C ..... For entering/adjusting the setting values (adjustment values) of the VIDEO/CHROMA circuit.
- 3. AUDIO ..... For entering/adjusting the setting values (adjustment values) of the multiplicity sound circuit. (Do not adjust the preset values.)
- 4. DEF ..... For entering/adjusting the setting values (adjustment values) of the DEFLECTION circuit.
- 5. VSM PRESET ..... For setting the values of STANDARD, SOFT and BRIGHT (Do not adjust the preset values.) (VSM: video status memory)
- 6. CENTER ..... For setting the CENTER ADJUST values of TREBLE and BASS. (Do not adjust the preset values.)
- 7. TURBO TIMER ..... For quick setting the values of TIMER COUNT — adjustable not only by minutes but also by second. If it is ON, the time in TIMER mode changes from 1 minute into 1 second temporarily. (Applicable to OFF TIMER, ON TIMER and AUTO SHUTOFF)

  Note: When you turn the TV power off, the Turbo Timer is automatically set to OFF.

3. BASIC OPERATION IN SERVICE MENU

(1) How to enter SERVICE MENU

Press the DISPLAY key and the PICTURE MODE key on the remote control unit simultaneously.
The SERVICE MENU screen will be displayed. (See Fig. 1.)

SERVICE MENU

```
SERVICE MENU

1. IF      2. V/C     3. AUDIO
4. DEF     5. VSM PRESET
6. CENTER
7. TURBO TIMER OFF

1-7 : SELECT          DISP : EXIT
******** *****          **.****
*** *****      **.****
```

Fig. 1

(2) Selection of SUB MENU SCREEN

Press one of the keys 1 ~ 7 on the remote control unit, and select the SUB MENU SCREEN from the SERVICE MENU. (See Fig. 2 on the next page.)

SERVICE MENU → SUB MENU

1. IF
2. V / C
3. AUDIO
4. DEF
5. VSM PRESET
6. CENTER
7. TURBO TIMER

(3) Method of Setting

*Once the setting values are set, they are memorized automatically.
*It must not adjust without inputting a signal.

1) 1. IF

[1. VCO]

(a) 1 Key ..... Select **1. IF**.
(b) 1 Key ..... Select 1. VCO. (CW)
(c) VCO(CW) TRANSF. ..... Adjust VCO(CW) while watching the colour (yellow/blue) of the characters on the screen.
(d) DISPLAY Key ..... When this is pressed twice, you will return to the SERVICE MENU.

[2. DELAY POINT]

(a) 1 Key ..... Select **1. IF**.
(b) 2 Key ..... Select 2. DELAY POINT.
(c) MENU – / + Key ..... Adjust the setting value.
(d) DISPLAY Key ..... When this is pressed twice, you will return to the SERVICE MENU.

2) 2. V/C, 3. AUDIO, 4. DEF, 5. VSM PRESET and 6. CENTER

(a) 2 ~ 6 Keys ..... Select one from **2. V/C, 3. AUDIO, 4. DEF, 5. VSM PRESET and 6. CENTER**.
(b) MENU ▽/△ key ..... Select setting items.
(c) MENU – / + Key ..... Adjust the setting values of the setting items.
● Use the number keys on the remote control unit for setting of WHITE BALANCE and BLACK OFFSET. For the setting, refer to each item concerned.
(d) DISPLAY Key ..... When this is pressed, you will return to the SERVICE MENU.

3) 7. TURBO TIMER

(a) 7 Key ..... Each time you press the key, ON/OFF state of TURBO TIMER changes. (Should be set to OFF.)

(4) Release of SERVICE MENU

After completing the setting, return to the SERVICE MENU by pressing the DISPLAY key, then again press the DISPLAY key to return to the normal screen.

SUB MENU SCREEN

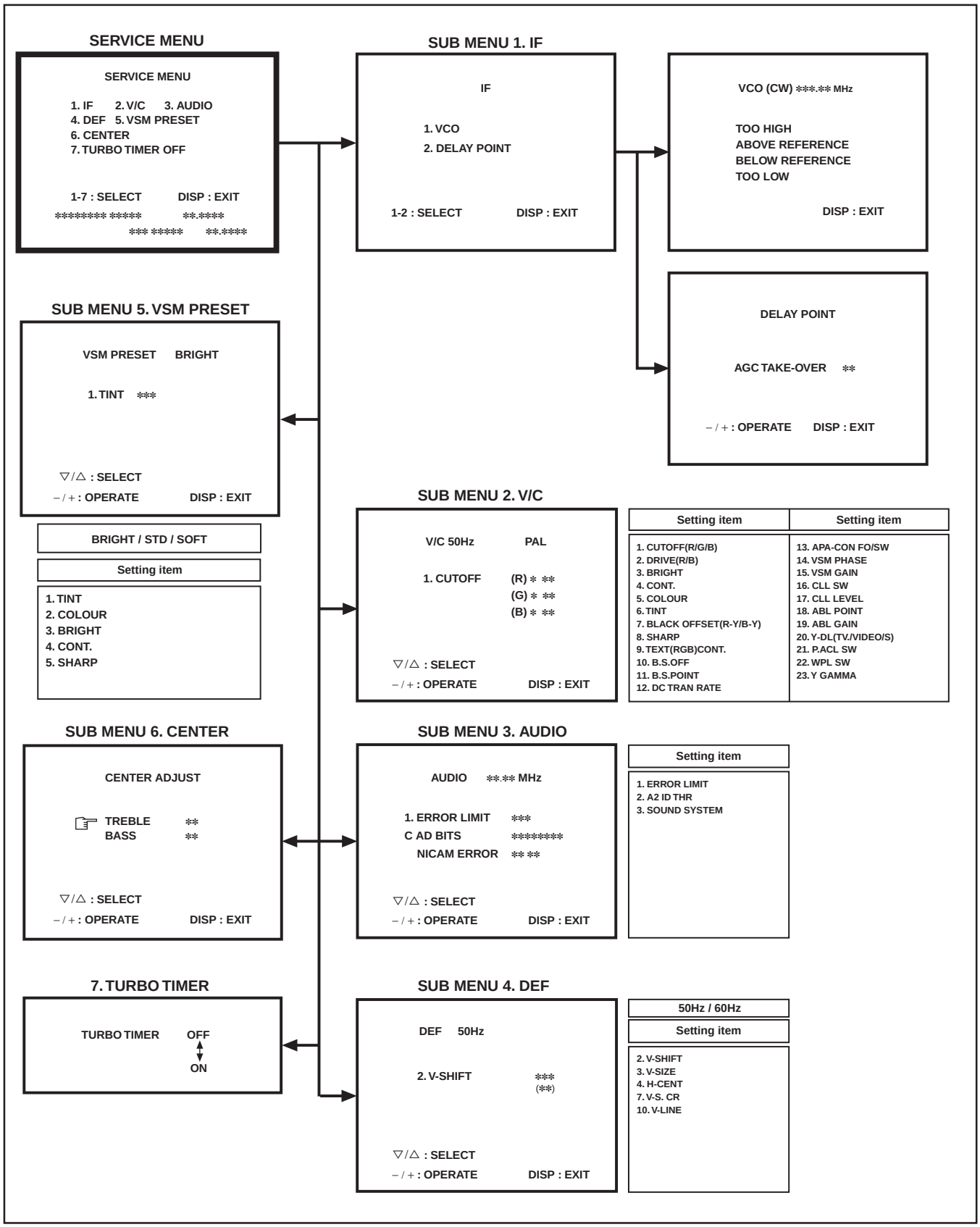

Fig. 2

ADJUSTMENTS

B1 POWER SUPPLY

Item	Measuring instrument	Test point	Adjustment part	Description
Check of B1 POWER SUPPLY	**Signal Generator** **DC Voltmeter**	**TP-91 (B1)** **TP-E (⏚)** **[S1 connector]**		1. Receive a whole black signal. 2. Connect a DC voltmeter between TP-91 (B1) and TP-E (⏚) (between pins 1 and 5 of the connector S1). 3. Make sure that the voltage is **DC113.3 ± 1.5V**.

FOCUS ADJUSTMENT

Item	Measuring instrument	Test point	Adjustment part	Description
Adjustment of FOCUS	**Signal generator**		**FOCUS VR** **[In HVT]**	1. Receive a cross-hatch signal. 2. While watching the screen, adjust the FOCUS VR to make the vertical and horizontal lines as fine and sharp as possible. 3. Make sure that, when the screen is darkened, the lines remain in good focus.

IF CIRCUIT ADJUSTMENT

Item	Measuring instrument	Test point	Adjustment part	Description
Adjustment of VCO (CW)	**Remote control unit**		**VCO (CW) TRANSF.** **[On IF PWB]**	● **Under normal conditions, no adjustment is required.** 1. Select **1. IF** from the SERVICE MENU. 2. Press the **1** key to select **1. VCO**. 3. Select a receivable broadcast channel with the CHANNEL key. 4. Turn the core of VCO(CW) TRANSF. until the colour of the characters "TOO HIGH" displayed on the screen changes from blue to **yellow**. (Step 1) 5. Then slowly turn the core of VCO(CW) TRANSF. counterclockwise until the characters "ABOVE REFERENCE" changes from blue to **yellow**. (Step 2) 6. Further slowly turn the core of VCO(CW) TRANSF. until the colour of the characters "BELOW REFERENCE" changes from blue to **yellow**. (Step 3) 7. Press the DISPLAY key three times to return to normal screen. 8. Perform CHANNEL PRESET again, and make sure that each broadcast is being received properly.

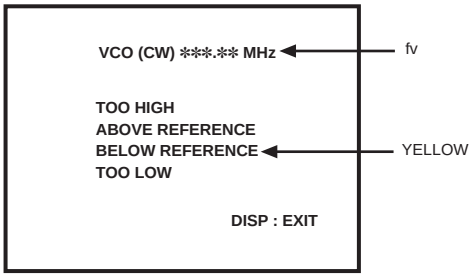

Screen display	Step 1	Step 2	Step 3
TOO HIGH	**Yellow** →	Blue →	Blue
ABOVE REFERENCE	Blue →	**Yellow** →	Blue
BELOW REFERENCE	Blue →	Blue →	**Yellow**
TOO LOW	Blue →	→	Blue

Item	Measuring instrument	Test point	Adjustment part	Description
Adjustment of DELAY POINT	**Remote control unit**		**DELAY POINT (AGC TAKE-OVER)**	1. Receive a black and white signal (colour off). 2. Select **1. IF** from the SERVICE MENU. 3. Select **2. DELAY POINT** by pressing the **2** key on the remote control. 4. Adjust the MENU – or + key until video noise disappears. 5. Press the DISPLAY key three times to return to the normal screen. 6. Turn to other channels and make sure that there are no irregularities.

Setting (Adjustment) item	Variable range	Initial setting value
DELAY POINT (AGC TAKE-OVER)	0 ~ 63	19

V/C (VIDEO/CHROMA) CIRCUIT ADJUSTMENT

The setting (adjustment) using the remote control unit is made on the basis of the initial setting values.
The setting values which adjust the screen to the optimum condition can be different from the initial setting values.
- **Do not change the initial setting values of the setting (adjustment) items not listed in "ADJUSTMENT".**

[SUB MENU 2. V/C] **: Do not adjust.**

Setting item \ Colour system		Variable range	Initial setting value			
			PAL	SECAM	NTSC 3.58	NTSC 4.43
1. CUT OFF (R / G / B)		–128 ~ +127	0	←	←	←
2. DRIVE (R / B)		–128 ~ +127	0	←	←	←
3. BRIGHT		–128 ~ +127	+19	←	←	←
4. CONT.		–42 ~ +42	–4	←	←	←
5. COLOUR		–60 ~ +68	+11	+3	+5	0
6. TINT	TV / VIDEO	–64 ~ +63	———	———	+12 / –4	–4 / –4
7. BLACK OFFSET (R-Y / B-Y)		–8 ~ +7	———	+4 / +2	———	———
8. SHARP	TV / VIDEO	–32 ~ +31	–7 / +1	←	←	←
9. TEXT (RGB) CONT.		–128 ~ +77	+30	←	←	←
10. B.S.OFF		0 ~ +1	0	←	←	←
11. B.S.POINT		0 ~ +7	+5	←	←	←
12. DC TRAN RATE		0 ~ +7	+3	←	←	←
13. APA-CON FO/SW		0 ~ +3	+1	←	←	←
14. VSM PHASE		0 ~ +3	+2	←	←	←
15. VSM GAIN		0 ~ +3	+1	←	←	←
16. CLL SW		0 ~ +1	+1	←	←	←
17. CLL LEVEL		0 ~ +3	+2	←	←	←
18. ABL POINT		0 ~ +7	+2	←	←	←
19. ABL GAIN		0 ~ +7	+2	←	←	←
20. Y-DL (TV / VIDEO / S)		0 ~ +7	+2 / +4 / +2	+3 / +3 / +2	+4 / +4 / +2	←
21. P.ACL SW		0 ~ +1	+1	←	←	←
22. WPL SW		0 ~ +1	0	←	←	←
23. Y GAMMA		0 ~ +1	0	←	←	←

Item	Measuring instrument	Test point	Adjustment part	Description
Adjustment of WHITE BALANCE (Low light)	● **Signal generator** ● **Remote control unit**		**1. CUTOFF (R)** **CUTOFF (G)** **CUTOFF (B)** **SCREEN VR (In HVT)**	1. Receive a black and white signal (colour off). 2. Select **2. V/C** from the SERVICE MENU. 3. Select **1. CUTOFF (R), (G)** and **(B)** with MENU ▽/△ key, and set each value to initial setting value with **4** ~ **9** keys on the remote control unit. 4. Press the **1** key on the remote control unit to produce a single horizontal line. 5. Turn the SCREEN VR fully counterclockwise, then slowly turn it clockwise to where a red, blue, or green colour is faintly visible. 6. Use keys **4** ~ **9** on the remote control unit and adjust the other 2 colours to where the single horizontal line appears white. 7. Turn the SCREEN VR to where the single horizontal line glows faintly. 8. Press the **2** key to return to **1. CUTOFF** screen. 9. Press the DISPLAY key twice to return to the normal screen.

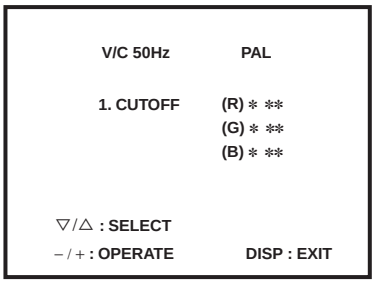

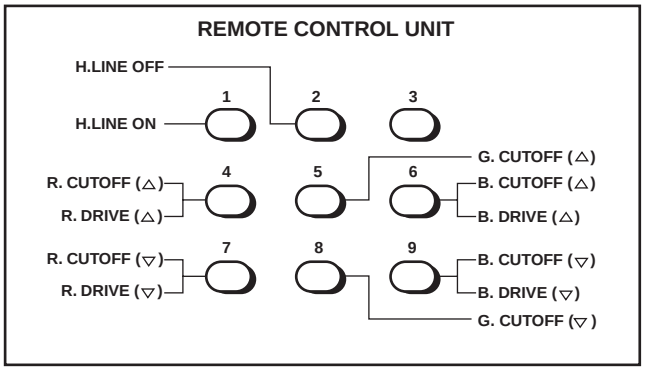

Setting (Adjustment) item		Variable range	Initial setting value
1. CUT OFF	R	–128 ~ +127	0
	G	–128 ~ +127	0
	B	–128 ~ +127	0

Adjustment of WHITE BALANCE (High light)	● **Signal generator** ● **Remote control unit**		**2. DRIVE (R)** **DRIVE (B)**	1. Receive a black and white signal (colour off). 2. Select **2. V/C** from the SERVICE MENU. 3. Select **2. DRIVE (R) / (B)** with MENU ▽/△ key, and set each value to initial setting value with **4** and **7** keys, or **6** and **9** keys on the remote control unit. 4. Use the keys **4** and **7** or **6** and **9** to produce a white screen. 5. Press the DISPLAY key twice to return to the normal screen.

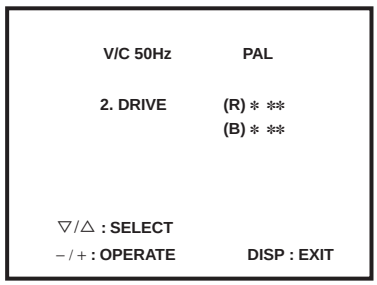

Setting (Adjustment) item		Variable range	Initial setting value
2. DRIVE	R	–128 ~ +127	0
	B	–128 ~ +127	0

Item	Measuring instrument	Test point	Adjustment part	Description
Adjustment of SUB BRIGHT	**Remote control unit**		**3. BRIGHT**	1. Receive any broadcast. 2. Select **2. V/C** from the SERVICE MENU. 3. Select **3. BRIGHT** with the MENU ▽/△ key. 4. Set the initial setting value with the MENU – or + key. 5. If the brightness is not the best with the initial set value, make fine adjustment until you get the best brightness. 6. Press the DISPLAY key twice to return to the normal screen.
Adjustment of SUB CONT.	**Remote control unit**		**4. CONT.**	1. Receive any broadcast. 2. Select **2. V/C** from the SERVICE MENU. 3. Select **4. CONT.** with the MENU ▽/△ key. 4. Set the initial setting value with the MENU – or + key. 5. If the contrast is not the best with the initial set value, make fine adjustment until you get the best contrast. 6. Press the DISPLAY key twice to return to the normal screen.
Adjustment of SUB COLOUR-I	**Remote control unit**		**5. COLOR**	**[Method of adjustment without measuring instrument]**
			PAL COLOUR	**(PAL COLOUR)** 1. Receive a PAL broadcast. 2. Select **2. V/C** from the SERVICE MENU. 3. Select **5. COLOUR** with the MENU ▽/△ key. 4. Set the initial setting value for PAL COLOUR with the MENU – or + key. 5. If the colour is not the best with the initial set value, make fine adjustment until you get the best colour. 6. Press the DISPLAY key twice to return to the normal screen.
			SECAM COLOUR	**(SECAM COLOUR)** 1. Receive a SECAM broadcast. 2. Make fine adjustment of SECAM COLOUR in the same way as for "PAL COLOUR".
			NTSC 3.58 COLOUR	**(NTSC 3.58 COLOUR)** 1. Receive a NTSC 3.58MHz broadcast. 2. Make similar fine adjustment of NTSC 3.58 COLOUR in the same way as for "PAL COLOUR".
				(NTSC 4.43 COLOUR) When adjustment is done for NTSC 3.58 COLOUR, appropriate values are automatically set for NTSC 4.43 COLOUR.

Item	Measuring instrument	Test point	Adjustment part	Description
Adjustment of SUB COLOUR-II	● **Signal generator** ● **Oscillo-scope** ● **Remote control unit**	**TP-47G** **TP-E (⏚)** **[CRT SOCKET PWB]**	**5. COLOUR**	**[Method of adjustment using measuring instrument]**
			PAL COLOUR	**(PAL COLOUR)** 1. Receive a PAL full field colour bar signal (75% white). 2. Select **2. V/C** from the SERVICE MENU. 3. Select **5. COLOUR** with the MENU ▽/△ key. 4. Set the initial setting value of PAL COLOUR with the MENU – or + key. 5. Connect the oscilloscope between TP-47G and TP-E. 6. Adjust PAL COLOUR to set the value **(A)** in the figure to **+12V (W & G).**
			SECAM COLOUR	**(SECAM COLOUR)** 1. Receive a SECAM full field colour bar signal (75% white). 2. Set the initial setting value of SECAM COLOUR with the MENU – or + key. 3. Adjust SECAM COLOUR to set the value **(A)** in the figure to **+9V (W & G)**.
			NTSC 3.58 COLOUR	**(NTSC 3.58 COLOUR)** 1. Receive a NTSC 3.58 full field colour bar signal (75% white). 2. Set the initial setting value of NTSC 3.58 COLOUR with the MENU – or + key. 3. Adjust NTSC 3.58 COLOUR to set the value **(A)** in the figure to **+12V (W & G).**
				(NTSC 4.43 COLOUR) When adjustment is done for NTSC 3.58 COLOUR, appropriate values are automatically set for NTSC 4.43 COLOUR.

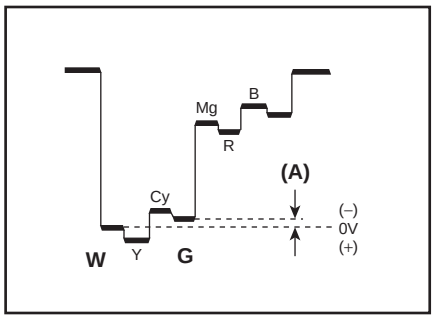

Item	Measuring instrument	Test point	Adjustment part	Description
Adjustment of SUB TINT-I	**Remote control unit**		**6. TINT**	**[Method of adjustment without measuring instrument]**
			NTSC 3.58 TINT	**(NTSC 3.58 TINT)** 1. Receive a NTSC 3.58 colour bar signal (full field colour bar 75% white). 2. Select **2. V/C** from the SERVICE MENU. 3. Select **6. TINT** with the MENU ▽/△ key. 4. Set the initial setting value of NTSC 3.58 with the MENU – or + key. 5. If you cannot get the best tint with the initial setting value, make fine adjustment until you get the best tint. 6. Press the DISPLAY key twice to return to the normal screen.
				(NTSC 4.43 COLOUR) When adjustment is done for NTSC 3.58 TINT, appropriate values are automatically set for NTSC 4.43 TINT.
Adjustment of SUB TINT-II	● **Signal generator** ● **Oscillo-scope** ● **Remote control unit**	**TP-47G** **TP-E (⏚)** **[CRT SOCKET PWB]**	**6. TINT**	**[Method of adjustment using measuring instrument]**
			NTSC 3.58 TINT	**(NTSC 3.58 TINT)** 1. Receive a NTSC 3.58 colour bar signal (full field colour bar 75% white). 2. Select **2. V/C** from the SERVICE MENU. 3. Select **6. TINT** with the MENU ▽/△ key. 4. Set the initial setting value of NTSC 3.58 with the MENU – or + key. 5. Connect the oscilloscope between TP-47G and TP-E. 6. Adjust NTSC 3.58 TINT to set the value **(B)** in the figure to **+10V (W & Cy).** 7. Press the DISPLAY key twice to return to the normal screen.
				(NTSC 4.43 TINT) When adjustment is done for NTSC 3.58 TINT, appropriate values are automatically set for NTSC 4.43 TINT.

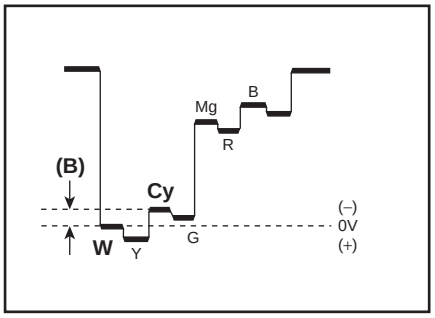

Item	Measuring instrument	Test point	Adjustment part	Description
Adjustment of BLACK OFFSET-I (SECAM)	**Remote control unit**			**[Method of adjustment without measuring instrument]**
			7. BLACK OFFSET (R-Y) (B-Y)	1. Receive a SECAM broadcast. 2. Select **2. V/C** from the SERVICE MENU. 3. Select **7. BLACK OFFSET** with the MENU ▽/△ key. 4. Set the initial setting value for BLACK OFFSET (R-Y) and (B-Y) with **4** and **7** or **6** and **9** keys on the remote control unit. 5. If the picture is not the best with the initial setting value, make fine adjustment until you get the best picture. 6. Press the DISPLAY key twice to return to the normal screen.
Adjustment of BLACK OFFSET-II (SECAM)	● **Signal generator** ● **Oscillo-scope** ● **Remote control unit**	**35 PIN (R-Y)** **36 PIN (B-Y)** **IC 201 on MAIN PWB**		**[Method of adjustment using measuring instrument]**
			7. BLACK OFFSET (R-Y) (B-Y)	1. Receive a SECAM COLOUR bar signal (full field colour bar 75% white). 2. Select **2. V/C** from the SERVICE MENU. 3. Select **7. BLACK OFFSET** with the ▽/△ key. 4. Connect the oscilloscope between pin **35** of IC 201 and TP-E. 5. By using **4** and **7** keys on the remote control unit, adjust the BLACK OFFSET (R-Y) so that the waveform changes from **(a)** to **(b)** as shown in the figure. 6. Connect the oscilloscope between pin **36** of IC 201 and TP-E. 7. By using **6** and **9** keys on the remote control unit, adjust the BLACK OFFSET (B-Y) so that the waveform changes from **(c)** to **(d)** as shown in the figure. 8. If the picture is not the best with the adjusted picture, make fine adjustment until you get the best picture. 9. Press the DISPLAY key twice to return to the normal screen.

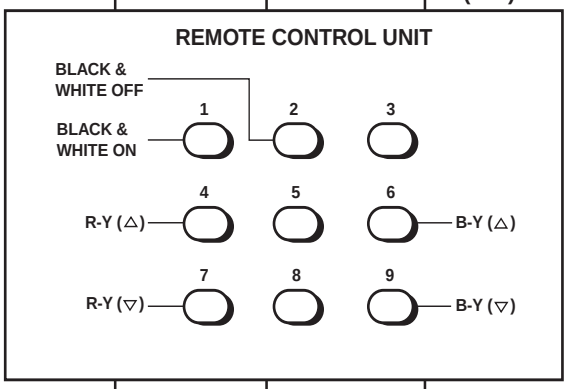

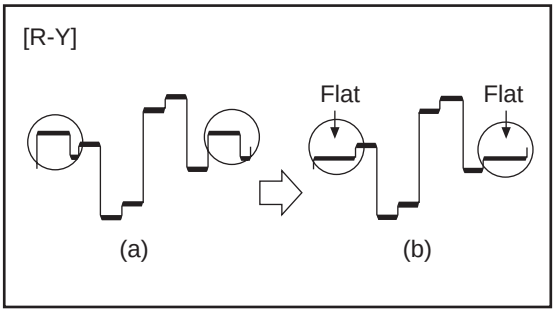

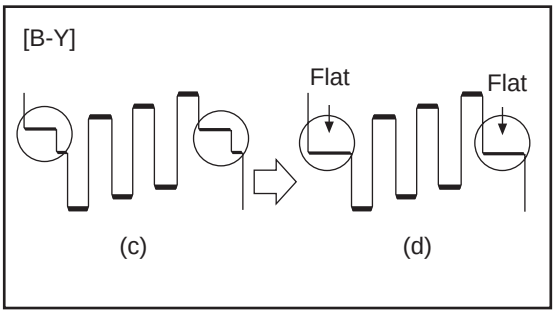

DEFLECTION CIRCUIT ADJUSTMENT

- There are 2 modes of adjustment (initial setting value) — 50Hz mode and 60Hz mode — depending upon the kind of signals (vertical frequency 50Hz / 60Hz).
- When adjusted in 50Hz mode, 60Hz mode will be automatically set.

The setting (adjustment) using the remote control unit is made on the basis of the initial setting values.
The setting values which adjust the screen to the optimum condition can be different from the initial setting values.

[SUB MENU 4. DEF]

Setting item	Adjustment name	Variable range	Initial setting value	
			50Hz	60Hz
2. V-SHIFT	Vertical center	–32 ~ +31	0	0
3. V. SIZE	Vertical height	–64 ~ +63	+5	–1
4. H-CENT	Horizontal center	–16 ~ +15	–12	–9
7. V-S. CR	Vertical height correction	–64 ~ +63	0	+1
10. V-LINE	Vertical linearity	–16 ~ +15	+1	–2

Item	Measuring instrument	Test point	Adjustment part	Description
Adjustment of V-SHIFT & V-SIZE	● **Signal generator** ● **Remote control unit**		**2. V-SHIFT** **3. V-SIZE**	**[fv : 50Hz mode]** 1. Receive a circle pattern signal of vertical frequency 50Hz. 2. Select **4. DEF** from the SERVICE MENU. 3. Select **2. V-SHIFT** with the MENU ▽/△ key. 4. Set the initial setting value of **2. V-SHIFT** with the MENU – / + key. 5. Adjust V-SHIFT to make "**A = B**" with the MENU – / + key. 6. Receive a cross-hatch signal. 7. Select **3. V-SIZE** with the MENU ▽/△ key. 8. Set the initial setting value of **3. V-SIZE** with the MENU – / + key. 9. Adjust V-SIZE and make the vertical screen size **92%** of the picture size with the MENU – / + key. (to be continued)

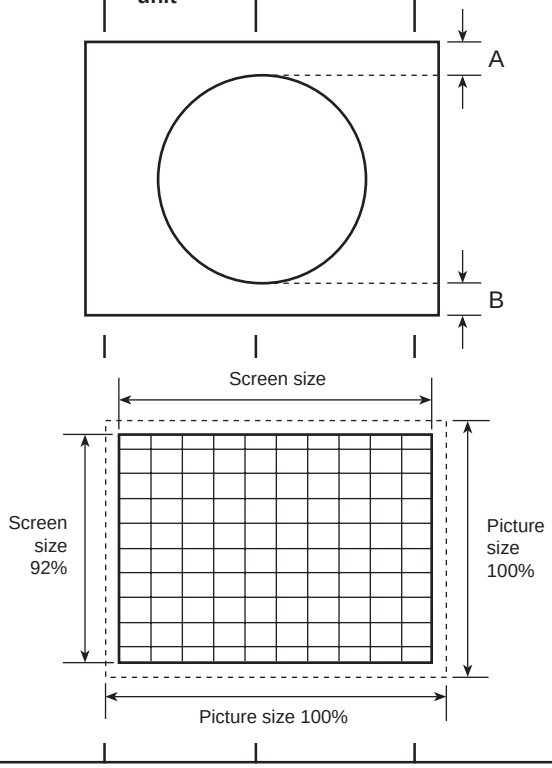

Item	Measuring instrument	Test point	Adjustment part	Description
Adjustment of H. CENTER			**4. H. CENT**	10. Receive a circle pattern signal. 11. Select **4. H-CENT** with the MENU ▽/△ key. 12. Set the initial setting value of **4. H. CENT** with the MENU – / + key. 13. Adjust H. CENT to make "**C = D**" with the MENU – / + key.
Adjustment of V-S.CR & V-LINE			**7. V-S.CR** **10. V-LINE**	● **When the vertical linearity has been deteriorated remarkably, perform the following steps.** 14. Receive a cross-hatch signal. 15. Select **7. V-S.CR** with the MENU ▽/△ key. 16. Set the initial setting value of **7. V-S.CR** with the MENU – / + key. 17. Select **10. V-LINE** with the MENU ▽/△ key. 18. Set the initial setting value of **10. V-LINE** with the MENU – / + key. 19. Adjust V-S.CR and V-LINE so that the spaces of each line on TOP, CENTER and BOTTOM become uniform.
				20. Make sure that the adjustment is properly done on the screen of 60Hz mode. 21. Press the DISPLAY key twice to return to the normal screen. **[NOTE]** ● When adjust in 60Hz mode, only 60Hz mode is adjust.

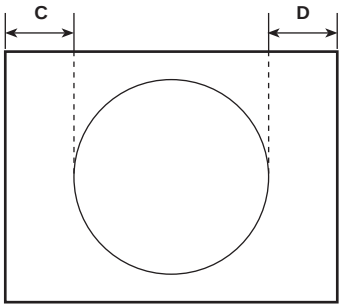

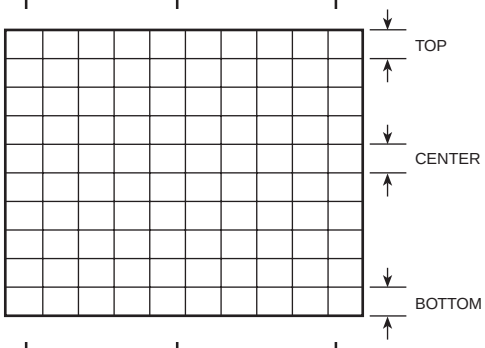

VSM PRESET ADJUSTMENT

Item	Measuring instrument	Test point	Adjustment part	Description
Setting of VSM PRESET	**Remote control unit**		**1. TINT** **2. COLOUR** **3. BRIGHT** **4. CONT.** **5. SHARP**	(VSM PRESET) 1. Select **5. VSM PRESET** from the SERVICE MENU. 2. Select BRIGHT with the PICTURE MODE key. 3. Adjust the MENU ▽/△ key and MENU – or + key to reset the set values of **1. TINT ~ 5. SHARP** to the values shown in the table. 4. Respectively select the VSM PRESET mode for SOFT and STANDARD, and make similar adjustment as in 3 above. 5. Press the DISPLAY key twice to return to the normal screen.

SUB MENU 5. VSM PRESET

```
VSM PRESET     BRIGHT

1. TINT   ***

▽/△ : SELECT
–/+ : OPERATE          DISP : EXIT
```

[Setting Values for SUB MENU 5. VSM PRESET]

VSM preset mode / VSM Setting item	BRIGHT	STANDARD	SOFT
1. TINT SETTING VALUE	0	←	←
2. COLOUR SETTING VALUE	0	←	←
3. BRIGHT SETTING VALUE	0	←	←
4. CONT. SETTING VALUE	+15	+4	–4
5. SHARP SETTING VALUE	0	←	–3

: Do not adjust.

AUDIO ADJUSTMENT

- Do not adjust **3. AUDIO** (1. ERROR LIMIT, 2. A2 ID THR, 3. SOUND SYSTEM) in the SERVICE MENU as it requires no adjustment.

[SUB MENU 3. AUDIO]

Setting item	Variable range	Initial setting value (fixed)
1. ERROR LIMIT **(Do not adjust.)**	00H ~ FFH	100H
2. A2 ID THR **(Do not adjust.)**	00H ~ FFH	14H
3. SOUND SYSTEM **(Do not adjust.)**	—	—

: Do not adjust.

CENTER ADJUSTMENT

- Do not adjust **6. CENTER** (TREBLE, BASS) in the SERVICE MENU as it requires no adjustment.

[SUB MENU 6. CENTER]

Setting item	Initial setting value (fixed)
TREBLE **(Do not adjust.)**	+2
BASS **(Do not adjust.)**	0

: Do not adjust.

SELF-CHECK FUNCTIONS

1. Outline

This model has self-check functions given below. When an abnormality has been detected, the SUB POWER is turned off and the ON TIMER LED flashes to inform of the failure. An abnormality is detected by the signal input state of the control line connected to the microcomputer.

2. Self-check items

Check item	Details of detection	Method of detection	State of abnormality
Over-current protection	An over-current on the low B line is detected.	The main microcomputer detects the possible abnormality at 30-msec. intervals and judges the results in every 16 time. Of the 16 times, if NG is detected more than 9 times, it is judged that there is an abnormality.	When an abnormality has been detected, the SUB-POWER is turned off. While the SUB-POWER is being turned off, the POWER key on the remote control unit is not operational until the power cord is taken out and put in again.
CRT NECK protection	Operation of CRT NECK protection circuit	DITTO	DITTO

3. Self-check indicating function

When an abnormality has been detected at about 5 seconds after the power is turned on, the SUB POWER is turned off immediately and the ON TIMER LED flashes.

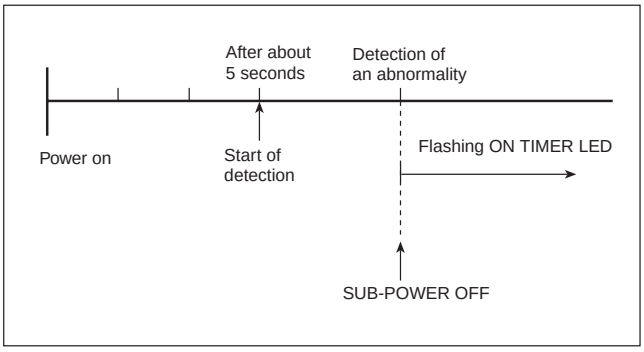

[Indication by the LED]

Item	LED flashing intervals	Priority of detection
① Over-current protection	At 0.2-second intervals	1
② CRT NECK protection	At 1-second intervals	2

Note: In case of ① + ②, the item ① will be indicated.

STANDARD CIRCUIT DIAGRAM

■ NOTE ON USING CIRCUIT DIAGRAMS

1. SAFETY

The components identified by the ⚠ symbol and shading are critical for safety. For continued safety replace safety critical components only with manufactures recommended parts.

2. SPECIFIED VOLTAGE AND WAVEFORM VALUES

The voltage and waveform values have been measured under the following conditions.

(1) Input signal : Colour bar signal
(2) Setting positions of each knob/button and variable resistor
: Original setting position when shipped
(3) Internal resistance of tester : DC 20kΩ/V
(4) Oscilloscope sweeping time : H → 20μS/div
: V → 5mS/div
: Others → Sweeping time is specified.
(5) Voltage values : All DC voltage values

* Since the voltage values of signal circuit vary to some extent according to adjustments, use them as reference values.

3. INDICATION OF PARTS SYMBOL [EXAMPLE]

● In the PW board : R1209 → R209

4. INDICATIONS ON THE CIRCUIT DIAGRAM

(1) Resistors

● Resistance value
No unit : [Ω]
K : [KΩ]
M : [MΩ]

● Rated allowable power
No indication : 1/4 [W]
Others : As specified

● Type
No indication : Carbon resistor
OMR : Oxide metal film resistor
MFR : Metal film resistor
MPR : Metal plate resistor
UNFR : Non-flammable resistor
FR : Fusible resistor

* Composition resistor 1/2 [W] is specified as 1/2S or Comp.

(2) Capacitors

● Capacitance value
1 or higher : [pF]
less than 1 : [μF]

● Withstand voltage
No indication : DC50 [V]
AC indicated : AC withstand voltage [V]
Others : DC withstand voltage [V]

* Electrolytic Capacitors
47/50 [Example]: Capacitance value [μF]/withstand voltage [V]

● Type
No indication : Ceramic capacitor
MY : Mylar capacitor
MM : Metalized mylar capacitor
PP : Polypropylene capacitor
MPP : Metalized polypropylene capacitor
MF : Metalized film capacitor
TF : Thin film capacitor
BP : Bipolar electrolytic capacitor
TAN : Tantalum capacitor

(3) Coils

No unit : [μH]
Others : As specified

(4) Power Supply

: B1
: 12V
: 9V
: 5V

* Respective voltage values are indicated.

(5) Test point

: Test point
: Only test point display

(6) Connecting method

: Connector
: Wrapping or soldering
: Receptacle

(7) Ground symbol

⊥ : LIVE side ground
: ISOLATED (NEUTRAL) side ground
: EARTH ground
: DIGITAL ground

5. NOTE FOR REPAIRING SERVICE

This model's power circuit is partly different in the GND. The difference of the GND is shown by the LIVE : (⊥) side GND and the ISOLATED (NEUTRAL) : (⏚) side GND. Therefore, care must be taken for the following points.

(1) Do not touch the LIVE side GND or the LIVE side GND and the ISOLATED (NEUTRAL) side GND simultaneously. If the above caution is not respected, an electric shock may be caused. Therefore, make sure that the power cord is surely removed from the receptacle when, for example, the chassis is pulled out.
(2) Do not short between the LIVE side GND and ISOLATED (NEUTRAL) side GND or never measure with a measuring apparatus (oscilloscope, etc.) the LIVE side GND and ISOLATED (NEUTRAL) side GND at the same time. If the above precaution is not respected , a fuse or any parts will be broken.

● **Since the circuit diagram is a standard one, the circuit and circuit constants may be subject to change for improvement without any notice.**

CONTENTS

SEMICONDUCTOR SHAPES 2-4

BLOCK DIAGRAM 2-5

CIRCUIT DIAGRAMS

MAIN PWB CIRCUIT DIAGRAM 2-7
AV SW PWB CIRCUIT DIAGRAM 2-9
IF PWB CIRCUIT DIAGRAM 2-11
CRT SOCKET PWB CIRCUIT DIAGRAM 2-13
FRONT CONTROL PWB CIRCUIT DIAGRAM 2-15

PATTERN DIAGRAMS

FRONT CONTROL PWB PATTERN 2-16
MAIN PWB PATTERN 2-17
AV SW PWB PATTERN 2-19
IF PWB PATTERN 2-20
CRT SOCKET PWB PATTERN 2-21

SEMICONDUCTOR SHAPES

TRANSISTOR

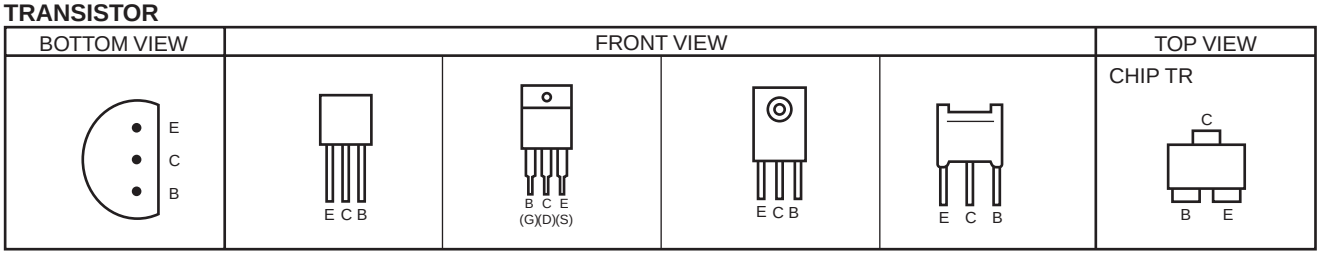

IC

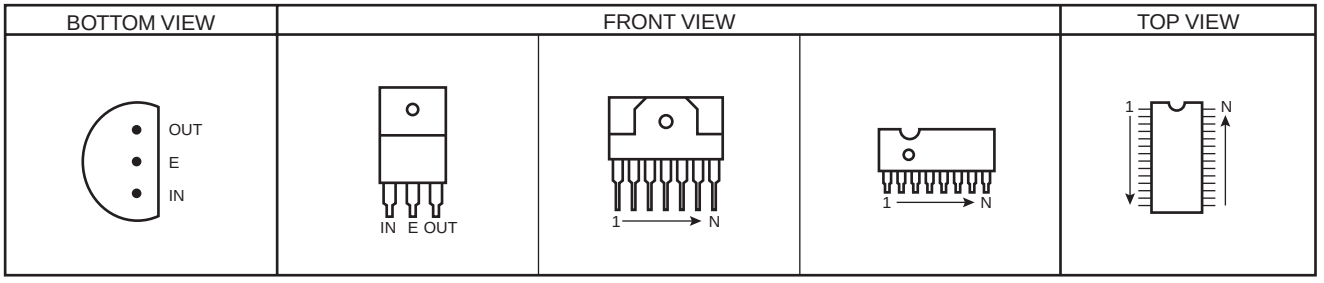

CHIP IC

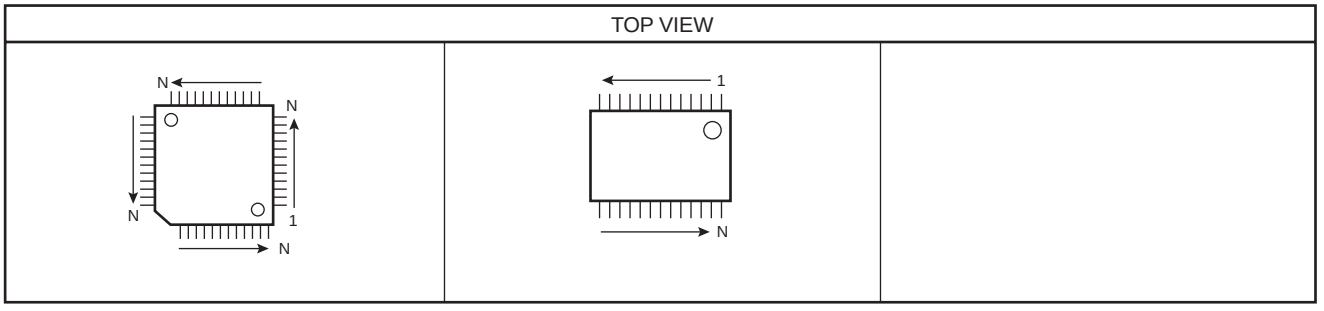

BLOCK DIAGRAM

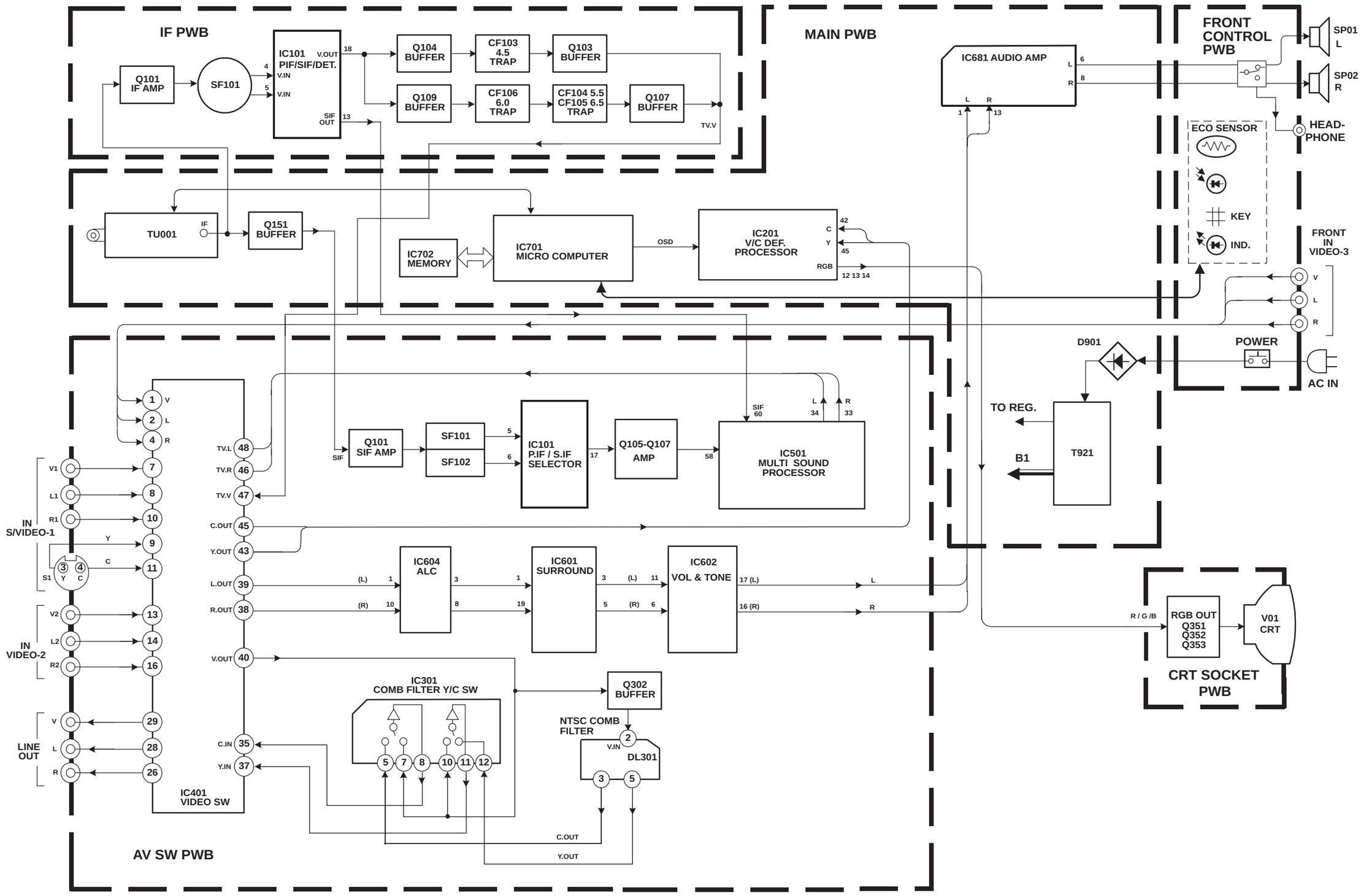

CIRCUIT DIAGRAMS *MAIN PWB CIRCUIT DIAGRAM*

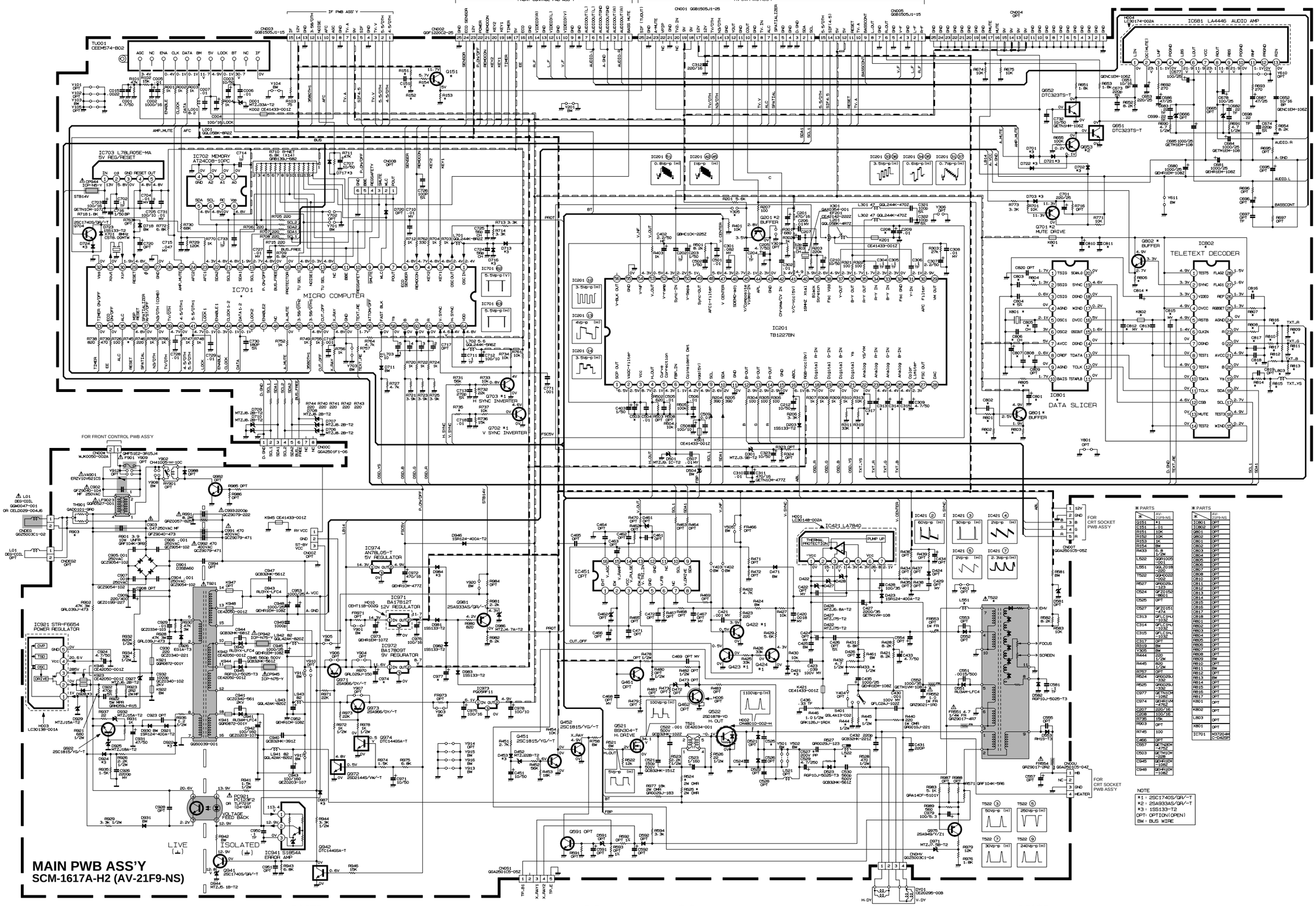

NOTE
*1 : 2SC1740S/GR/-T
*2 : 2SA933AS/GR/-T
*3 : 1SS133-T2
OPT: OPTION(OPEN)
BW : BUS WIRE

AV SW PWB CIRCUIT DIAGRAM

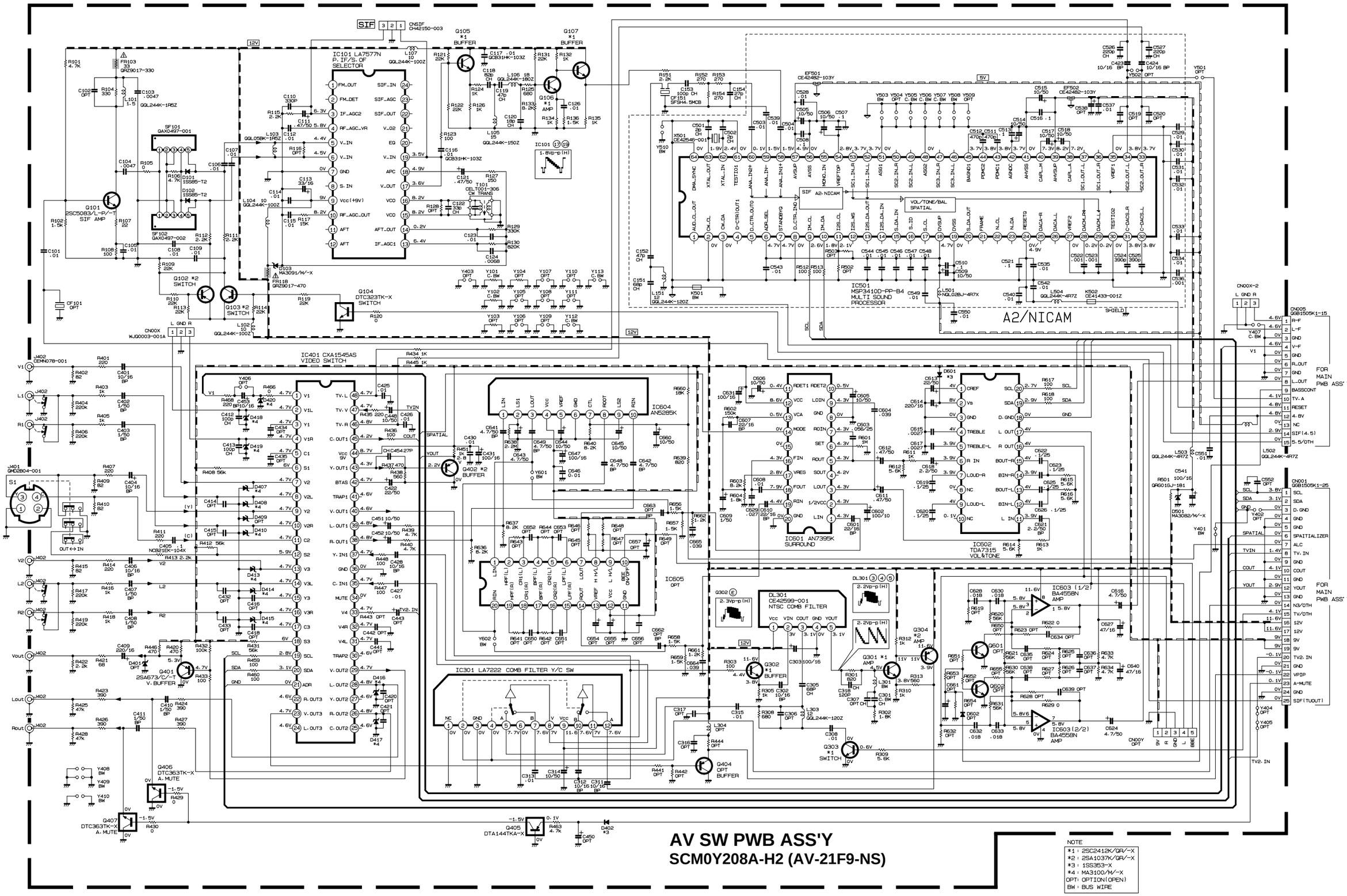

IF PWB CIRCUIT DIAGRAM

*PARTS

*	AV-21F9 -NS
C113	OPT
C124	OPT
Q111	OPT
R113	0
SF102	OPT
C601	OPT
C602	OPT
C603	OPT
C604	OPT
C606	OPT
C607	OPT
C608	OPT
C609	OPT
C610	OPT
C611	OPT
C612	OPT

*PARTS

*	AV-21F9 -NS
CF601	OPT
CF604	OPT
CF606	OPT
CF608	OPT
L601	OPT
Q601	OPT
Q602	OPT
Q603	OPT
Q604	OPT
Q605	OPT
Q606	*2
Q608	OPT

*PARTS

*	AV-21F9 -NS
R601	OPT
R602	OPT
R604	OPT
R605	OPT
R606	OPT
R607	OPT
R608	OPT
R609	OPT
R610	OPT
R611	OPT
R612	OPT
R615	OPT
R616	OPT
R617	OPT
R619	1k
R620	OPT

*PARTS

*	AV-21F9 -NS
R621	OPT
R622	OPT
R623	OPT
R624	OPT
R625	OPT
R626	OPT
R627	OPT
R628	OPT
C130	OPT
C131	OPT

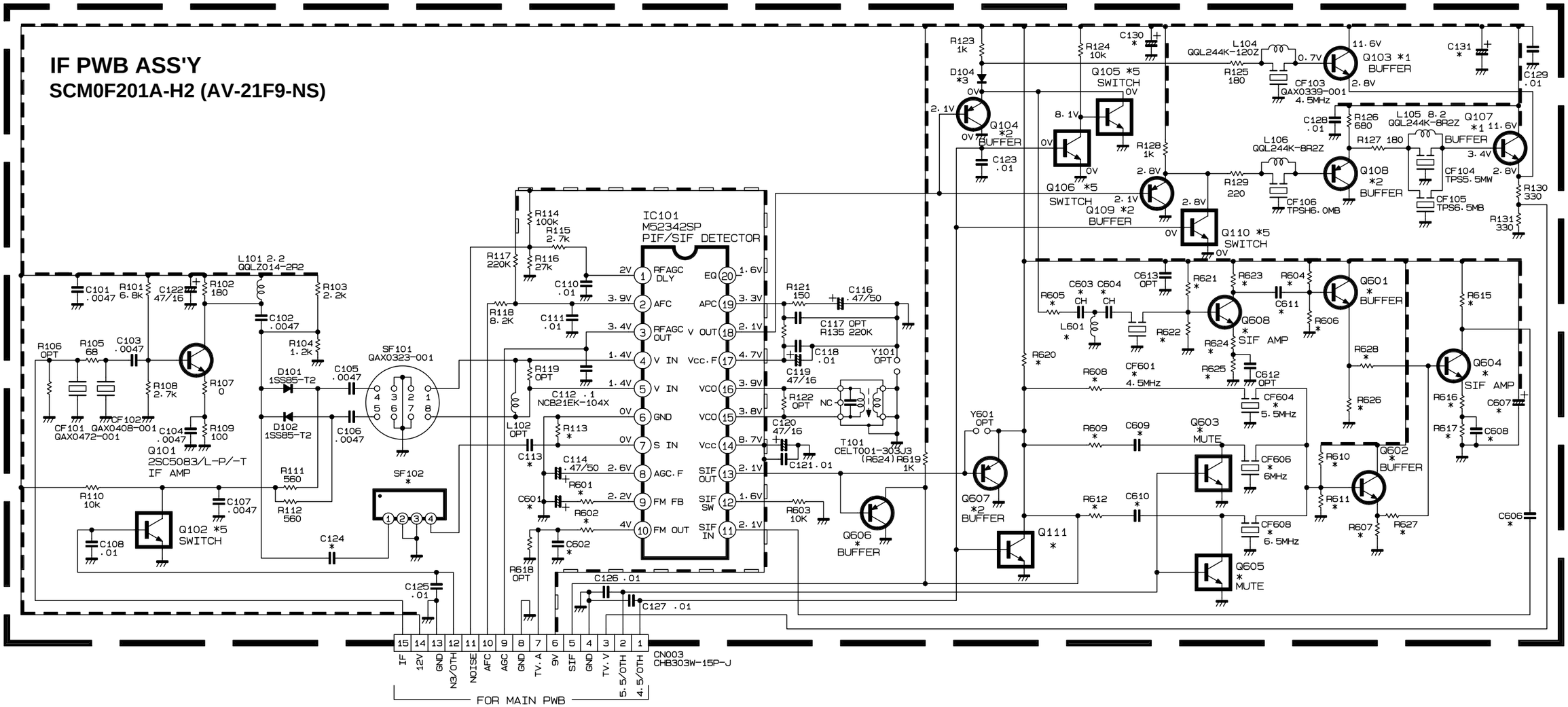

CRT SOCKET CIRCUIT DIAGRAM

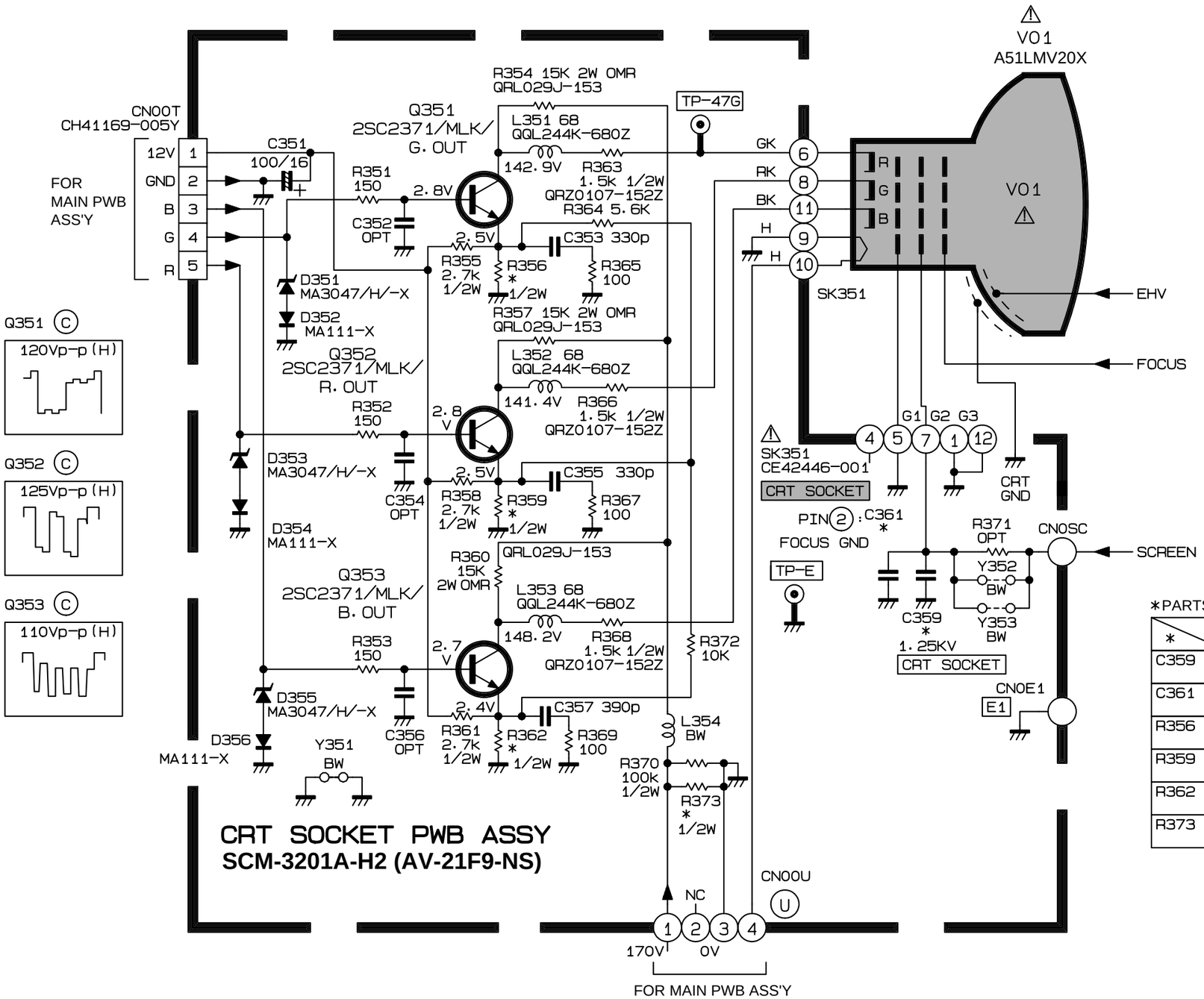

*PARTS

*	AV-21F9 -NS
C359	QFZ0097 -223
C361	QFZ0097 -223
R356	330 1/2W
R359	330 1/2W
R362	330 1/2W
R373	100k 1/2W

Locations

Locations of remote control buttons

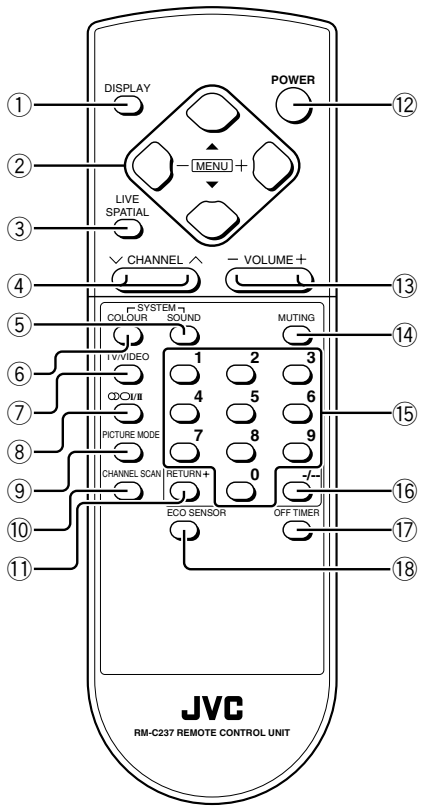

① DISPLAY button	p.21
② MENU buttons • MENU ▲/▼ buttons • MENU –/+ buttons	
③ LIVE SPATIAL button	p.17
④ CHANNEL ∨/∧ buttons	p.13
⑤ SOUND SYSTEM button	p.16
⑥ COLOUR SYSTEM button	p.16
⑦ TV/VIDEO button	p.15
⑧ Multi Sound button	p.17
⑨ PICTURE MODE button	p.16
⑩ CHANNEL SCAN button	p.22
⑪ RETURN + button	p.22
⑫ POWER button	p.6,13,14
⑬ VOLUME –/+ buttons	p.14
⑭ MUTING button	p.17
⑮ Number buttons	p.13
⑯ -/-- button	p.13
⑰ OFF TIMER button	p.21
⑱ ECO SENSOR button	p.21

Locations of front panel buttons and lamps

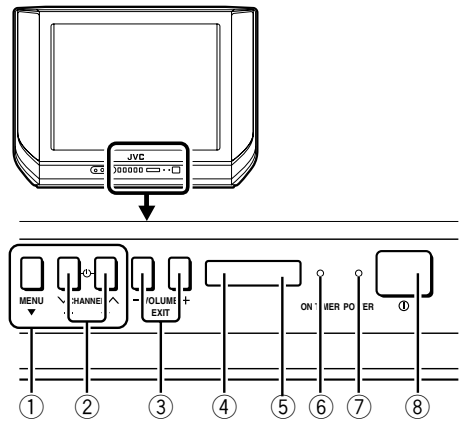

① MENU buttons • MENU button • MENU –/+ buttons	p.26
② CHANNEL ∨/∧ buttons	p.14
③ VOLUME –/+ buttons	p.14
④ ECO sensor	
⑤ Remote control sensor	
⑥ ON TIMER lamp	p.23
⑦ POWER lamp	p.6,13,14
⑧ Main power button	p.6,14