PIONEER®
The Art of Entertainment

Service Manual

ORDER NO.
ARP2957

PROJECTION MONITOR RECEIVER

SD-P62A3-K

● **Refer to the service manual ARP2952 for SD-P50A3-K and SD-P55A3-K.**

THIS MANUAL IS APPLICABLE TO THE FOLLOWING MODEL(S) AND TYPE(S).

Type	Model	Power Requirement	Remarks
	SD-P62A3-K		
KUXC	○	AC120V	

CONTENTS

PIONEER ELECTRONIC CORPORATION 4-1, Meguro 1-Chome, Meguro-ku, Tokyo 153, Japan
PIONEER ELECTRONICS SERVICE, INC. P.O. Box 1760, Long Beach, CA 90801-1760, U.S.A.
PIONEER ELECTRONIC (EUROPE) N.V. Haven 1087, Keetberglaan 1, 9120 Melsele, Belgium
PIONEER ELECTRONICS ASIACENTRE PTE. LTD. 501 Orchard Road, #10-00 Lane Crawford Place, Singapore 0923

O - IZG APR. 1997 Printed in Belgium

1. CONTRAST OF ELECTRICAL PARTS

NOTES:
- *Parts marked by "NSP" are generally unavailable because they are not in our Master Spare Parts List.*
- *The ⚠ mark found on some component parts indicates the importance of the safety factor of the part. Therefore, when replacing, be sure to use parts of identical designation.*
- *When ordering resistors, first convert resistance values into code form as shown in the following examples.*

  Ex.1 When there are 2 effective digits (any digit apart from 0), such as 560 ohm and 47k ohm (tolerance is shown by J=5%, and K=10%).

  560 Ω → 56 × 10¹ → 561 ..... RD1/4PU [5][6][1] J
  47k Ω → 47 × 10³ → 473 ..... RD1/4PU [4][7][3] J
  0.5 Ω → R50 ..... RN2H [R][5][0] K
  1 Ω → 1R0 ..... RS1P [1][R][0] K

  Ex.2 When there are 3 effective digits (such as in high precision metal film resistors).

  5.62k Ω → 562 × 10¹ → 5621 ..... RN1/4PC [5][6][2][1] F
- *Parts marked by ☆ are important parts which relate in X-rays radiation. If any of these parts need to be replaced, always replace with specified parts.*
- *Parts marked by × are important parts which relate in X-rays radiation. If a failure occurs in any of these parts, replace the printed circuit board assembly where the relevant part has already been adjusted as a working component. Do not replace the actual part itself. If any part marked by × is replaced, there is danger of being exposed to X-rays.*

1.1 CONTRAST OF ELECTRICAL PARTS

SD-P62A3-K/KUXC and SD-P50A3-K/KUXC have the same construction except for the following :

Mark	Symbol & Description	Part No.		Remarks
		SD-P50A3-K/KUXC	SD-P62A3-K/KUXC	
	AMP ASSY └ AMP ASSY	AWV1611 AWZ6190	AWV1626 AWZ6204	

AMP ASSY (AWZ6204)

AWZ6204 and AWZ6190 have the same construction except for the following :

Mark	Symbol & Description	Part No.		Remarks
		AWZ6190	AWZ6204	
	R1461, R1465 C1419, C1428 C1444, C1445	RD1/4PU223J CEAS331M25 CKCYB332K50	Not used CEAS102M25 Not used	

2. EXPLODED VIEWS AND PARTS LIST

NOTES: • Parts marked by "NSP" are generally unavailable because they are not in our Master Spare Parts List.
• The ⚠ mark found on some component parts indicates the importance of the safety factor of the part. Therefore, when replacing, be sure to use parts of identical designation.
• Parts marked by ☆ are important parts which relate in X-rays radiation. If any of these parts need to be replaced, always replace with specified parts.
• Screws adjacent to ▼ mark on the product are used for disassembly.

2.1 PACKING

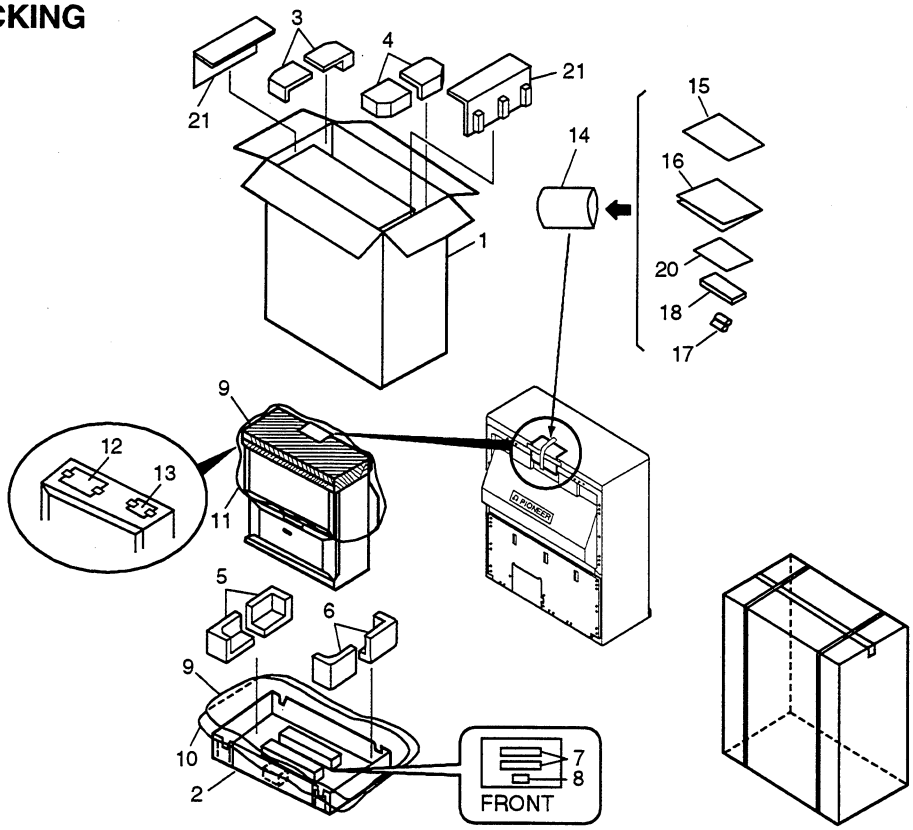

Parts List

Mark	No.	Description	Part No.
	1	Upper Carton	AHD2886
	2	Under Carton	AHD2889
	3	Upper Pad L	AHA2171
	4	Upper Pad R	AHA2172
	5	Under Pad L	AHA2173
	6	Under Pad R	AHA2174
	7	Under Cushion	AHA2177
	8	Under Cushion A	AHA2178
NSP	9	Packing Sheet	AHG1269
NSP	10	Vinyl Sheet	AHG1271
NSP	11	Vinyl Sheet	AHG1267
	12	CONVER Attention Card	ARM1120
	13	Caster Caution Card	ARM1117
NSP	14	Literature Bag	AHG1222
NSP	15	Warranty Card	ARY1050
	16	Operating Instructions (English)	ARB1510
NSP	17	Alkaline Dry Cell Battery (LR6, AA)	AEX1018
	18	Remote Control Unit (CU-SD103)	AXD1429
	19	Battery Cover	AZA7031
NSP	20	Caution Card	ARM1057
	21	Clamp Spacer	AHB1185

2.2 FRONT VIEW (1)

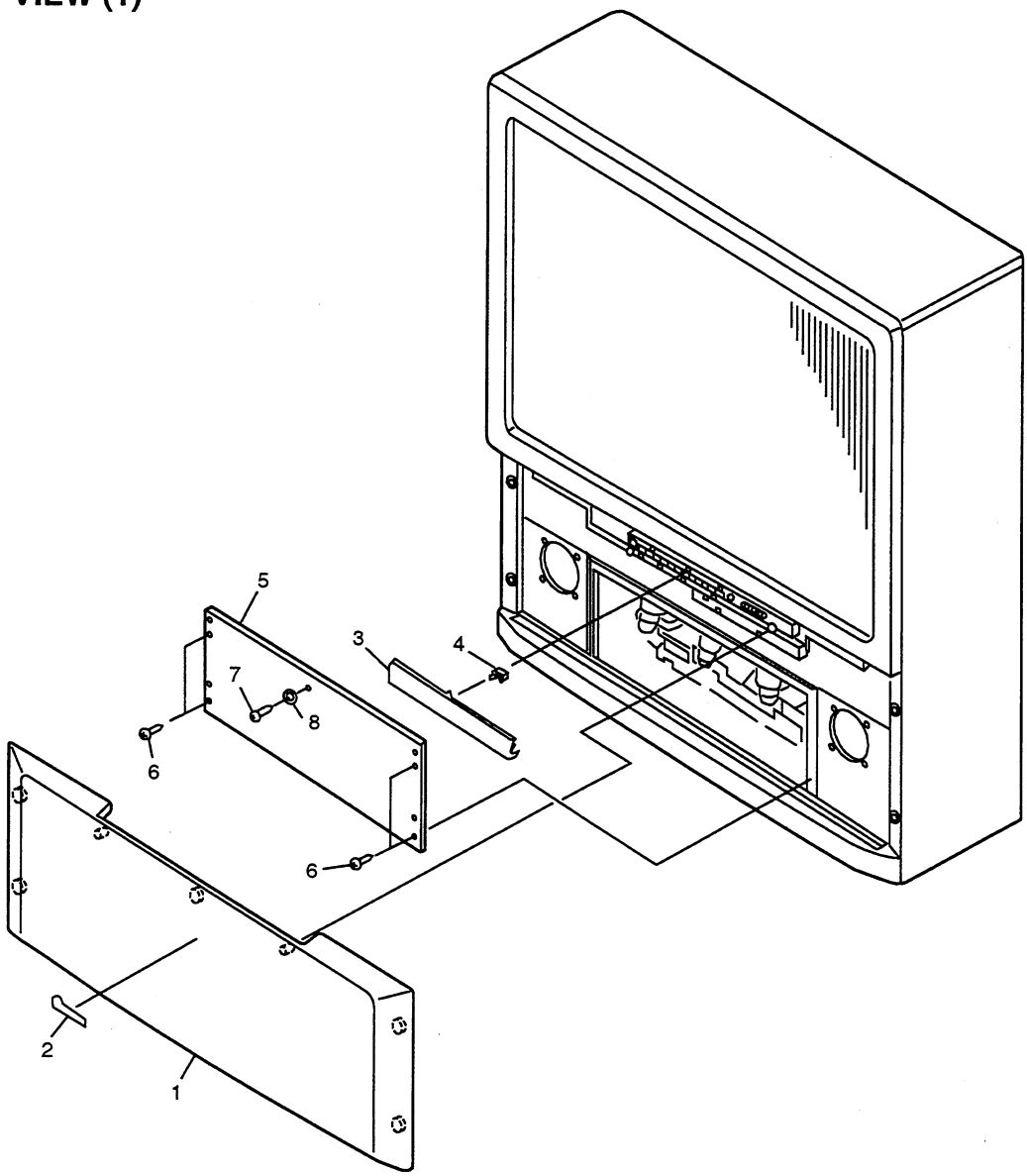

Parts List

Mark	No.	Description	Part No.
	1	Grille	AMR2919
	2	Badge	AAM1074
	3	Door	AAN1433
	4	Catcher	AEC1609
	5	Blind Plate	AMM2787
	6	Screw	ABA1241
	7	Screw	BYC35P160FZK
	8	Magic Tape	AEC1394

2.3 SCREEN FRAME BLOCK

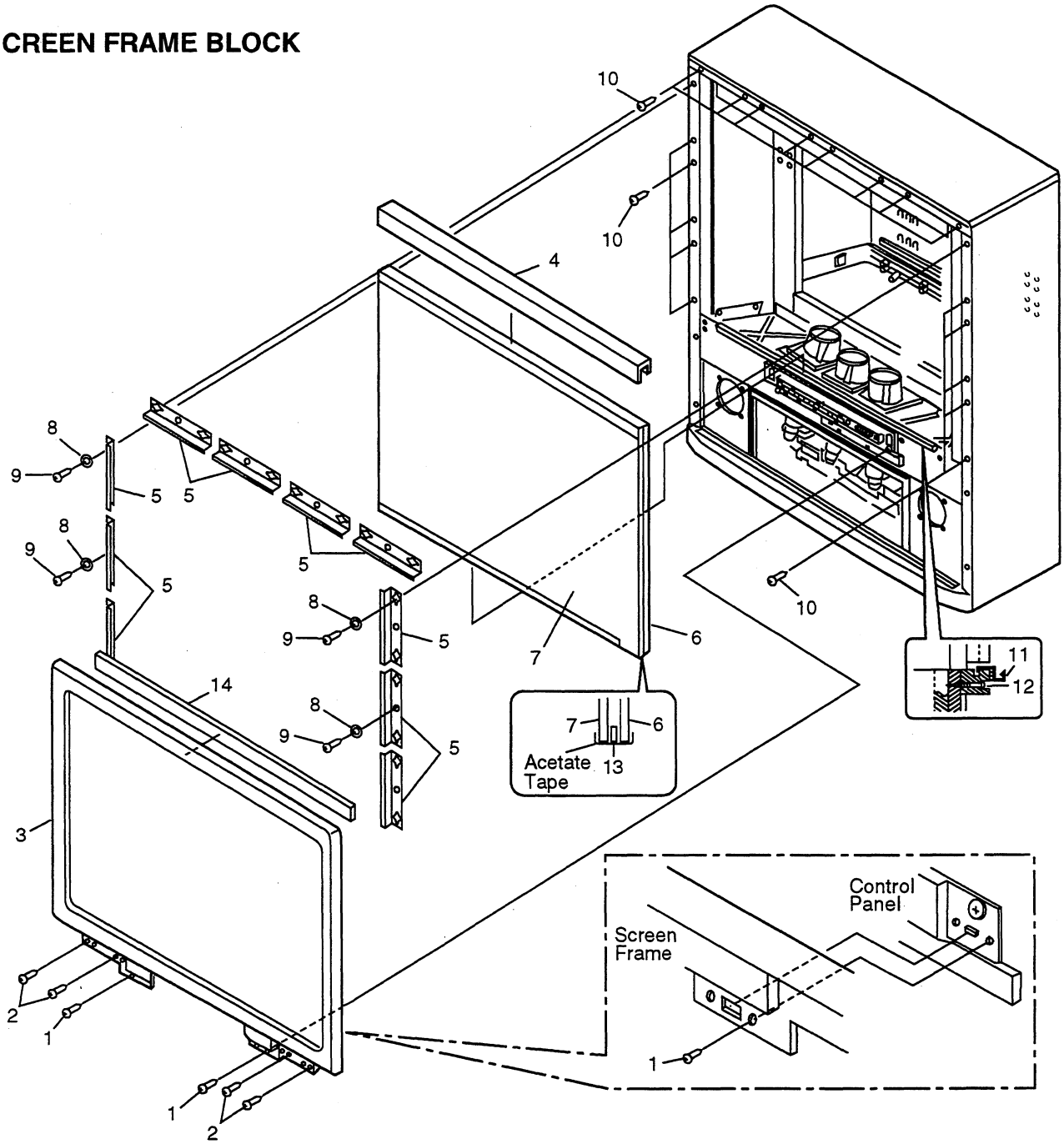

Parts List

Mark	No.	Description	Part No.
	1	Screw	ABA1249
	2	Screw	ABA1239
	3	Screen Frame	AMB2601
	4	Screen Holder (Top)	AAP1569
NSP	5	SH Holder	ANG2172
	6	Fresnel	AMR2945
	7	Lenticular Sheet	AMR2942
	8	Magic Tape	AEC1394
	9	Screw	BYC35P160FZK
	10	Screw	ABA1240
	11	Screen Holder (Low)	AAP1572
	12	Screw	ABA1241
	13	Spacer 62	AEC1725
NSP	14	Cushion A	AEC1712

2.4 FRONT VIEW (2)

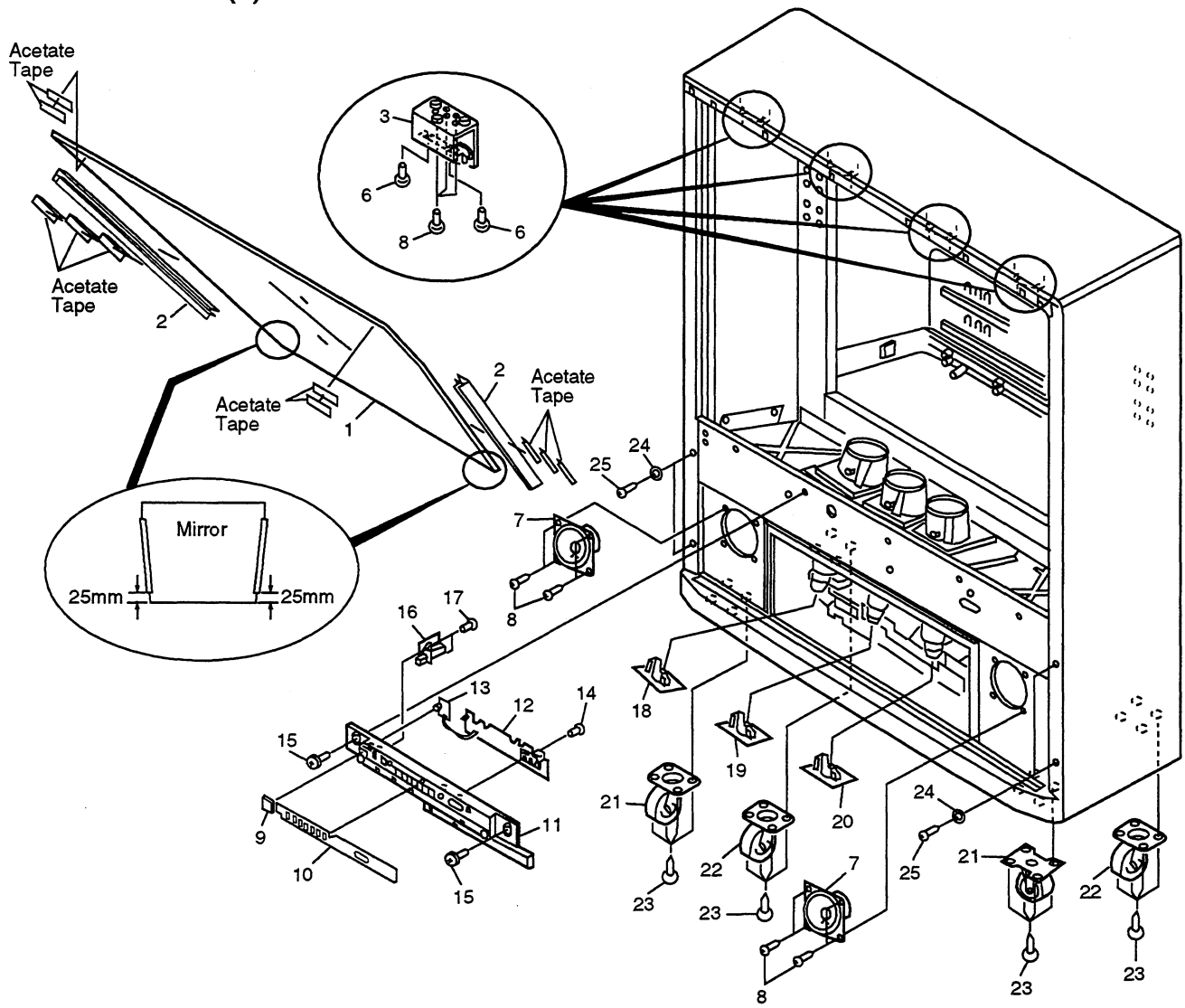

Parts List

Mark	No.	Description	Part No.
	1	Mirror	AMR2939
NSP	2	Mirror Frame	ANG2176
	3	Mirror Holder	AMR2920
	4	•••••	
	5	•••••	
	6	Screw	ABA1239
	7	Speaker	APV1023
	8	Screw	ABA1240
	9	Indicator Panel	AAK2687
	10	Control Sheet	AAK2686
	11	Control Panel	AMB2602
	12	Front Control Assy	AWZ6186
	13	Indicator Assy	AWZ6187
	14	Screw	ABZ30P120FZK
	15	Screw	ABA1234

Mark	No.	Description	Part No.
	16	POWER SW Assy	AWZ6188
	17	Screw	BPZ30P120FMC
	18	R. CRT AMP Assy	AWZ6191
	19	G. CRT AMP Assy	AWZ6192
	20	B. CRT AMP Assy	AWZ6193
	21	Caster (Front)	AMR2863
	22	Caster (Rear)	AMR2547
	23	Screw	ABA1126
	24	Magic Tape	AEC1394
	25	Screw	BYC35P160FZB

2.5 REAR VIEW (1)

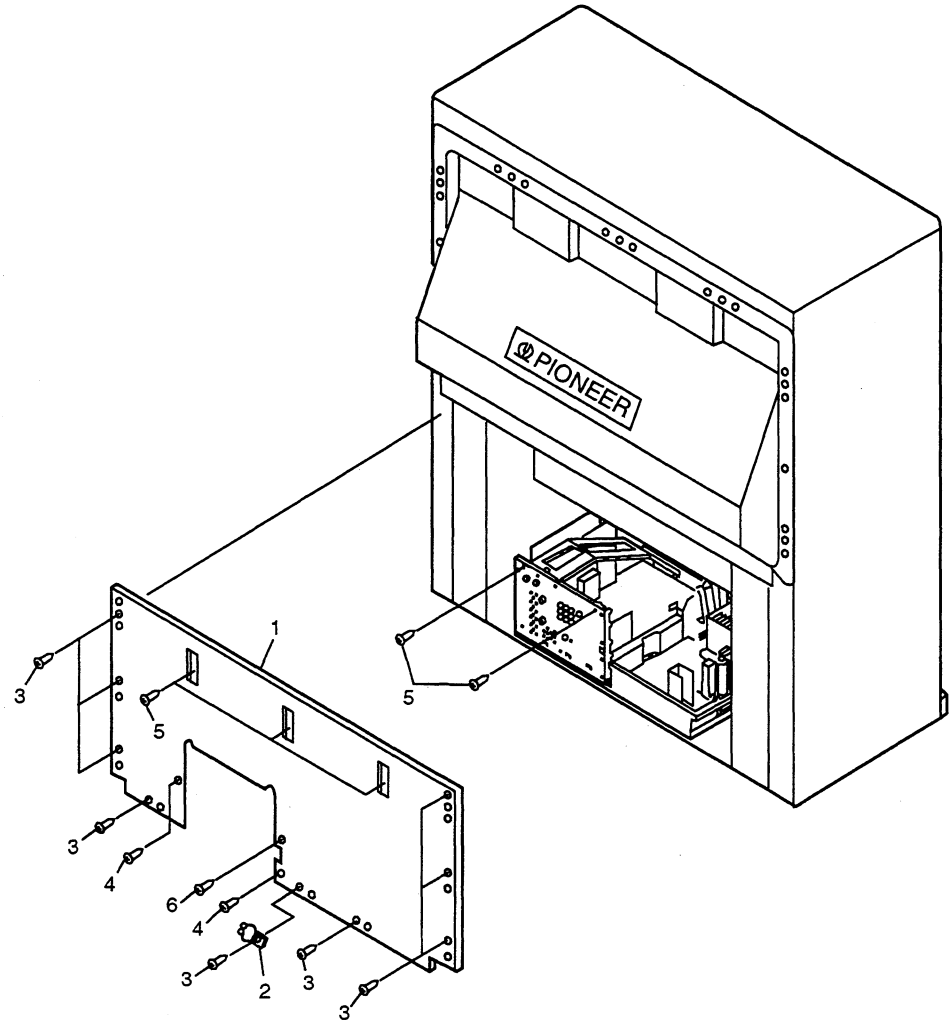

Parts List

Mark	No.	Description	Part No.
	1	Rear Cover	AMM2790
NSP	2	Purse Lock	AEC1263
	3	Screw	ABA1240
	4	Screw	ABA1235
	5	Screw	ABA1149
	6	Screw	ABZ30P120FZK

2.6 REAR VIEW (2)

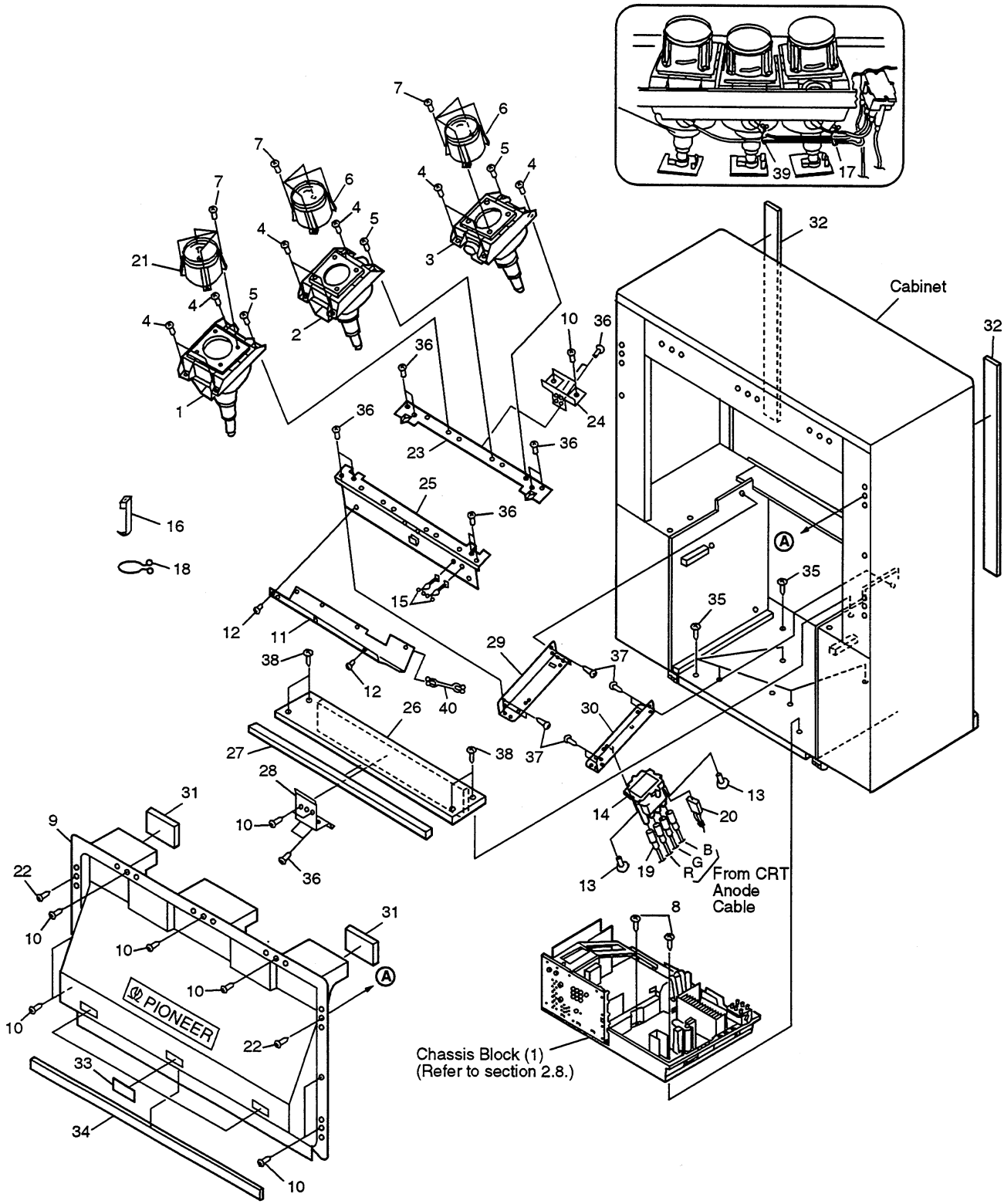

Parts List

Mark	No.	Description	Part No.
☆	1	CRT Service Assy B	AWY1393
☆	2	CRT Service Assy G	AWY1388
☆	3	CRT Service Assy R	AWY1392
	4	Screw	ABA1168
	5	Screw	FBT40P120FZK
☆	6	Lens Assy	AMR2833
	7	Screw	AMZ40P080FZK
	8	Screw	BYC40P350FZK
	9	Mirror Case	AME2296
	10	Screw	ABA1240
NSP	11	Tray	AMR2936
	12	Screw	ABZ30P120FZK
	13	Screw	BBZ40P120FZK
⚠NSP	14	HV Distributor	AXW1046
NSP	15	Lead Clamper M	AEC1611
	16	Binder	AEC-093
	17	Purse Lock	AEC1540
NSP	18	Purse Lock L	AEC1422
	19	HV Cable (J26)	ADY1032
	20	HV Return Wire (J27)	ADX2338
☆	21	Lens Assy	AMR2948
	22	Screw	PYC40T140FZB
NSP	23	CRT Front Frame	ANA1541
NSP	24	CRT Front Holder	ANG2118
NSP	25	CRT Rear Frame	ANA1542
NSP	26	Rear Cover Panel	AMM2788
	27	Rear Cover Cushion	AEC1718
NSP	28	CRT Rear Holder	ANG2119
NSP	29	CRT Stand Holder R	ANA1497
NSP	30	CRT Stand Holder L	ANA1496
NSP	31	Mirror Cushion	AEC1701
	32	Screen Cushion	AEC1702
	33	Blind Sheet	AEC1622
	34	Mirror Cushion	AEC1627
	35	Screw	ABA1234
	36	Screw	ACZ40P080FMC
	37	Screw	PMB50P250FZB
	38	Screw	ABA1241
NSP	39	Purse Lock S	AEC1261
	40	Cable Clip	AEC1708

2.7 CRT BLOCK

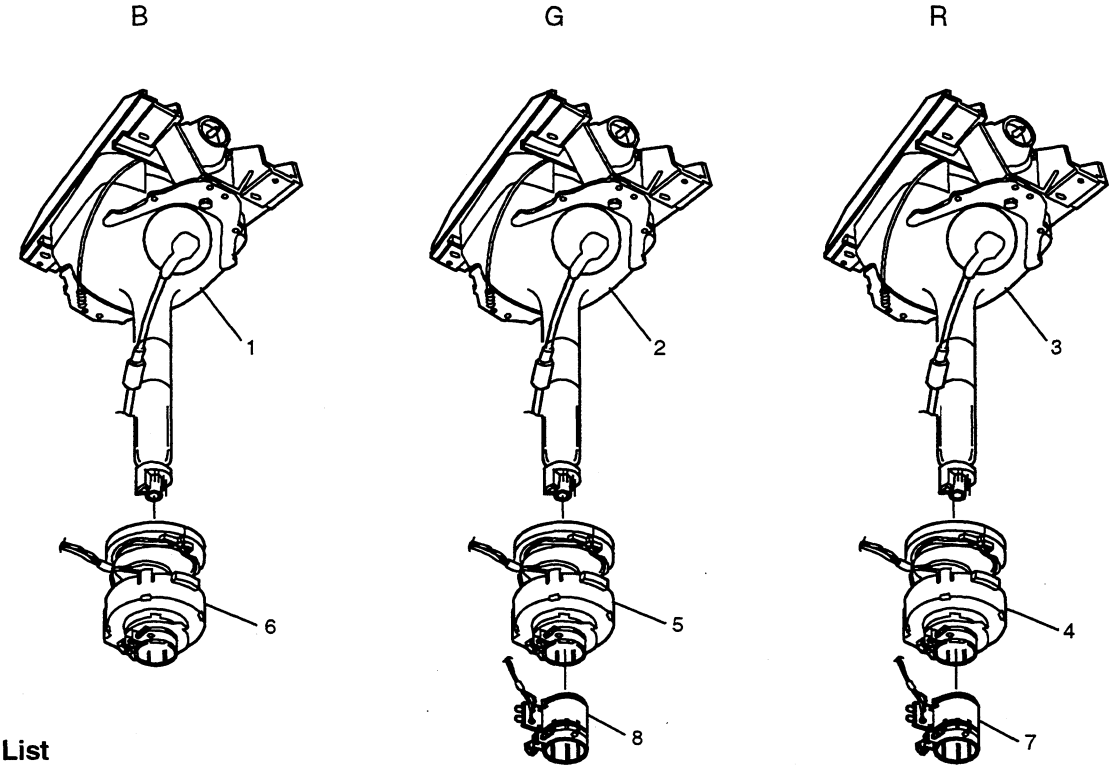

Parts List

Mark	No.	Description	Part No.
☆	1	CRT Service Assy B	AWY1393
☆	2	CRT Service Assy G	AWY1388
☆	3	CRT Service Assy R	AWY1392
⚠	4	Deflection Yoke (L2)	ATL1130
⚠	5	Deflection Yoke (L3)	ATL1130
⚠	6	Deflection Yoke (L4)	ATL1130
⚠	7	VM Coil (L5)	ATL1133
⚠	8	VM Coil (L6)	ATL1133

2.8 CHASSIS BLOCK (1)

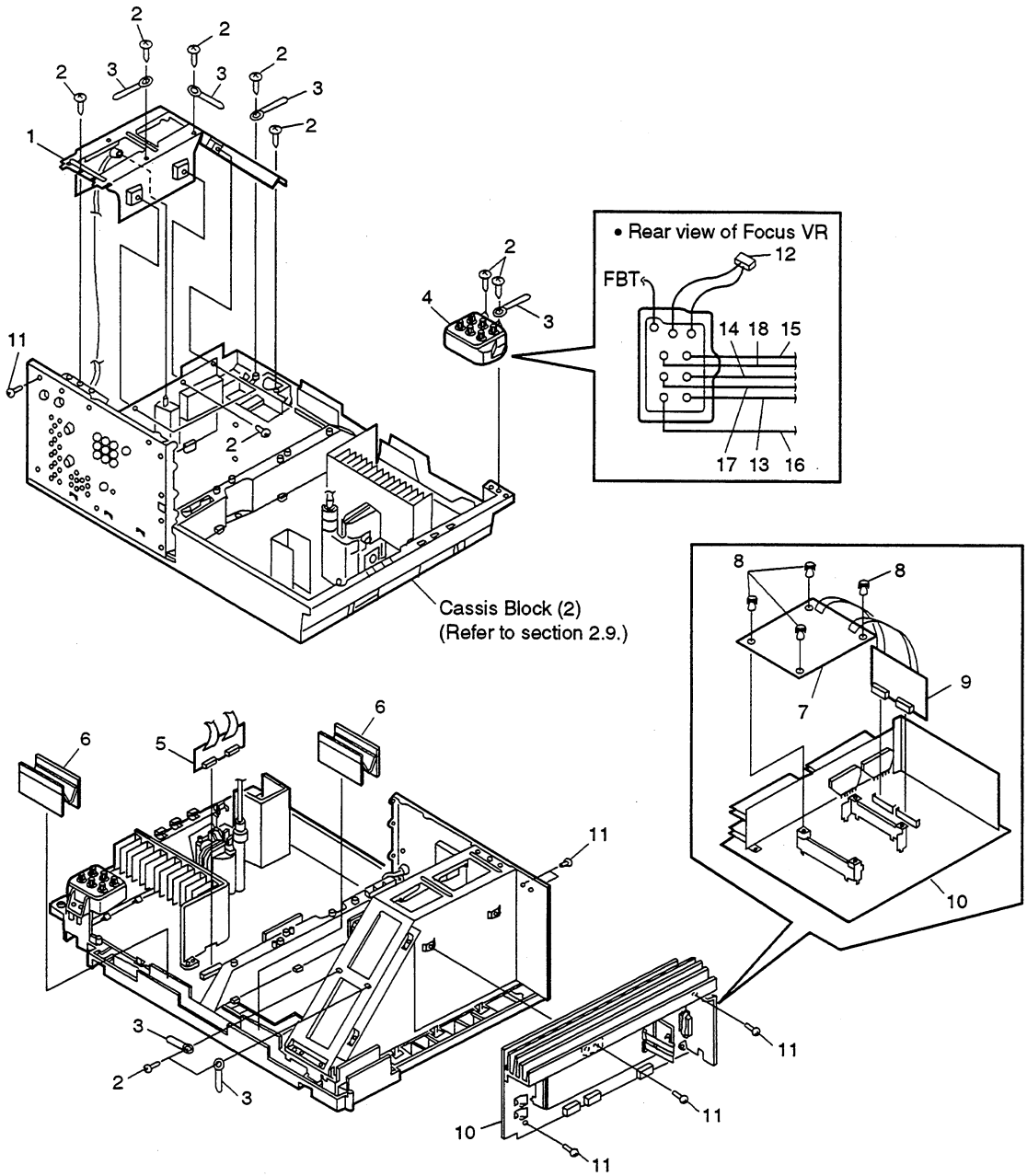

Parts List

Mark	No.	Description	Part No.
NSP	1	PCB Frame	ANG2141
	2	Screw	BBZ30P140FZK
	3	Binder	AEP-215
⚠	4	Focus VR (VR1)	ACX1096
	5	CONNECTOR A Assy	AWZ6189
	6	Wire Holder	AMR2832
	7	CONVER CONTROL Assy	AWZ6195
	8	Rivet	AEC-441
	9	CONNECTOR B Assy	AWZ6196
	10	AMP Assy	AWZ6204
	11	Screw	ABZ30P120FZK
	12	4P Housing Wire (J11)	ADX2230
	13	1P Lead Wire (J4)	ADX2289
	14	1P Lead Wire (J5)	ADX2290
	15	1P Lead Wire (J6)	ADX2291
	16	1P Lead Wire (J7)	ADX2231
	17	1P Lead Wire (J8)	ADX2232
	18	1P Lead Wire (J9)	ADX2233

2.9 CHASSIS BLOCK (2)

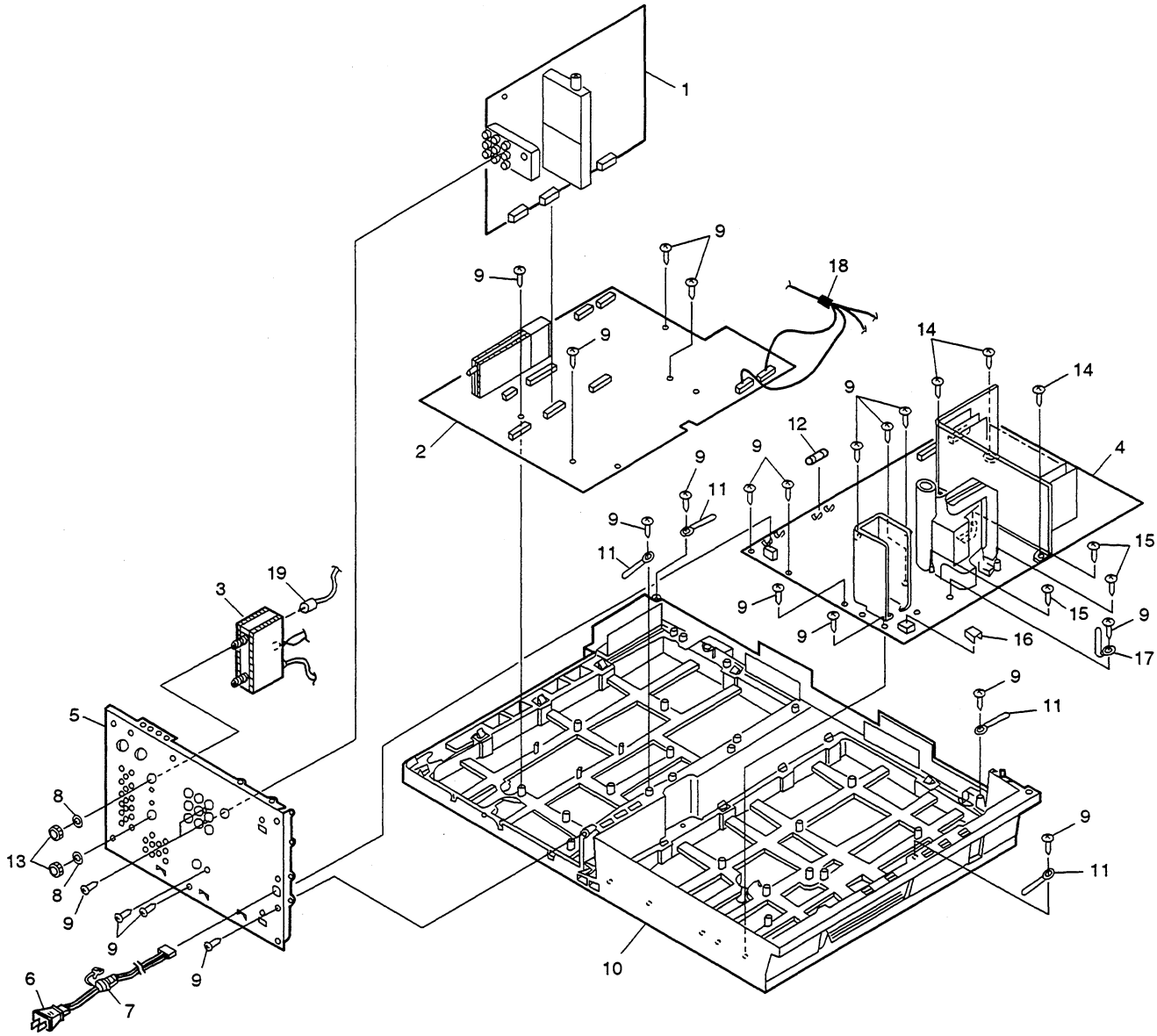

Parts List

Mark	No.	Description	Part No.
	1	AV I/O Assy	AWZ6197
	2	TUNER • VIDEO Assy	AWZ6185
	3	RF Switch	AXF1088
☆	4	POWER SUPPLY SERVICE Assy	AWV1615
	5	Rear Panel	ANC2296
⚠	6	AC Power Cord	BDG1019
	7	Strain Relief	AEP-113
	8	Bushing	AEC1661
	9	Screw	BBZ30P140FZK
NSP	10	Chassis	AMA1011
	11	Binder	AEP-215
⚠	12	Fuse (FU102, 0.5A/125V)	AEK1010
	13	Nut	ABN-087
	14	Screw	ABZ30P120FZK
	15	Screw	VBZ30P200FMC
	16	Shield Case	ANK1510
	17	Binder	AEC-826
	18	Wire Harness (J8009)	ADX2345
	19	Coaxial Cable	ADE1165

2.8 CHASSIS BLOCK (1)

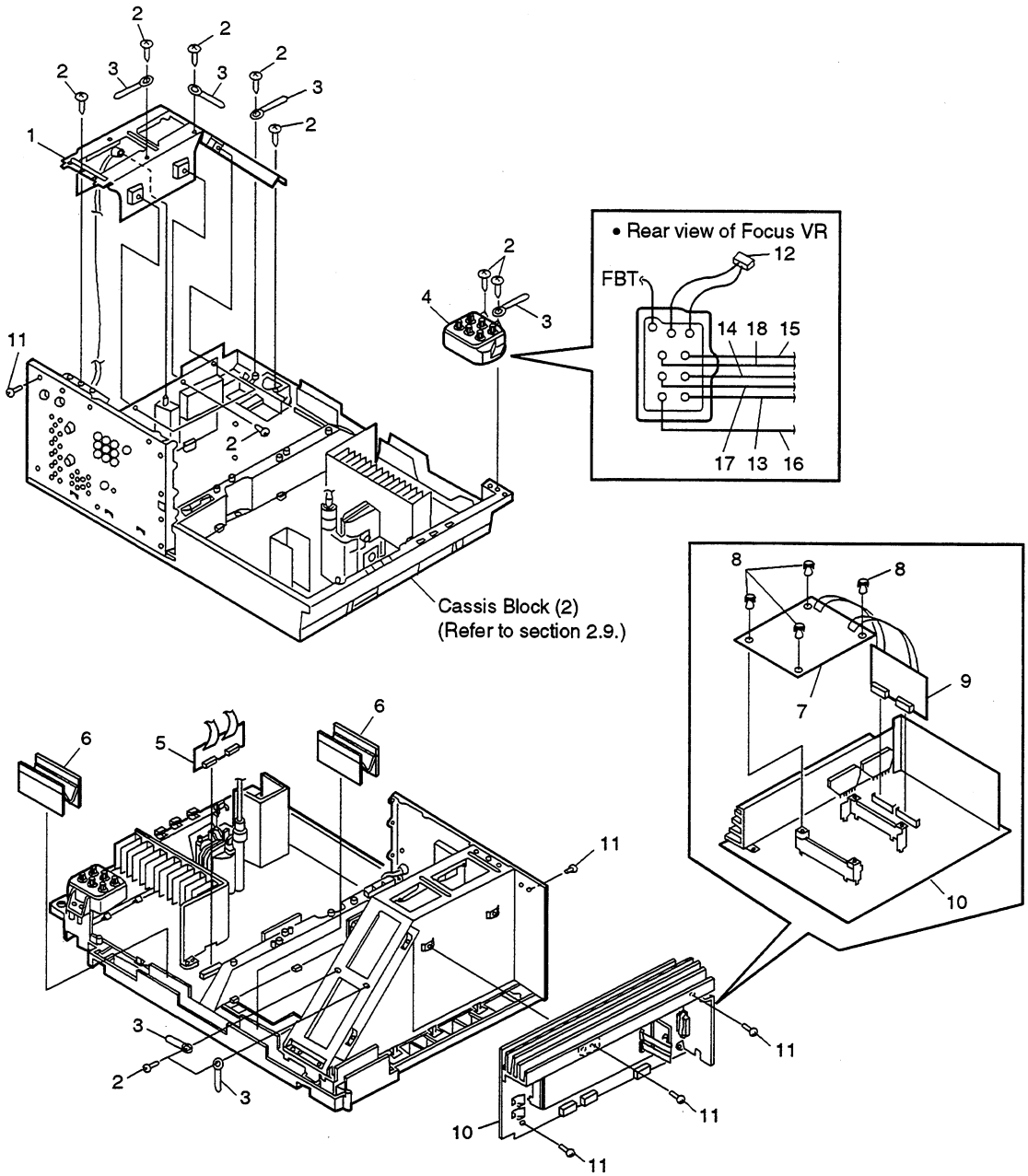

Parts List

Mark	No.	Description	Part No.
NSP	1	PCB Frame	ANG2141
	2	Screw	BBZ30P140FZK
	3	Binder	AEP-215
⚠	4	Focus VR (VR1)	ACX1096
	5	CONNECTOR A Assy	AWZ6189
	6	Wire Holder	AMR2832
	7	CONVER CONTROL Assy	AWZ6195
	8	Rivet	AEC-441
	9	CONNECTOR B Assy	AWZ6196
	10	AMP Assy	AWZ6190
	11	Screw	ABZ30P120FZK
	12	4P Housing Wire (J11)	ADX2230
	13	1P Lead Wire (J4)	ADX2289
	14	1P Lead Wire (J5)	ADX2290
	15	1P Lead Wire (J6)	ADX2291
	16	1P Lead Wire (J7)	ADX2231
	17	1P Lead Wire (J8)	ADX2232
	18	1P Lead Wire (J9)	ADX2233

2.9 CHASSIS BLOCK (2)

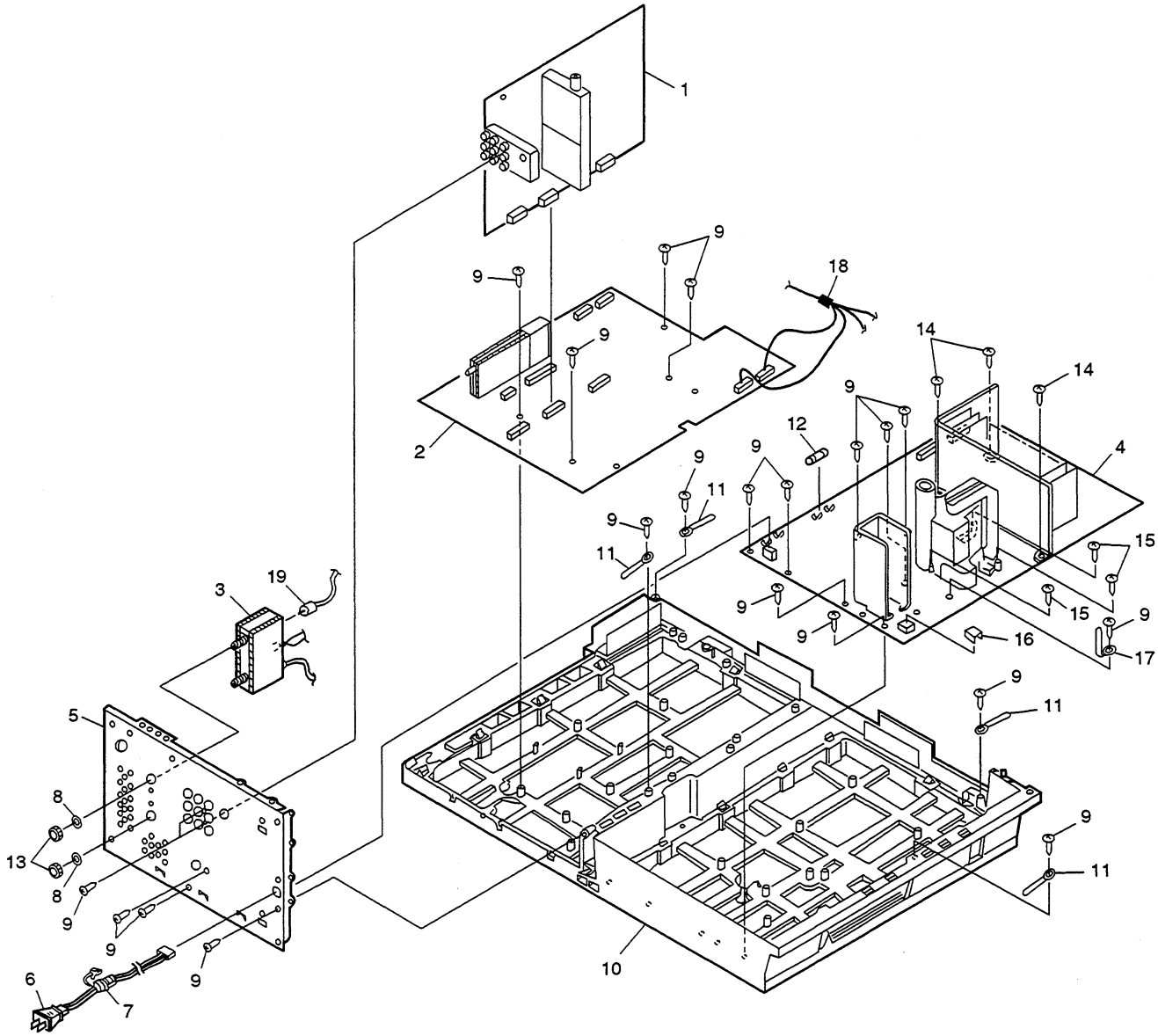

Parts List

Mark	No.	Description	Part No.
	1	AV I/O Assy	AWZ6197
	2	TUNER • VIDEO Assy	AWZ6185
	3	RF Switch	AXF1088
☆	4	POWER SUPPLY SERVICE Assy	AWV1615
	5	Rear Panel	ANC2296
⚠	6	AC Power Cord	BDG1019
	7	Strain Relief	AEP-113
	8	Bushing	AEC1661
	9	Screw	BBZ30P140FZK
NSP	10	Chassis	AMA1011
	11	Binder	AEP-215
⚠	12	Fuse (FU102, 0.5A/125V)	AEK1010
	13	Nut	ABN-087
	14	Screw	ABZ30P120FZK
	15	Screw	VBZ30P200FMC
	16	Shield Case	ANK1510
	17	Binder	AEC-826
	18	Wire Harness (J8009)	ADX2288
	19	Coaxial Cable	ADE1165

3. SCHEMATIC DIAGRAM

3.1 OVERALL WIRING DIAGRAM

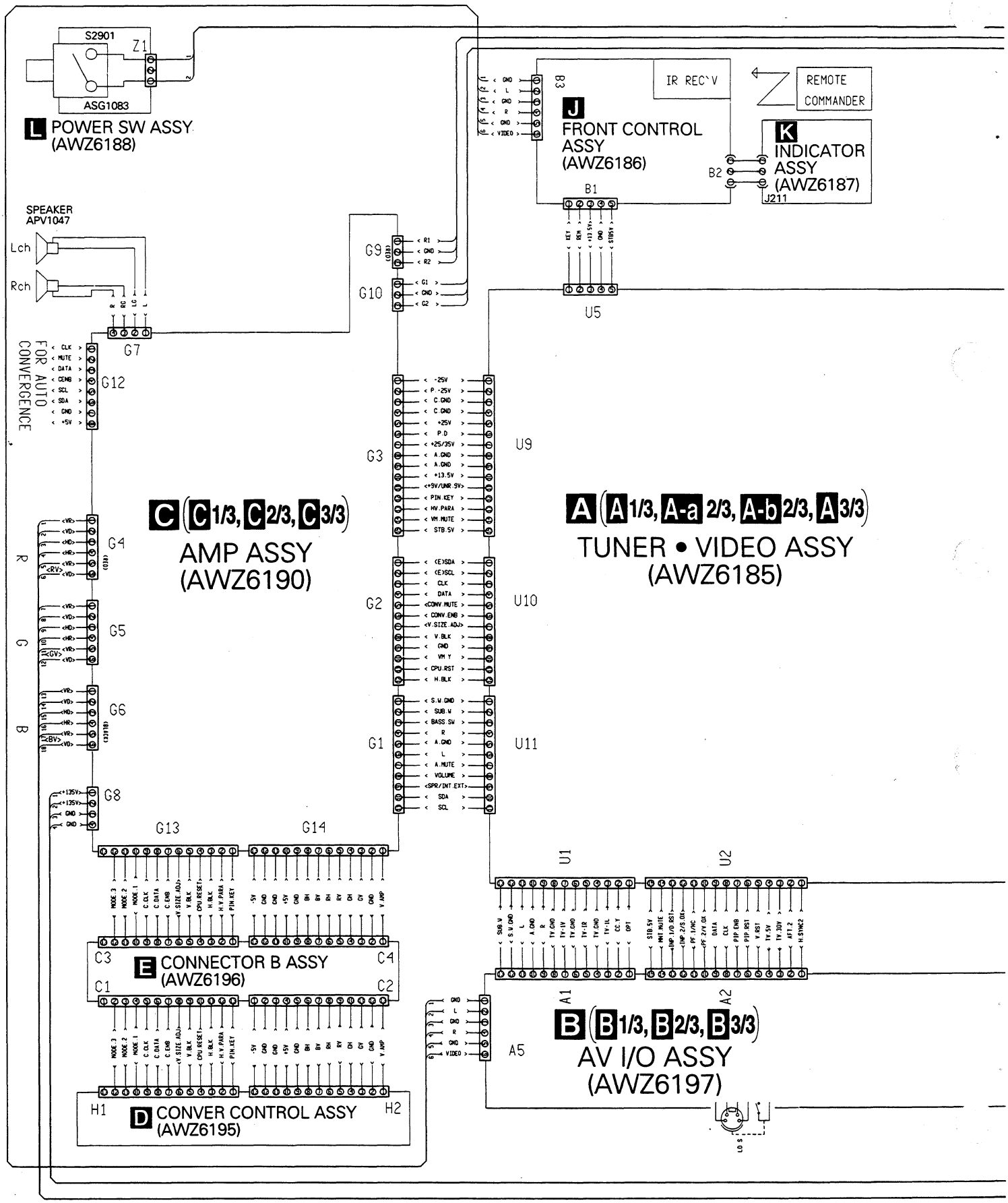

Note : When ordering service parts, be sure to refer to
"EXPLODED VIEWS AND PARTS LIST" or "PCB PARTS LIST"

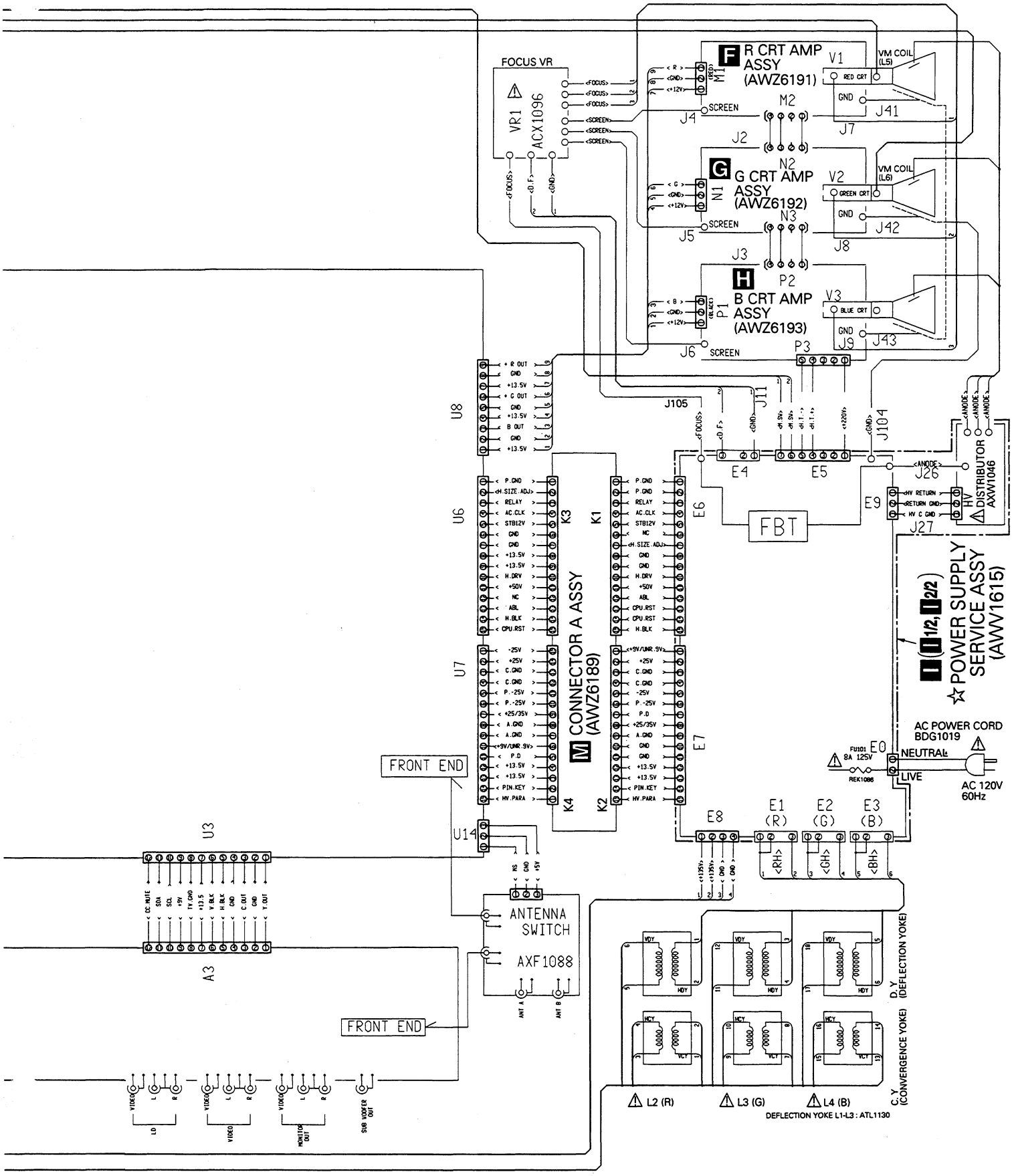

3.2 TUNER•VIDEO ASSY (1/3)

A TUNER • VIDEO ASSY (1/3) (AWZ6185)

• TUNER BLOCK

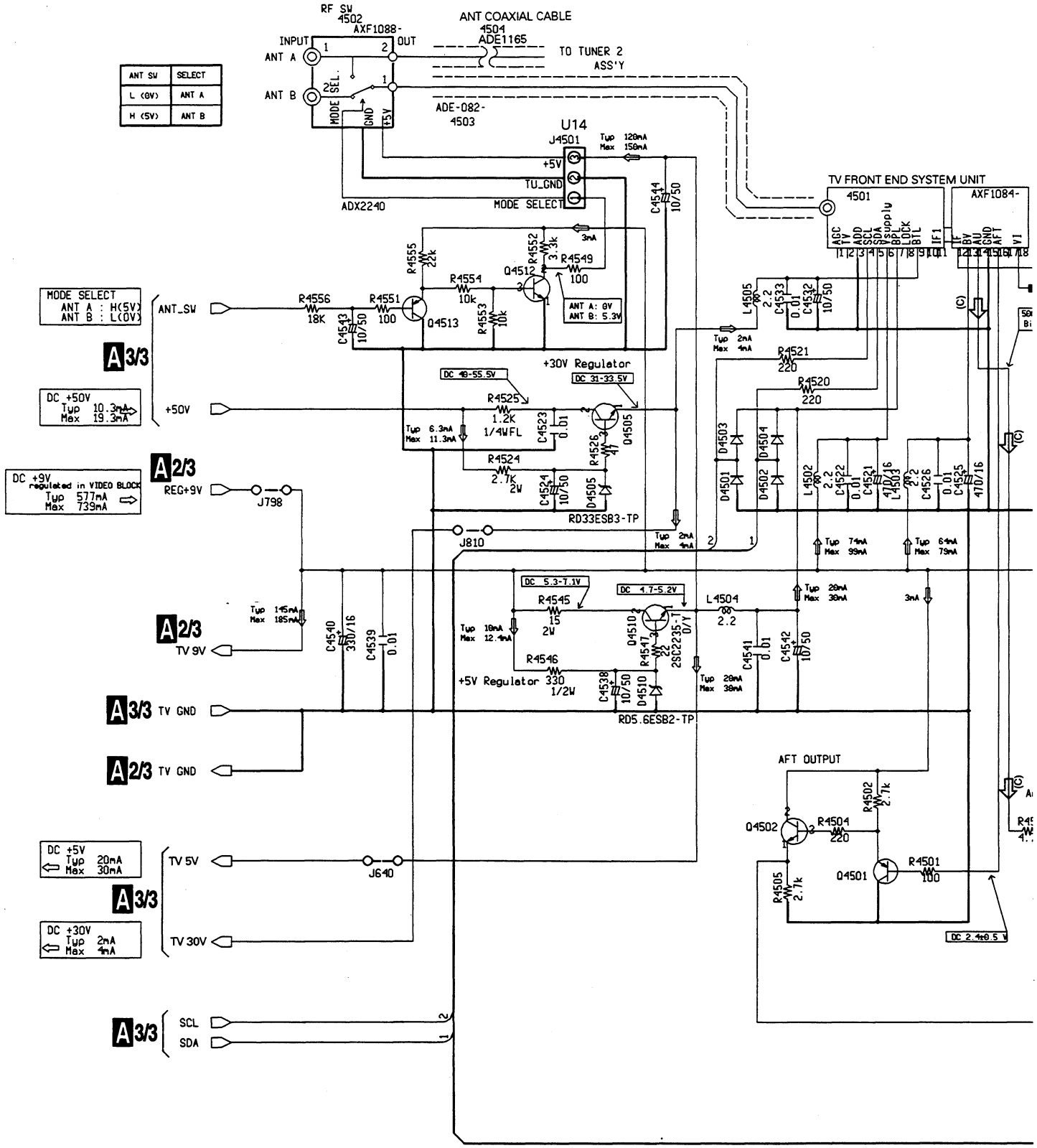

Notes
1.RESISTORS
Indicated in Ω
tolerance unless otherwise noted k Ω
2.CAPASITORS
Indicated in capacity(uF)/Voltage unless otherwise noted p pF
Indication without voltage is 50V except electrolytic capacitor.

2SA933S-T R/S
2SC1740S-T R/S
HSS104-02-TP

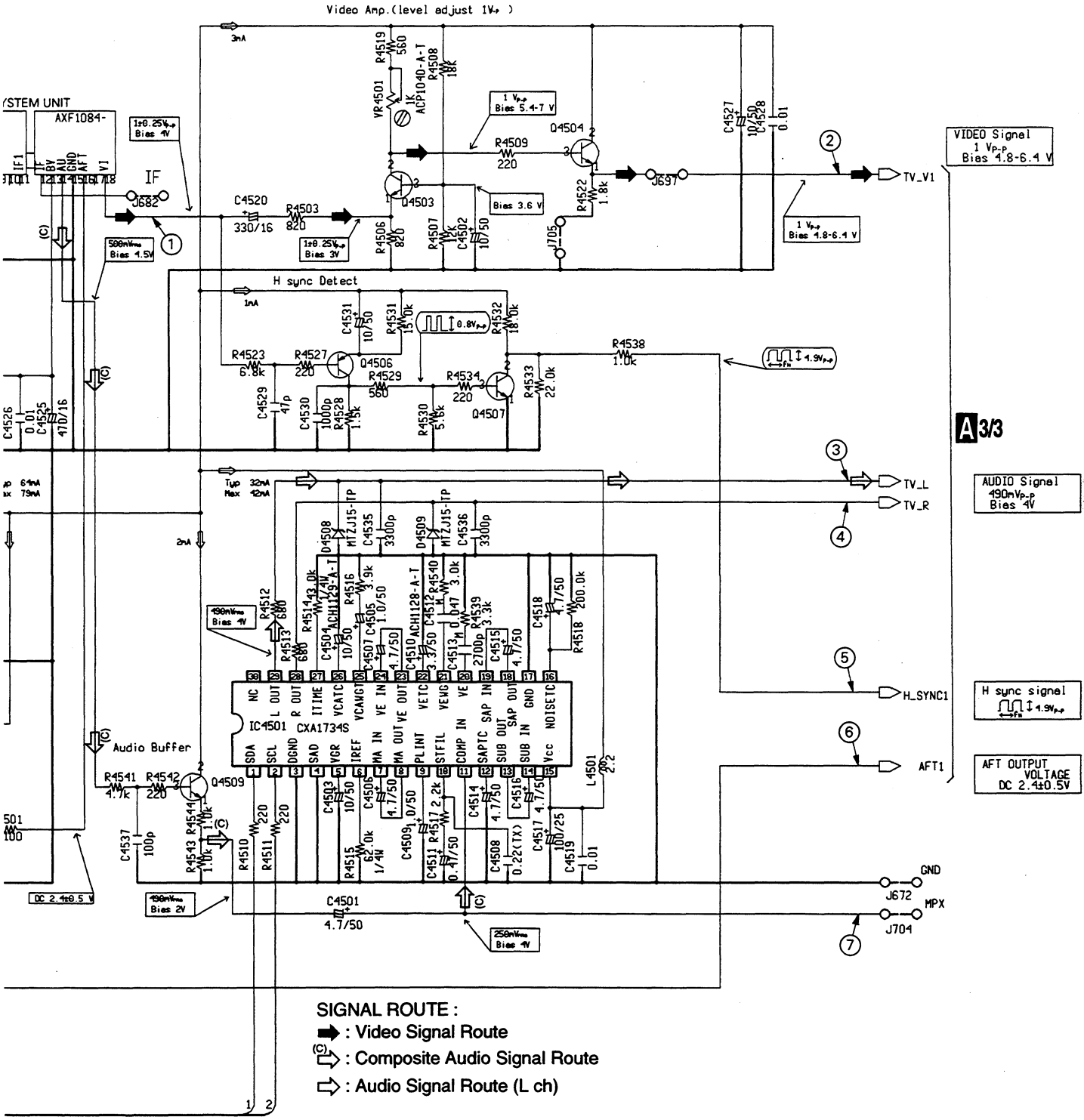

3.3 TUNER•VIDEO ASSY (2/3)

A TUNER • VIDEO ASSY (2/3) (AWZ6185)
• VIDEO BLOCK

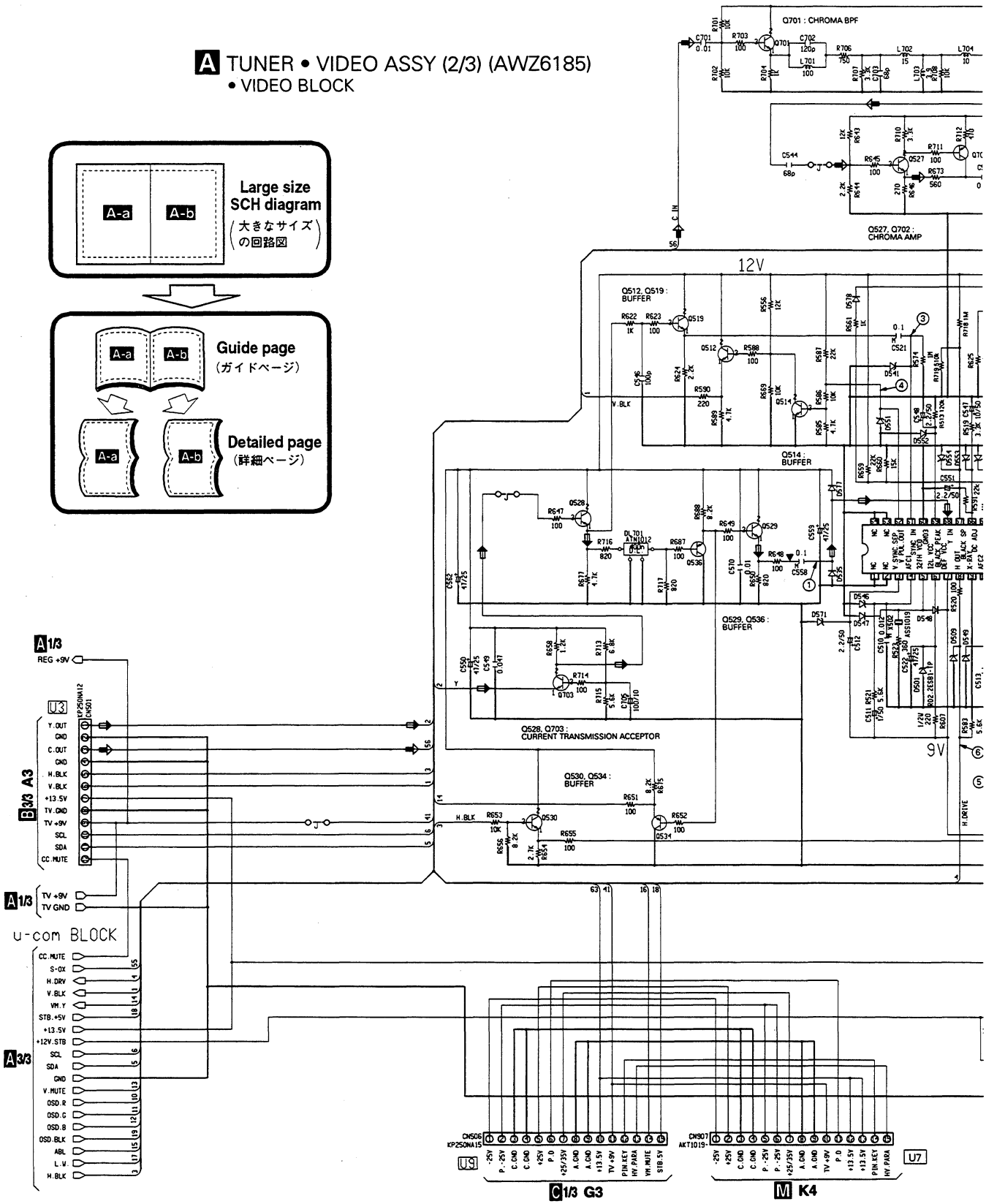

A-b

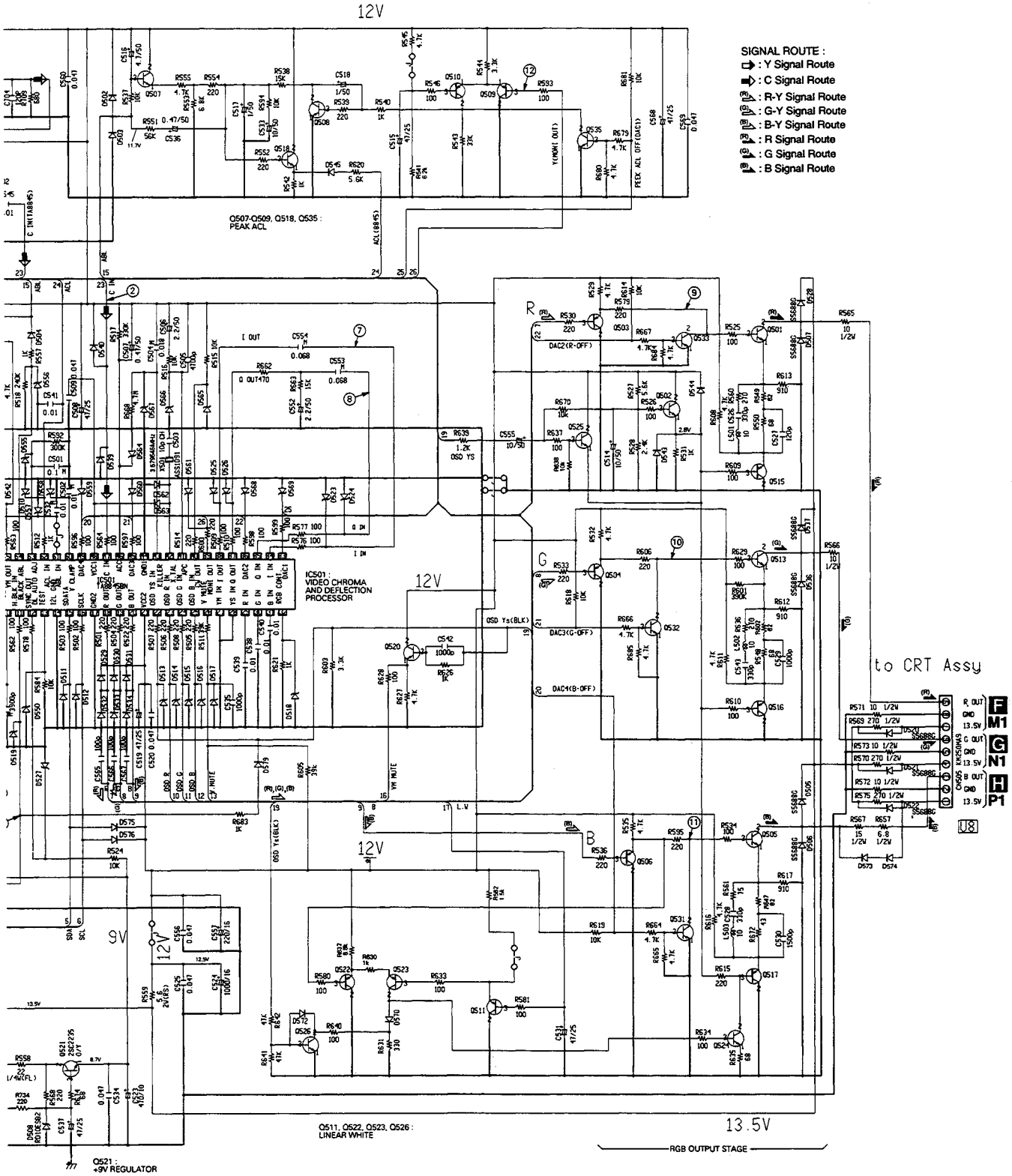

NOTE :

1.RESISTERS indicated in 1/2W.1/4W.1WFL.2WFL 5%
tolerance unless otherwise noted K:KΩ, M:MΩ
(F)±1% , (G)±2% , (K)±10% , (M)±20% tolerance

2.CAPACITORS indicated in capacity (F)/(V) unless otherwise noted pF
indicated without voltage is 50V except electrolytic capacitor

HSS104-02

MTZJ15

2SA933S

2SC1740S

A-a A-b

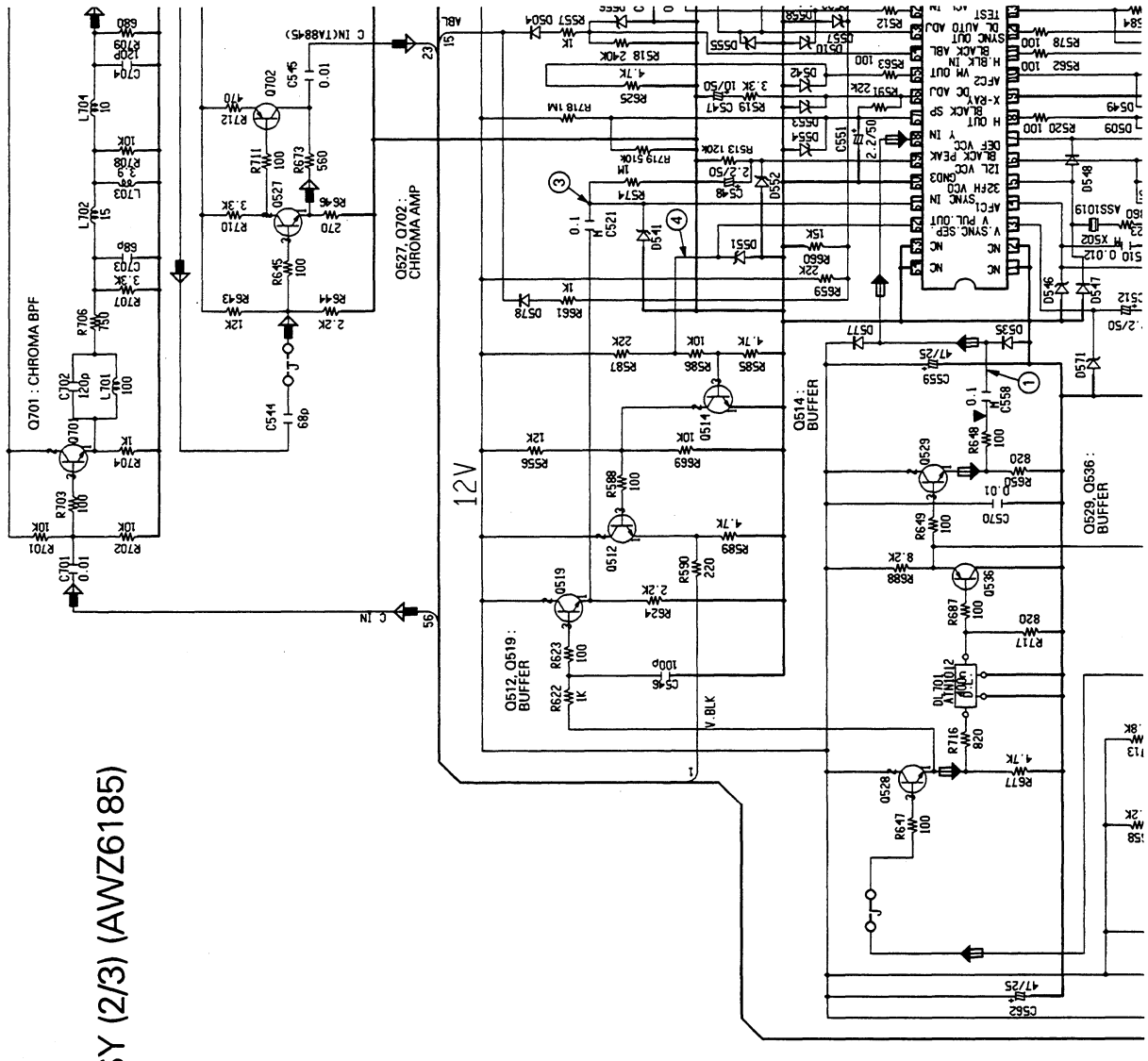

A TUNER • VIDEO ASSY (2/3) (AWZ6185)
• VIDEO BLOCK

A1/3

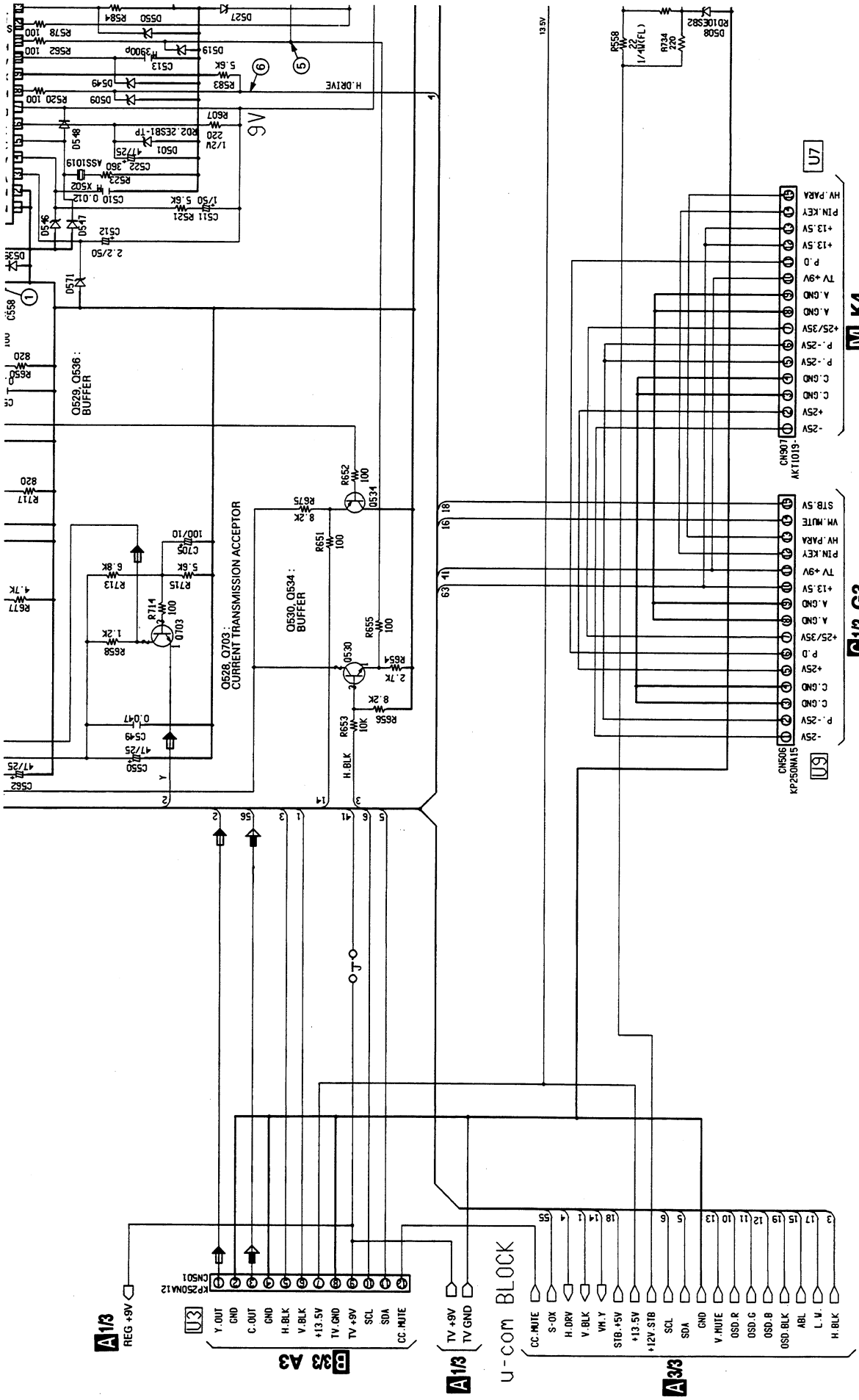
Q528, Q703 : CURRENT TRANSMISSION ACCEPTOR
Q529, Q536 : BUFFER
Q530, Q534 : BUFFER
U-COM BLOCK
CN501 KP250NA12
CN506 KP250NA15
CN907 AKT1019
U3
U7
U9
K4
G3
A3
A1/3
B3/3
A3/3
Y.OUT
GND
C.OUT
H.BLK
V.BLK
+13.5V
TV.GND
TV +9V
SCL
SDA
CC.MUTE
REG +9V
TV +9V
TV GND
S-OX
H.DRV
V.BLK
VM.Y
STB.+5V
+12V.STB
V.MUTE
OSD.R
OSD.G
OSD.B
OSD.BLK
ABL
L.W.
STB.5V
VM.MUTE
HV.PARA
PIN.KEY
P.D
+25/35V
A.GND
C.GND
+25V
P.-25V
-25V

A-a A-b

A-a 2/3

A-a A-b

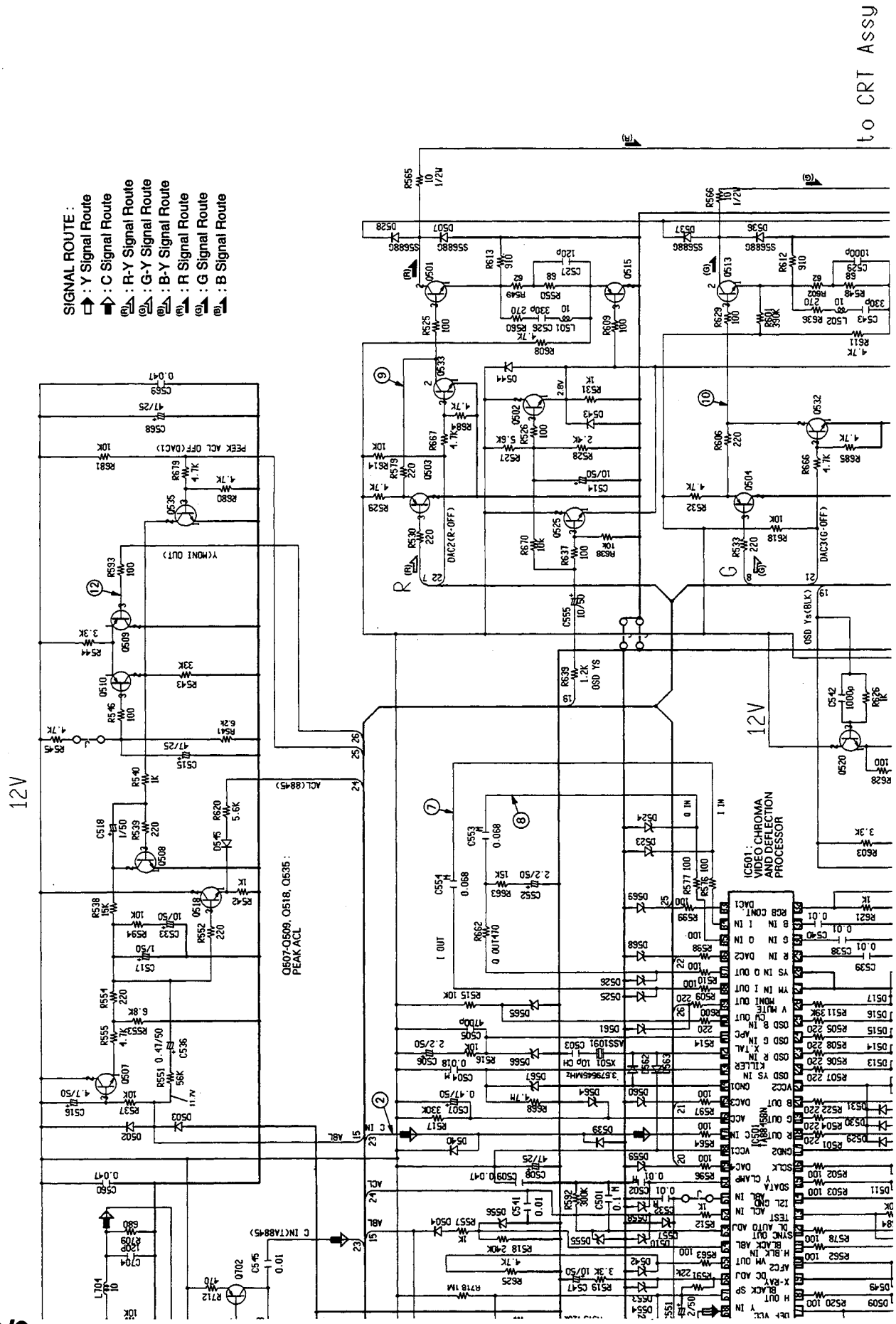
SIGNAL ROUTE :
: Y Signal Route
: C Signal Route
: R-Y Signal Route
: G-Y Signal Route
: B-Y Signal Route
: R Signal Route
: G Signal Route
: B Signal Route
to CRT Assy
12V
12V
IC501 : VIDEO CHROMA AND DEFLECTION PROCESSOR
Q507-Q509, Q518, Q535 : PEAK ACL
PEAK ACL OFF(DAC1)
Y(MONI OUT)
ACL(8845)
C IN(TA8845)
DAC2(R-OFF)
DAC3(G-OFF)
OSD Ys(BLK)
OSD YS
R
G

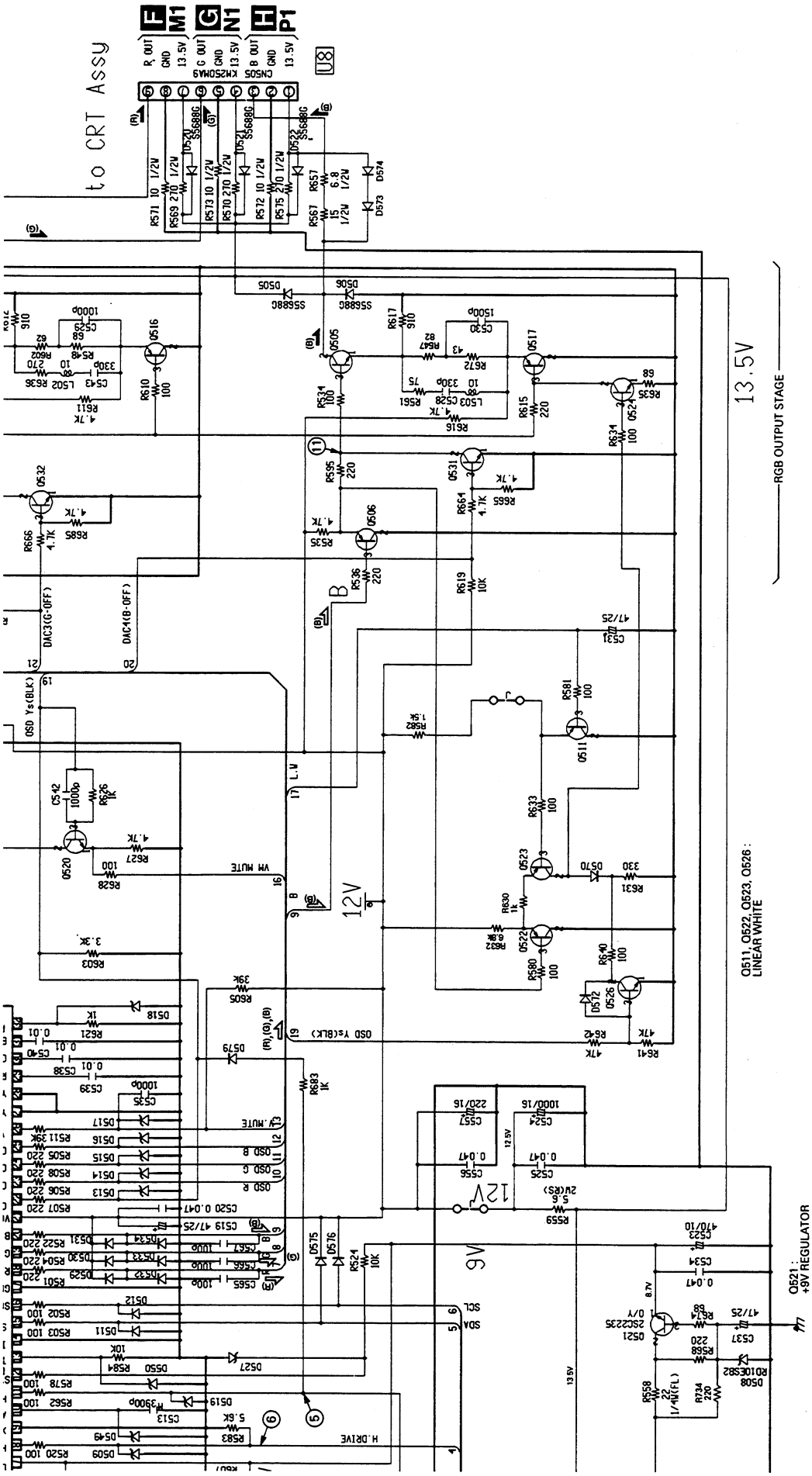

NOTE :

2SA933S

2SC1740S

HSS104-02

MTZJ15

1.RESISTERS indicated in 1/2W,1/4W,1WFL,2WFL 5%
tolerance unless otherwise noted K:kΩ, M:MΩ
(F)±1%, (G)±2%, (K)±10%, (M)±20% tolerance

2.CAPACITORS indicated in capacity (F)/(V) unless otherwise noted pF
indicated without voltage is 50V except electrolytic capacitor

A-a A-b

3.4 TUNER•VIDEO ASSY (3/3)

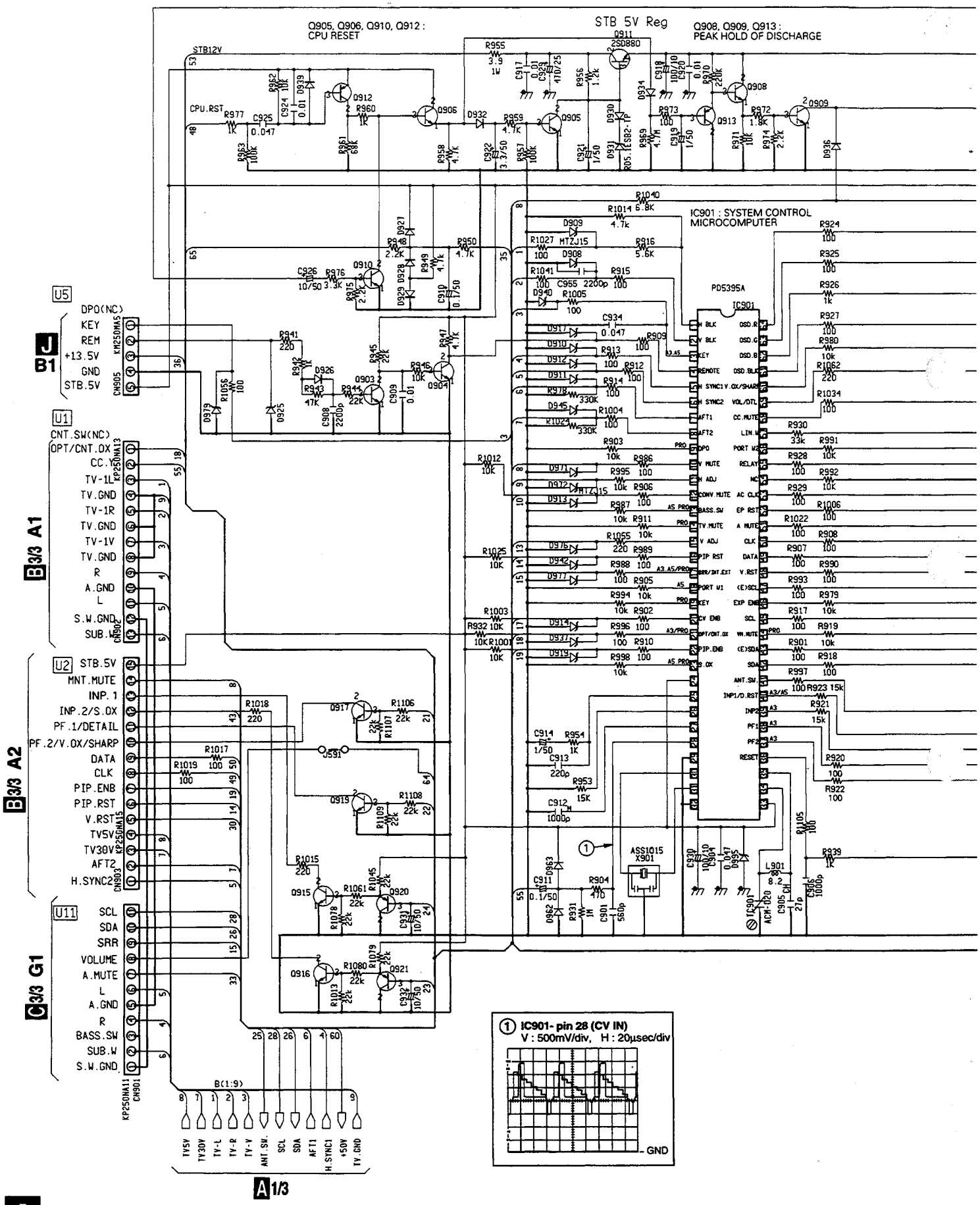

A TUNER • VIDEO ASSY (3/3) (AWZ6185)
• UCOM BLOCK

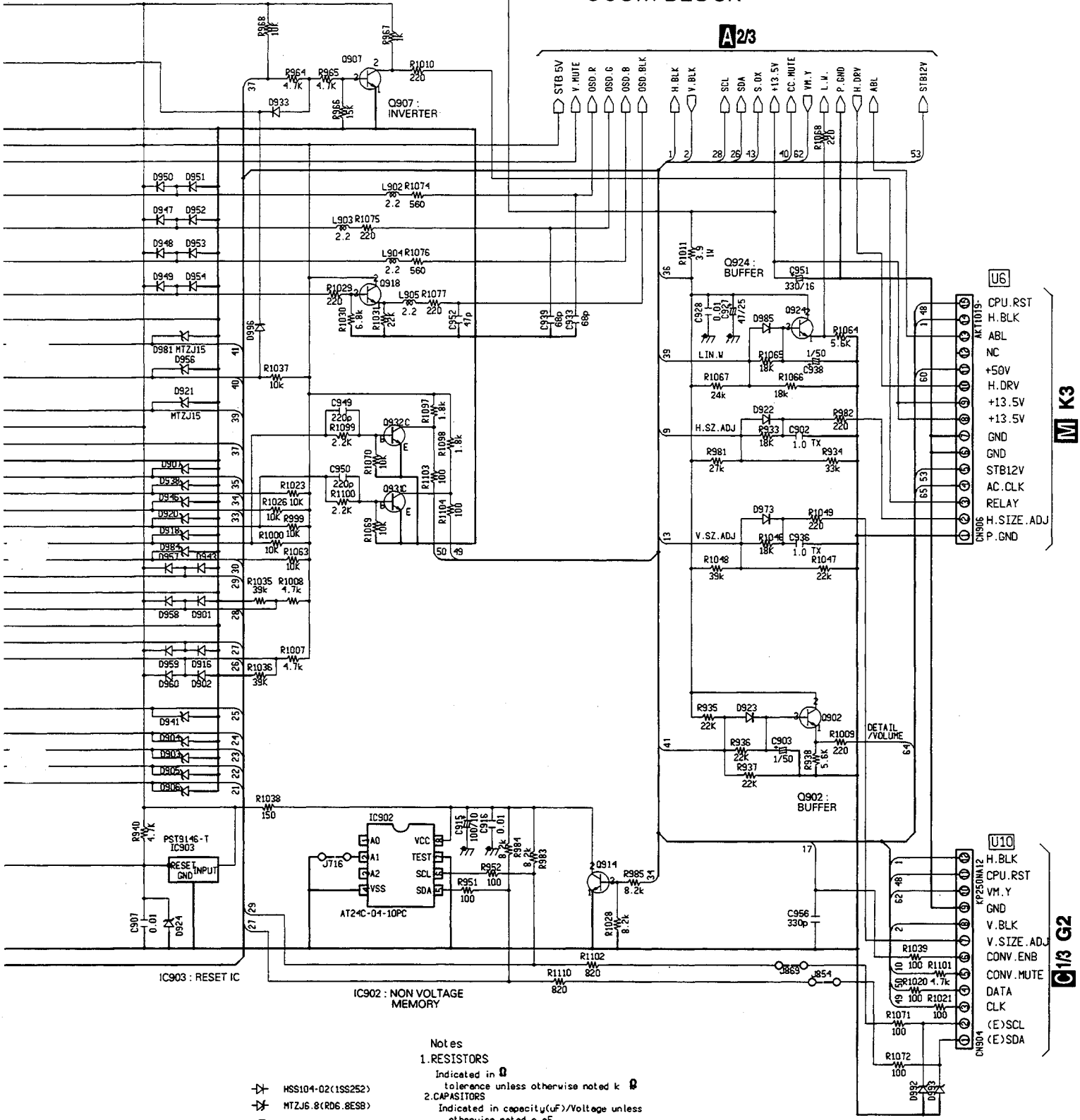

Notes
1.RESISTORS
Indicated in Ω
tolerance unless otherwise noted k Ω
2.CAPASITORS
Indicated in capacity(uF)/Voltage unless otherwise noted p pF
Indication without voltage is 50V except electrolytic capacitor.

3.5 AV I/O ASSY (1/3)

B AV I/O ASSY (1/3) (AWZ6197)

• TUNER 2 BLOCK

1.RESISTERS indicated in 1/2W,1/4W,1/10W,1WFL,2WFL 5%
tolerance unless otherwise noted K;Ω , M;Ω
(F)+1% , (G)+2% , (K)+10% , (M)+20% tolerance

2.CAPACITORS indicated in capacity (uF)/(V) unless otherwise noted pF
indicated without voltage is 50V except electrolytic capacitor

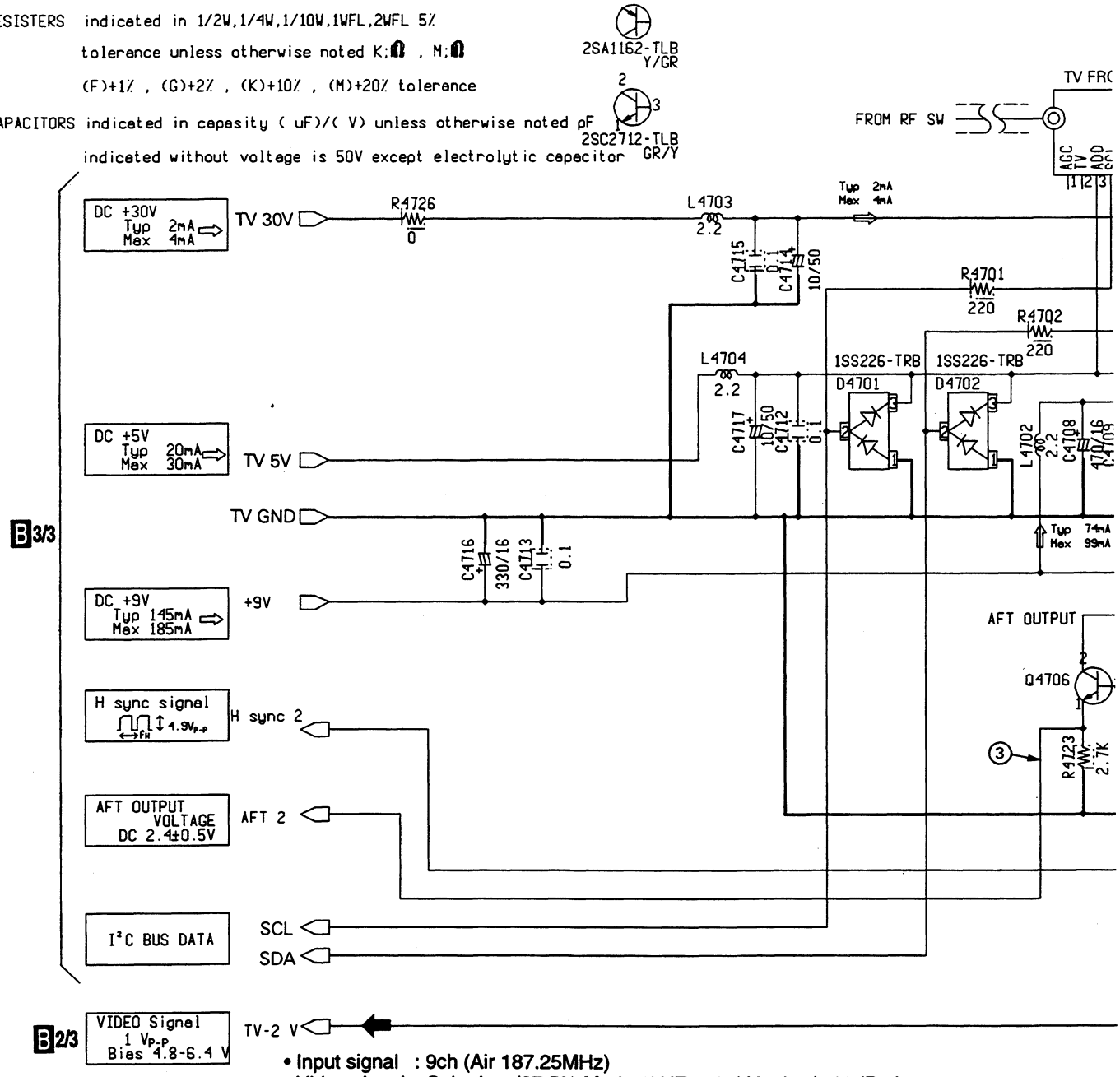

- Input signal : 9ch (Air 187.25MHz)
- Video signal : Color bar (87.5% Mod., 1kHZ ±25kHz dev.), 60dBμ input
- Range : DC range (Unless otherwise noted)

① **TV FRONT END pin 18 (VI)**
V : 1V/div, H : 20μsec/div

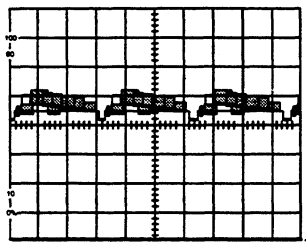

② **Foot of R4716 (H SYNC 2)**
V : 1V/div, H : 20μsec/div

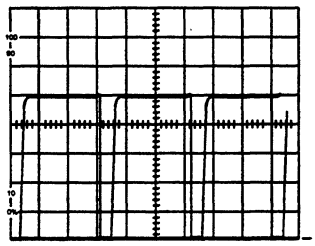

SIGNAL ROUTE :
➡ : Video Signal Route

Voltage of TV FRONT END (AXF1084)

Pin	1	2	3	4	5	6	7	8	9
Voltage (V)	5.6	5.5	5.0	–	–	9.0	5.0	NC	33.0
Pin	10	11	12	13	14	15	16	17	18
Voltage (V)	NC	0	0	9.0	4.4	GND	2.3	NC	4.7

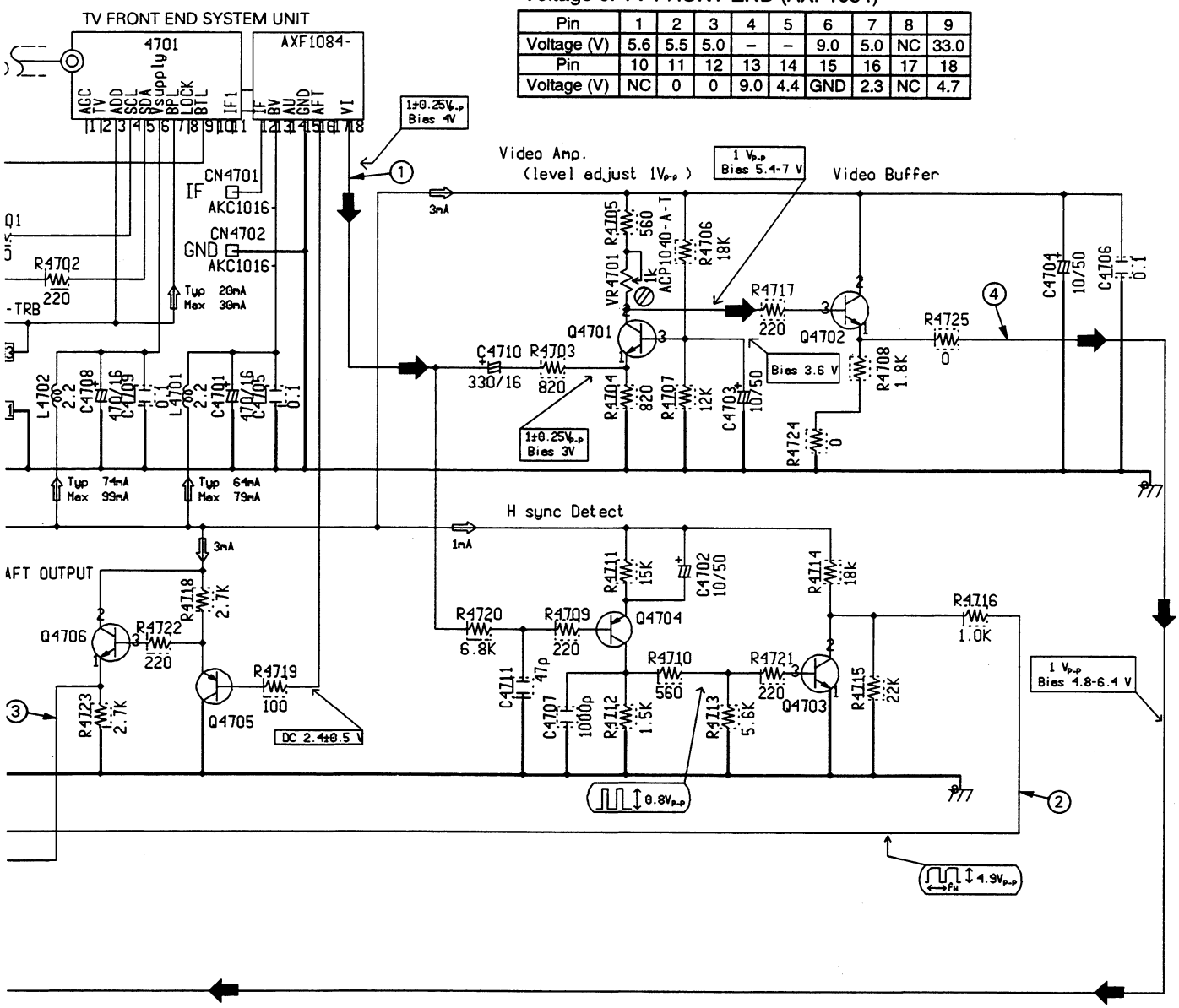

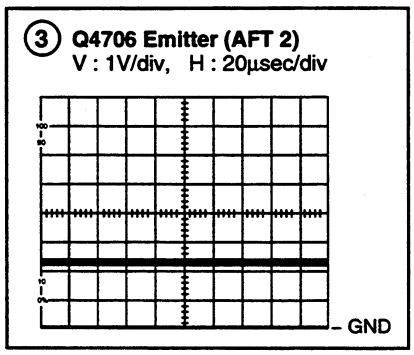

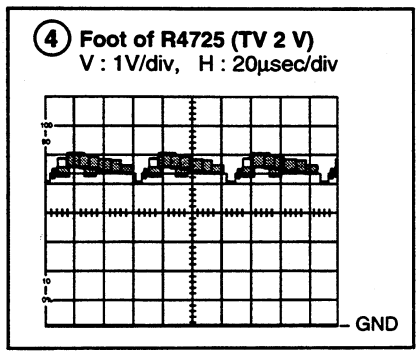

3.6 AV I/O ASSY (2/3)

B AV I/O ASSY (2/3) (AWZ6197)

• AV I/O, Y/C SEP, S INPUT AND SUB WOOFER BLOCKS

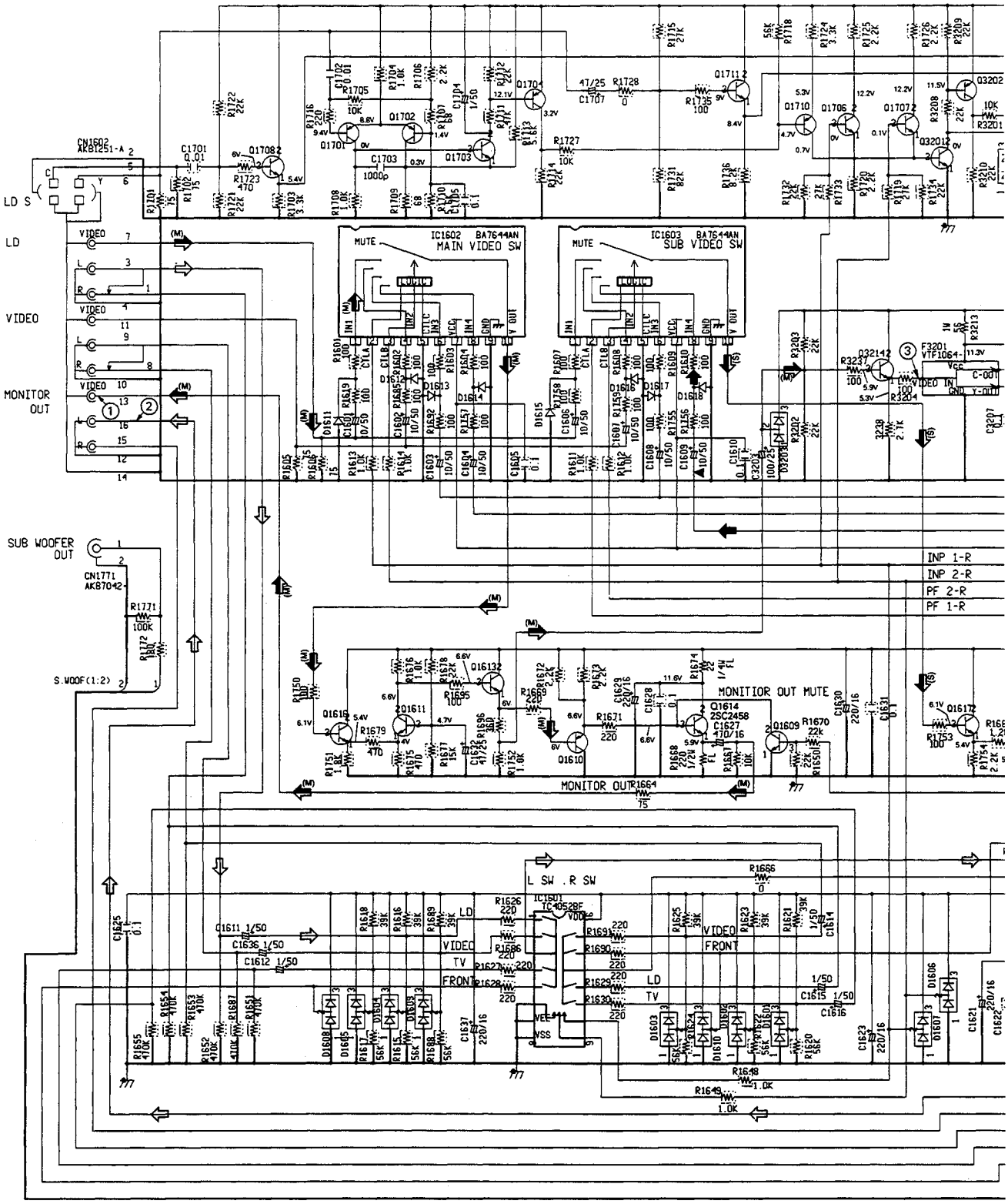

NOTE

1.RESISTORS Indicated in 1/2W,1/4W,1/10W,1WFL,2WFl ±5% tolerance unless otherwise notted k:k ,M:M
2.CAPACITORS Indicated in capacity (F)/(V) unless otherwise noted pF.
Indicated without voltage is 50V except electrolytic capacitor.

2SC2712-TLB 2SA1162-TLB 1SS226-TRB 1SS352-TRB

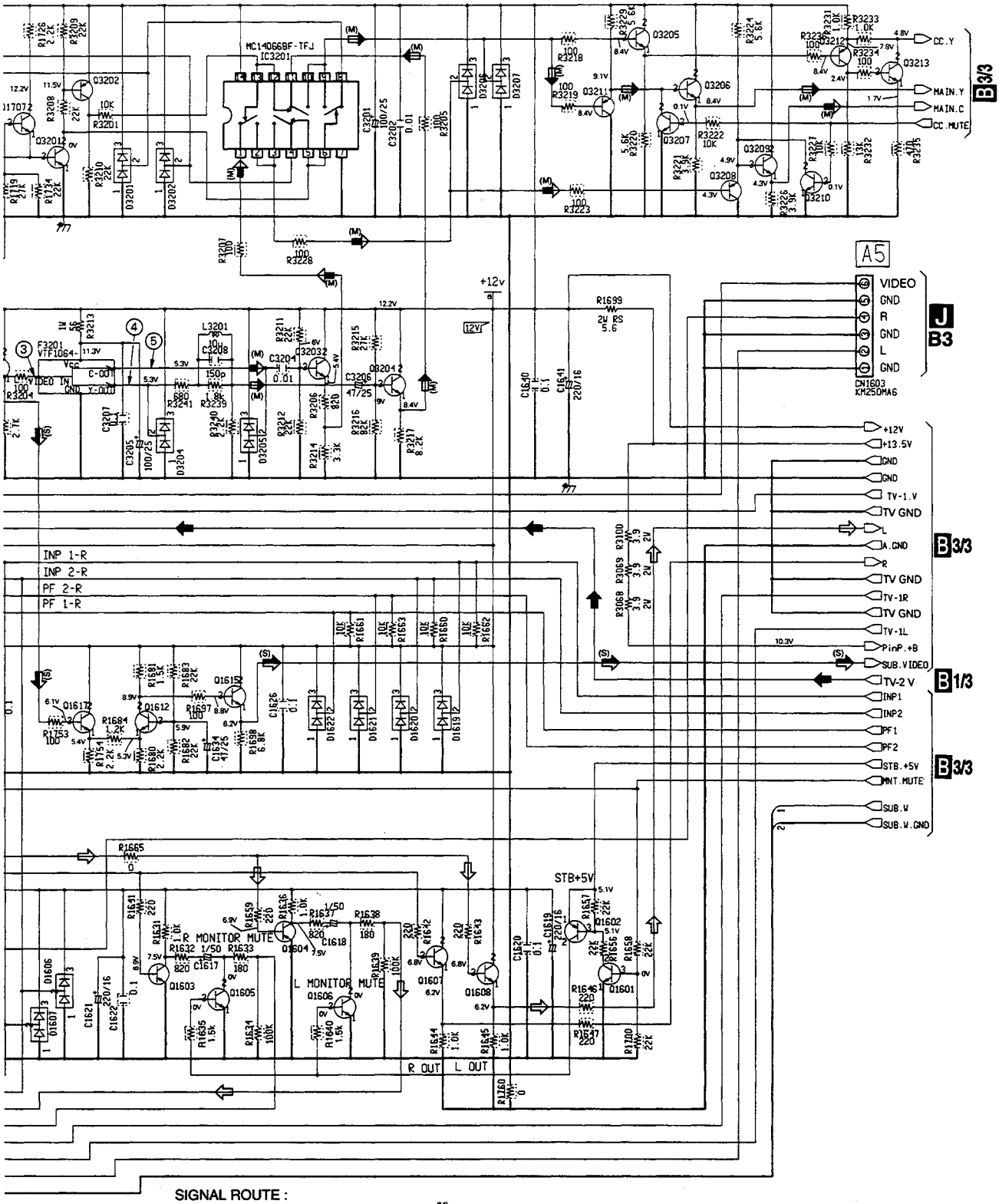

SIGNAL ROUTE :

- : Video Signal Route
- (M): Video Signal Route (Main picture)
- (S): Video Signal Route (Sub picture)
- (M): Y Signal Route (Main picture)
- (M): C Signal Route (Main picture)
- : Audio Signal Route (L ch)

3.7 AV I/O ASSY (3/3)

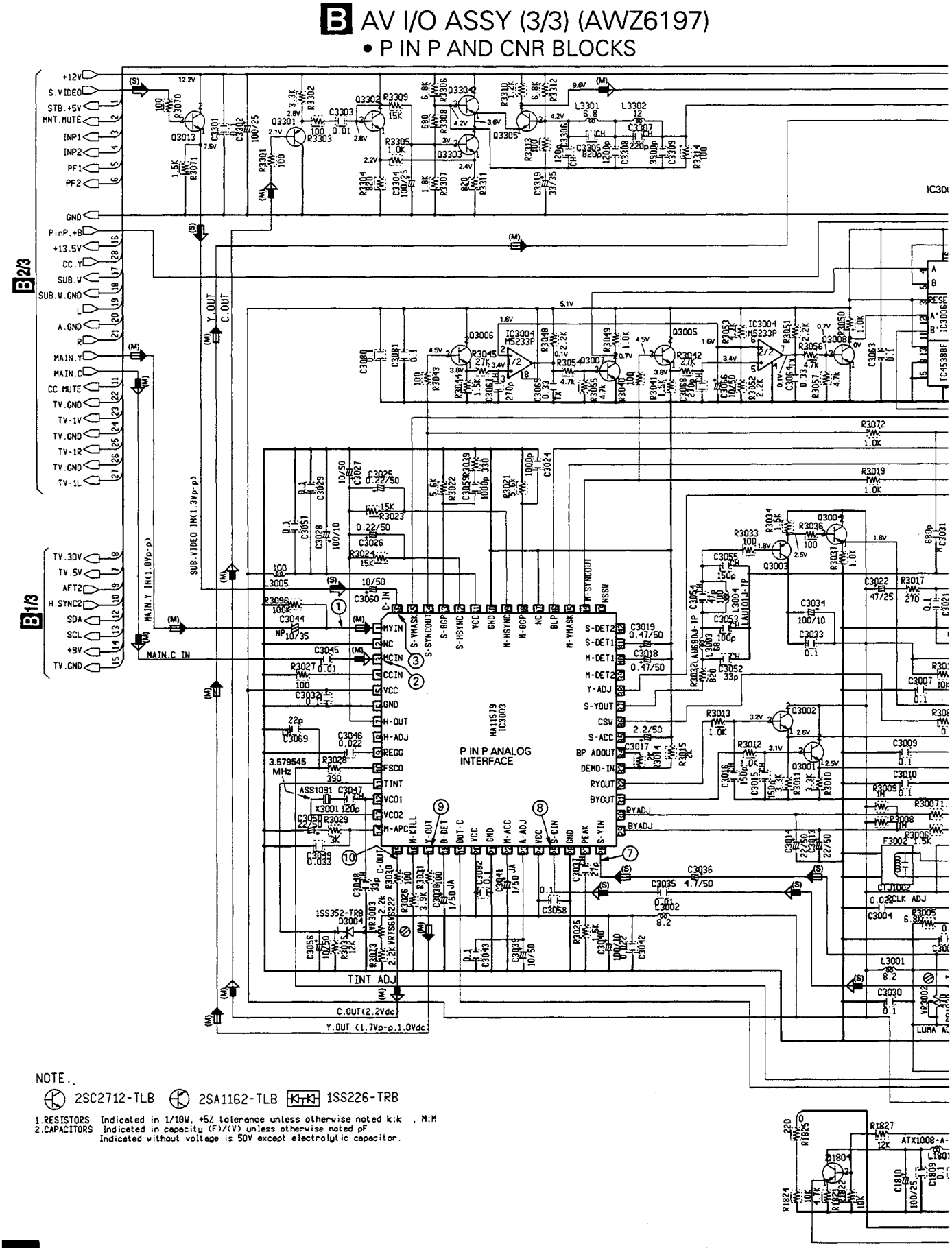

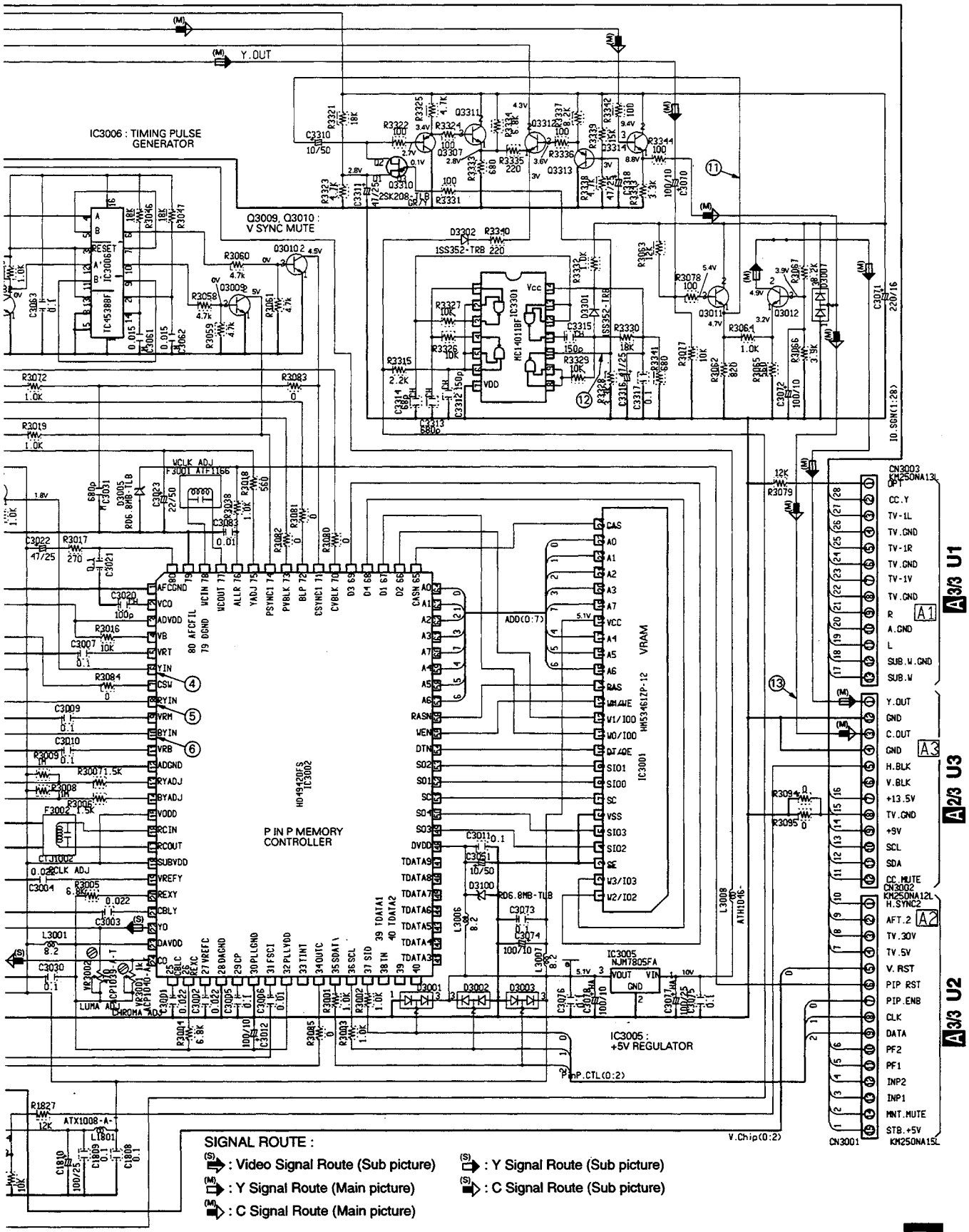
IC3006 : TIMING PULSE GENERATOR
Q3009, Q3010 : V SYNC MUTE
P IN P MEMORY CONTROLLER
IC3001
VRAM
IC3005 : +5V REGULATOR
CN3003
CN3002
CN3001
A3/3 U1
A2/3 U3
A3/3 U2
SIGNAL ROUTE :
: Video Signal Route (Sub picture)
: Y Signal Route (Main picture)
: C Signal Route (Main picture)
: Y Signal Route (Sub picture)
: C Signal Route (Sub picture)

3.8 AMP ASSY (1/3)

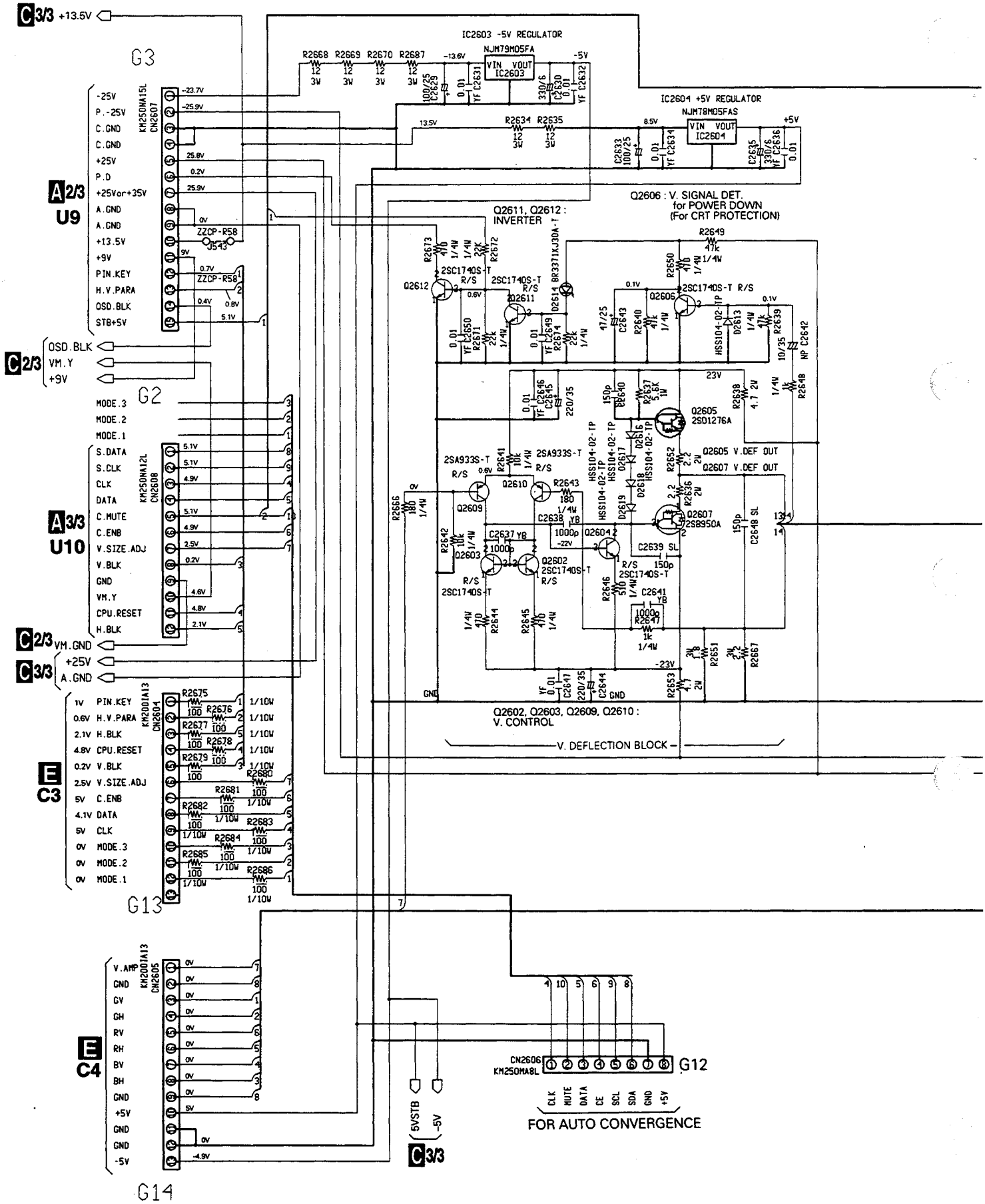

C AMP ASSY (1/3) (AWZ6190)

• CONVER AMP AND V. DEFLECTION BLOCKS

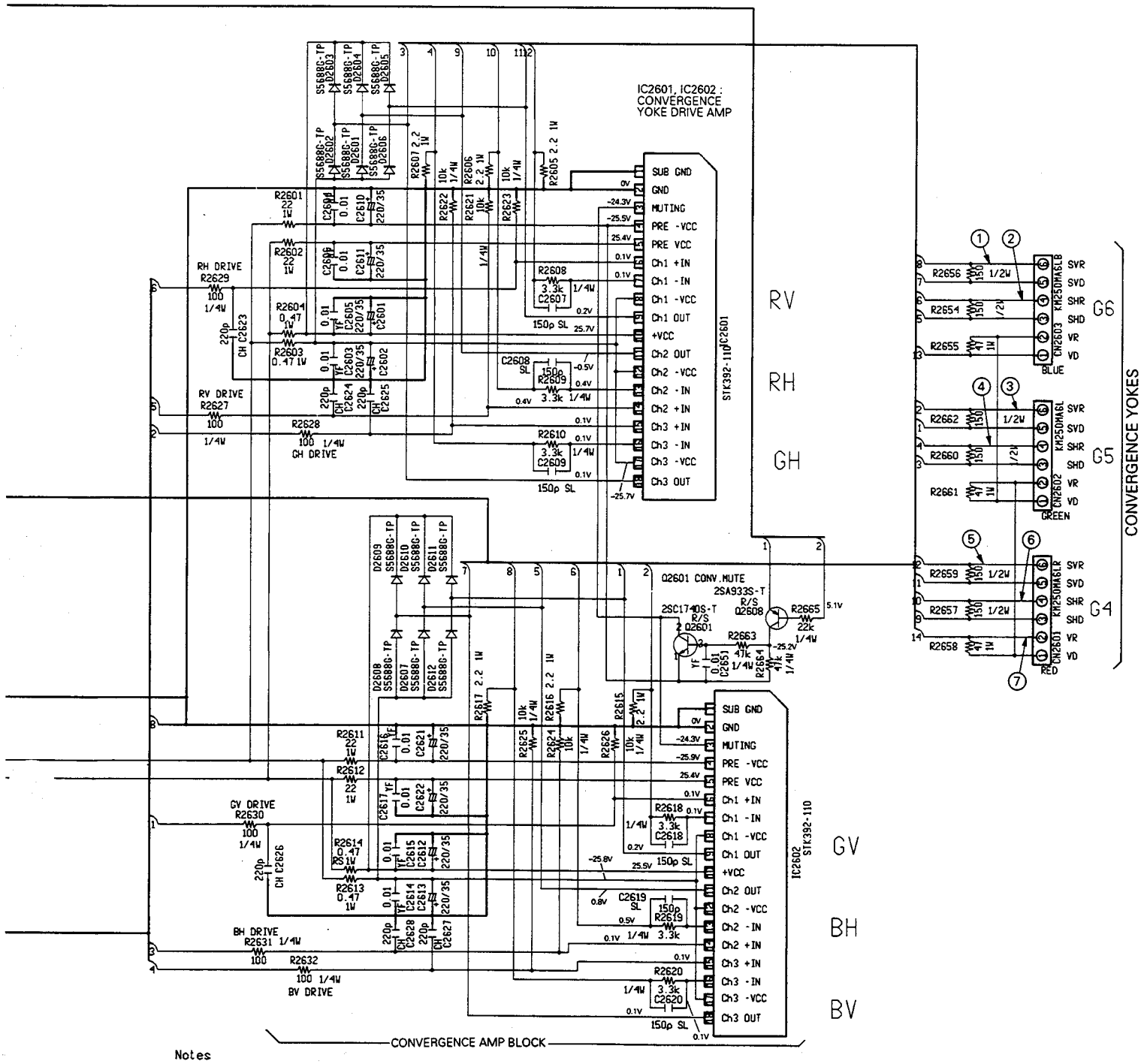

Notes

1. RESISTERS
   (RS):METAL OXIDE FILM RESISTER
   (RT):CEMENT RESISTER
   (RN):METAL FILM RESISTER
   (FL):NON FLAMMABLE RESISTER
   THE OTHERS:CARBONFILM RESISTER (1/4 W)
   Figures in pharentheses show the rated wattage.
   Those unspecified ones are of 1/4W.
   K:KΩ ,M:MΩ,Unspecified ones are of Ω

2. CAPACITORS
   (HA):Aluminium electrolytic capasitors
   p:pF,Unspecified ones are of uF
   Capacity/Voltage
   Unspecified ones are of 50V

3.9 AMP ASSY (2/3)

Notes
1.RESISTORS
Indicated in ohm,1/4W, ±5%
tolerance unless otherwise noted k;k ohm,M;M ohm
2.CAPASITORS
Indicated in capacity(uF)/Voltage unless
otherwise noted,p;pF.
Indication without voltage is 50V except electrolytic capacitor

C AMP ASSY (2/3) (AWZ6190)
• VELOCITY MODULATION BLOCK

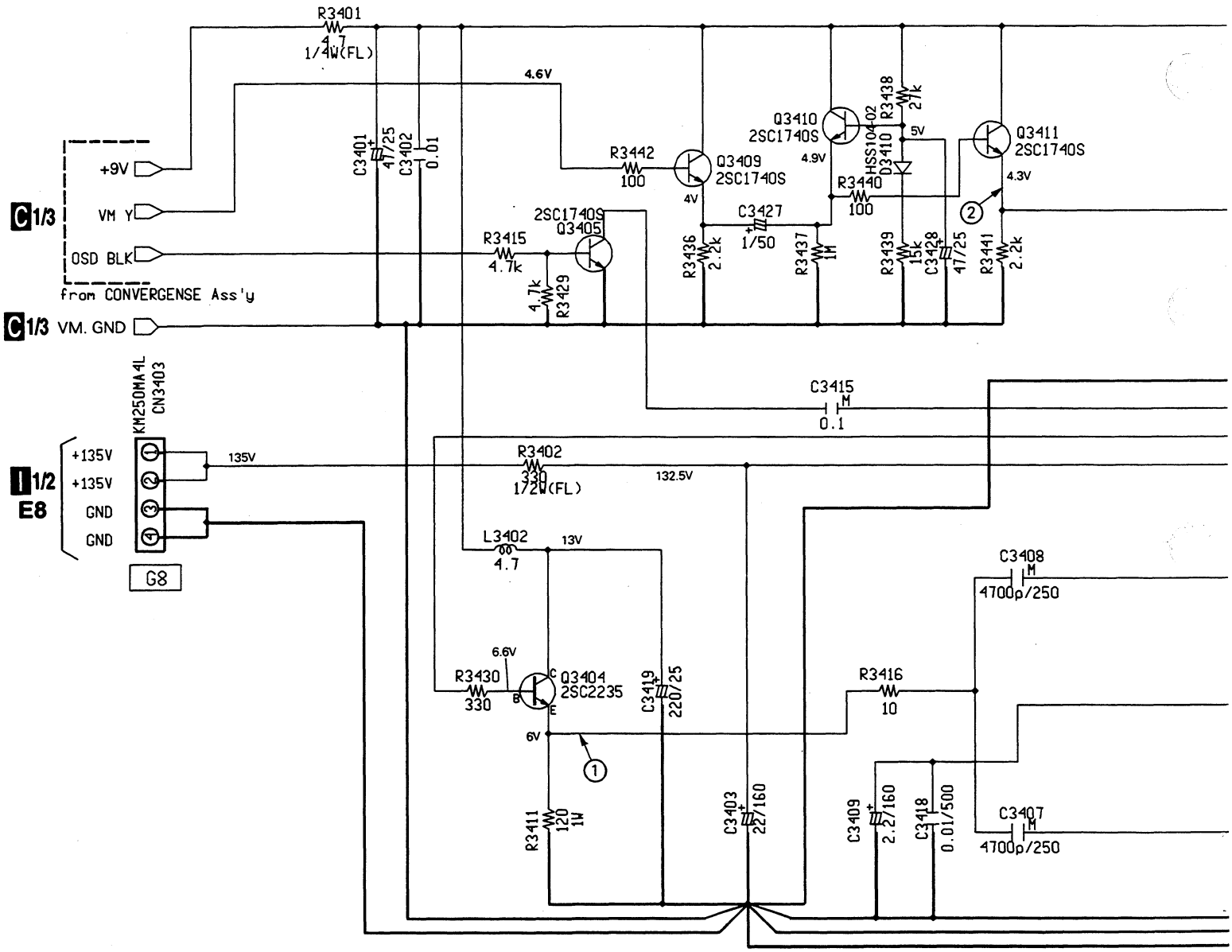

• Signal input : Cross-hatch

① **Upper: Q3404 Emitter**
V : 1V/div, H : 10µsec/div
② **Lower: Q3411 Emitter**
V : 0.5V/div, H : 10µsec/div
•AC range

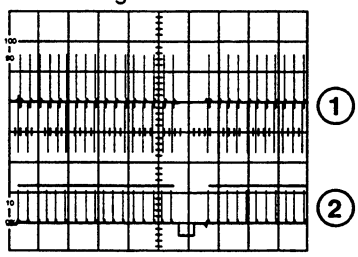

③ **G9- pin 3**
V : 20V/div, H : 2µsec/div
•AC range

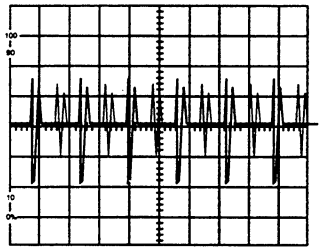

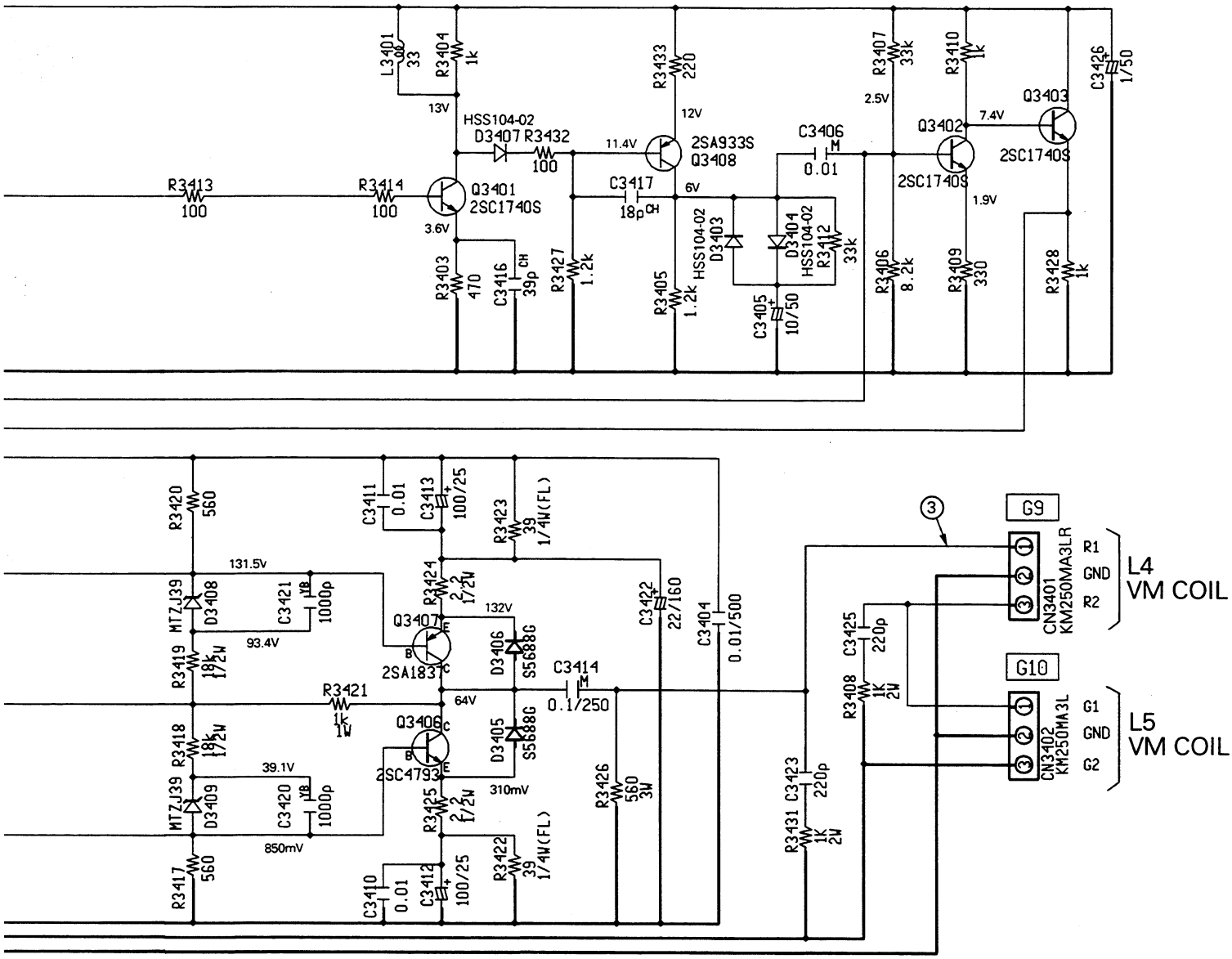

3.10 AMP ASSY (3/3)

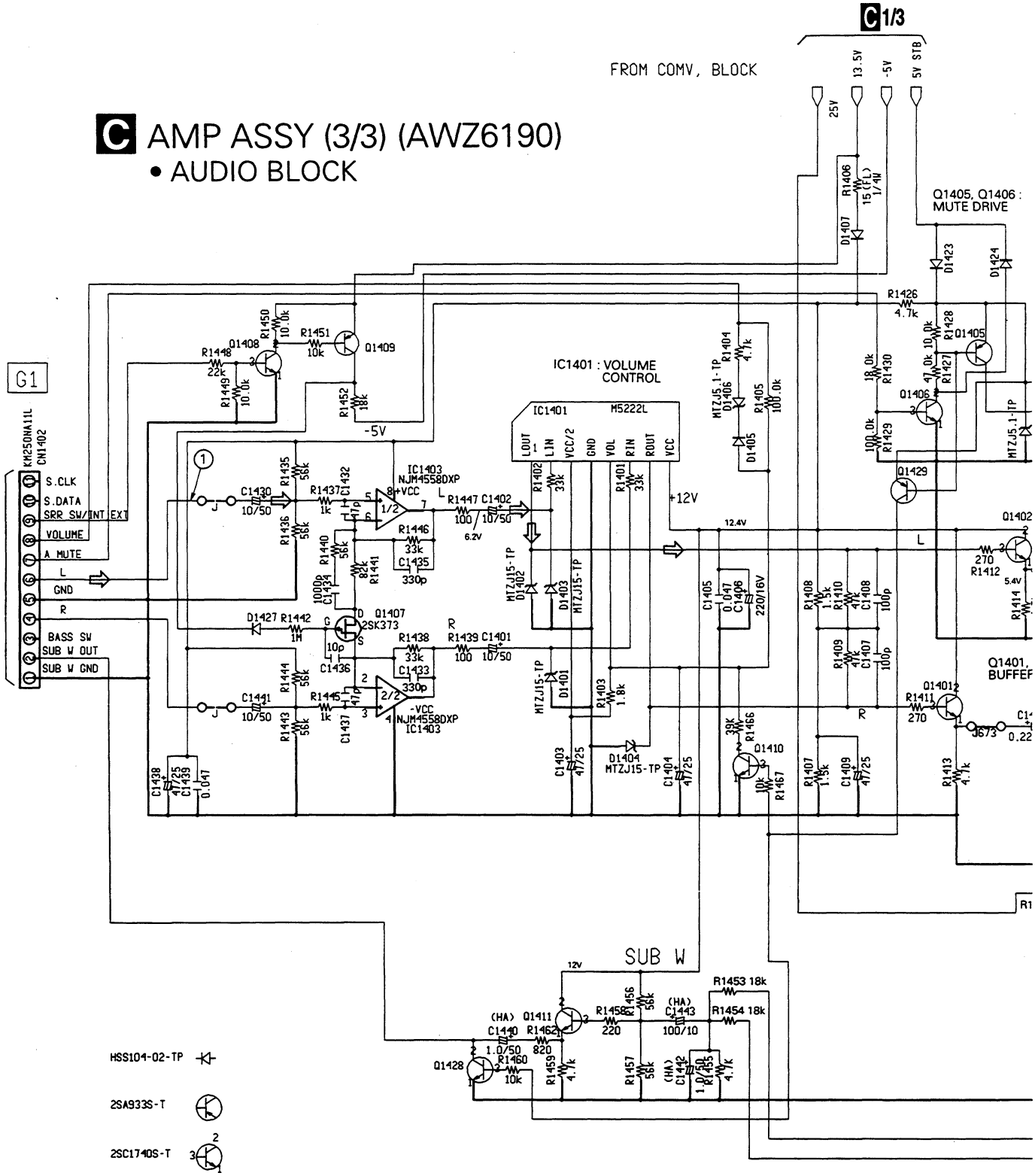

1. RESISTERS indicated in ,1/2W,1/4W,1/8W,1WFL,2WFL 5%.
tolerance unless otherwise noted K:K Ω,M:M Ω.
(F)+1%,(G)+2%,(K)+10%,(M)+20% tolerance.
2 CAPACITORS indicated in capacity (F)/(V) unless otherwise noted pF.
indicated without voltage is 50V except electrolytic capacitor

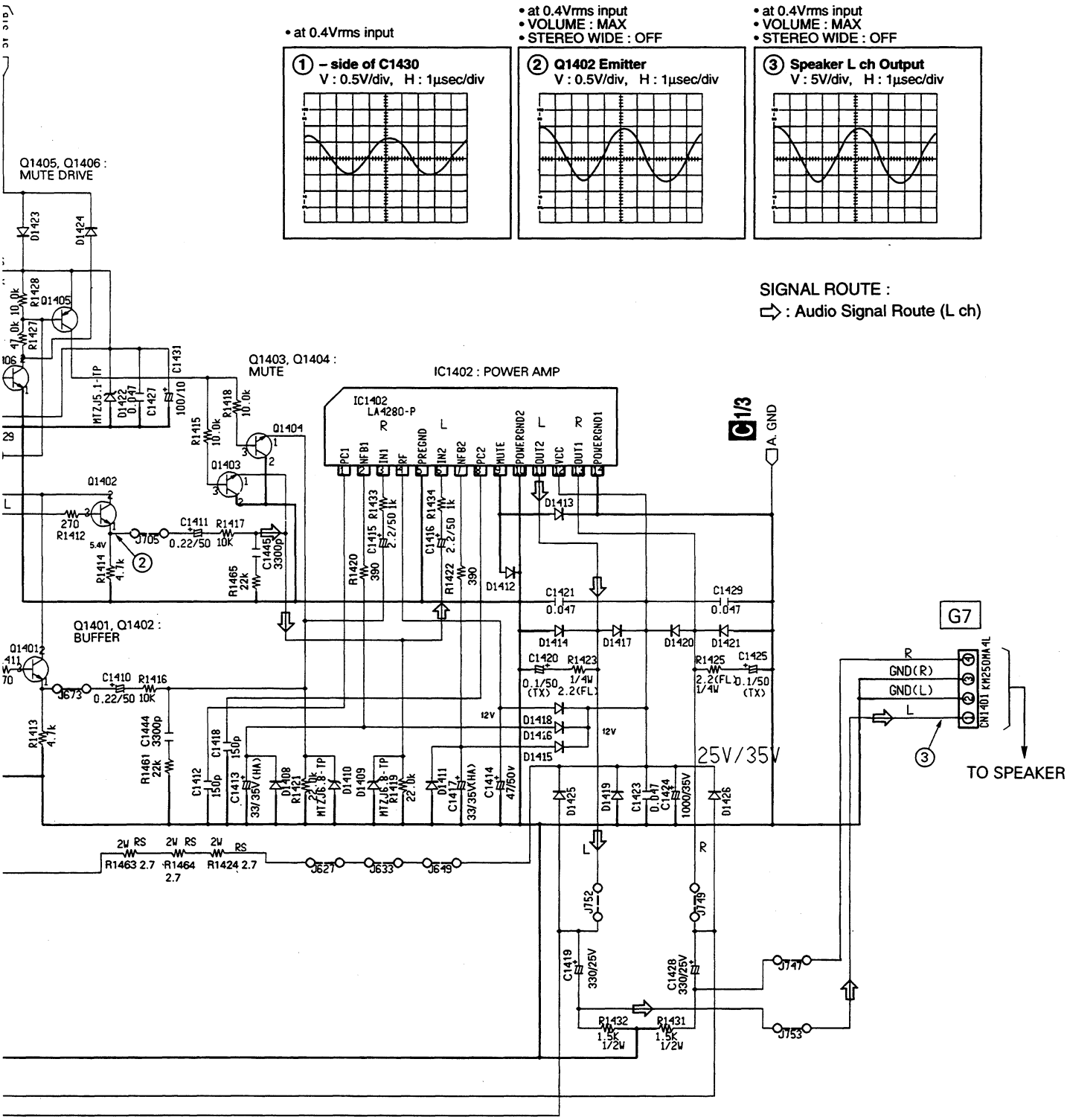
• at 0.4Vrms input
① – side of C1430
V : 0.5V/div, H : 1μsec/div
• at 0.4Vrms input
• VOLUME : MAX
• STEREO WIDE : OFF
② Q1402 Emitter
V : 0.5V/div, H : 1μsec/div
• at 0.4Vrms input
• VOLUME : MAX
• STEREO WIDE : OFF
③ Speaker L ch Output
V : 5V/div, H : 1μsec/div
SIGNAL ROUTE :
⇨ : Audio Signal Route (L ch)
Q1405, Q1406 : MUTE DRIVE
Q1403, Q1404 : MUTE
IC1402 : POWER AMP
IC1402 LA4280-P
Q1401, Q1402 : BUFFER
C1/3
A. GND
G7
GND(R)
GND(L)
CN1401 KM250MA4L
TO SPEAKER
25V/35V

3.11 CONVER CONTROL AND CONNECTOR B ASSEMBLIES

D-a

D CONVER CONTROL ASSY
(AWZ6195)

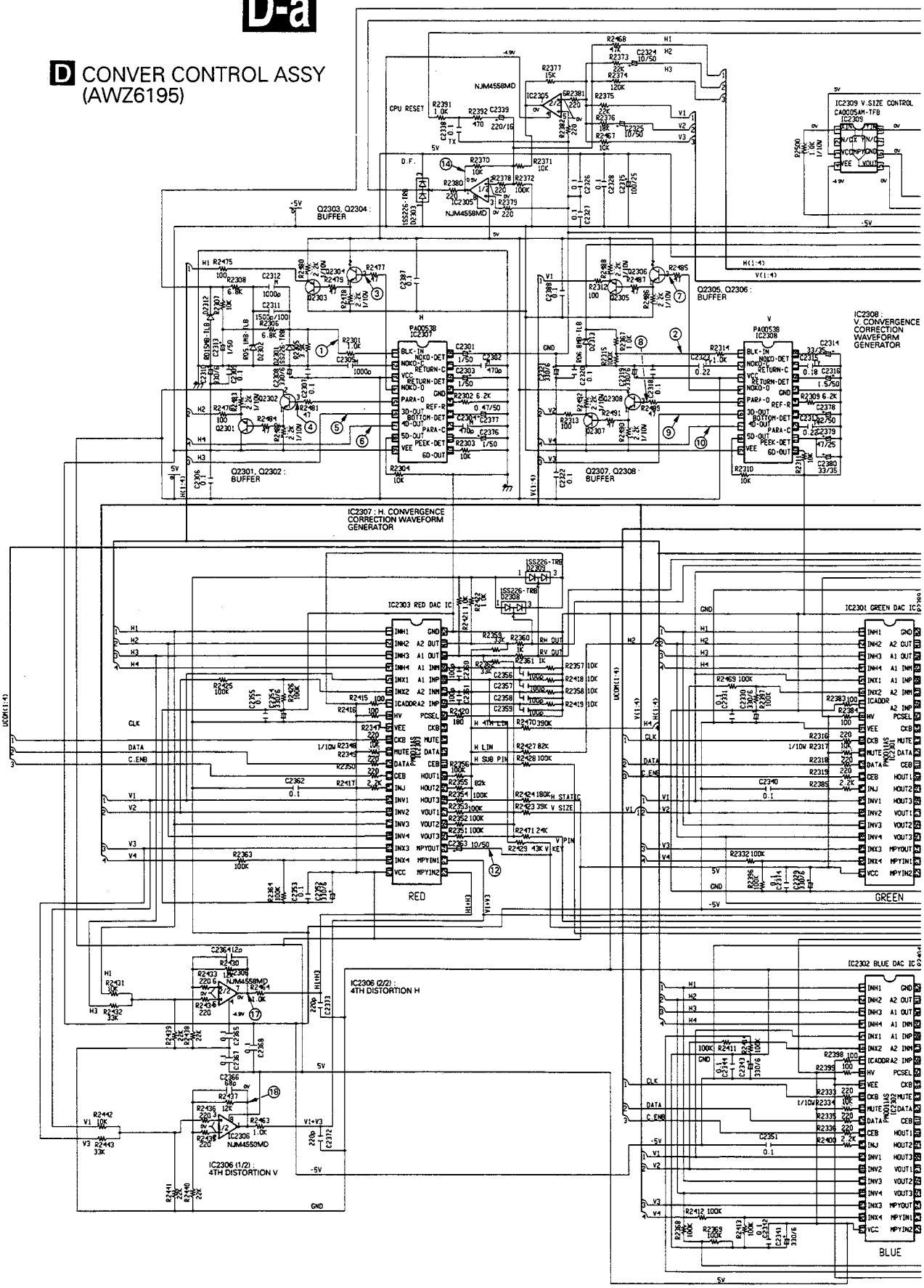

D-b

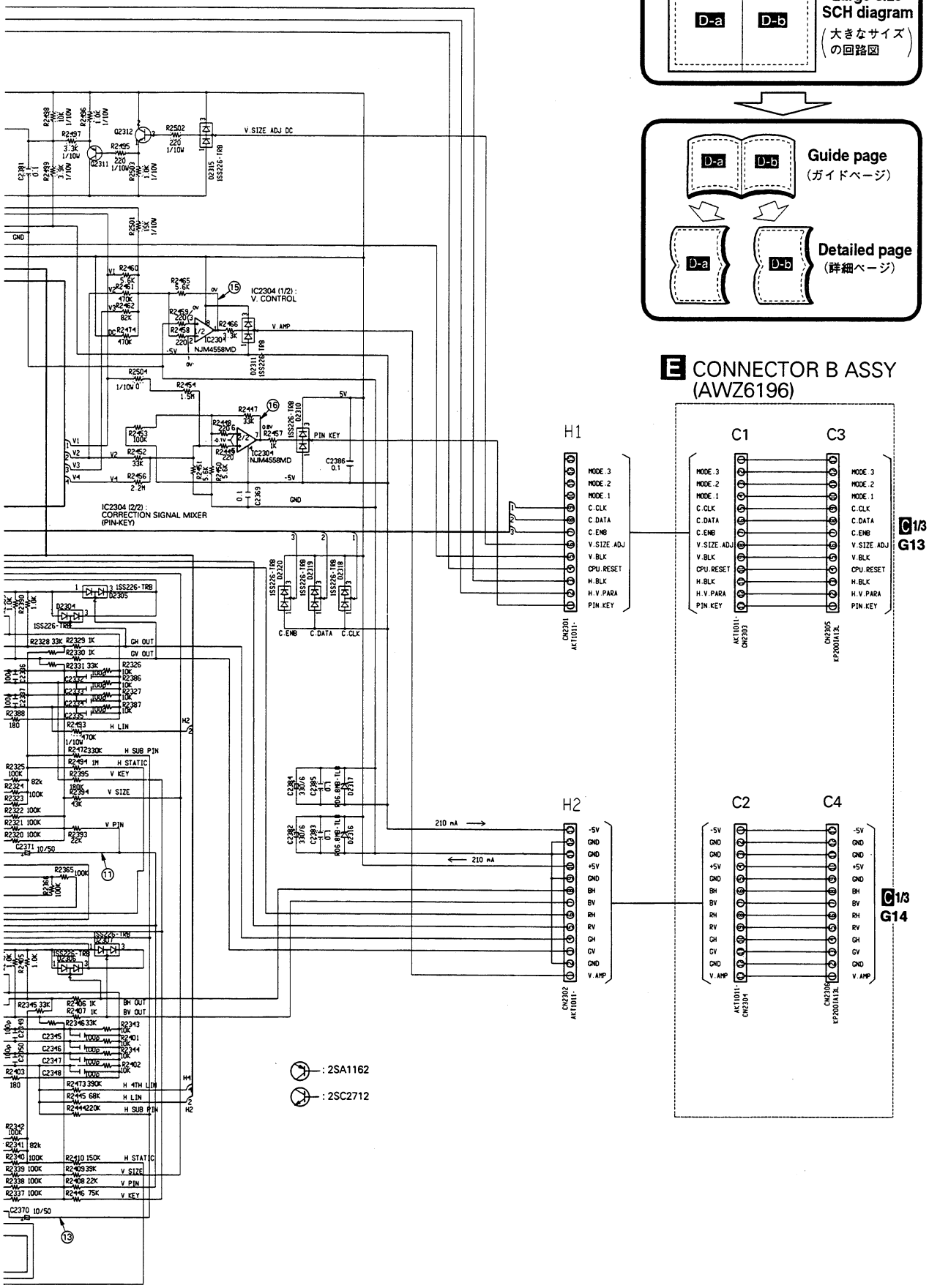
Large size SCH diagram
(大きなサイズの回路図)
D-a
D-b
Guide page
(ガイドページ)
Detailed page
(詳細ページ)
E CONNECTOR B ASSY
(AWZ6196)
H1
H2
C1
C3
C2
C4
C1/3
G13
C1/3
G14
IC2304 (1/2) :
V. CONTROL
IC2304 (2/2) :
CORRECTION SIGNAL MIXER
(PIN-KEY)
NJM4558MD
V.SIZE ADJ DC
V.AMP
PIN KEY
GND
210 mA
: 2SA1162
: 2SC2712

D-a D-b

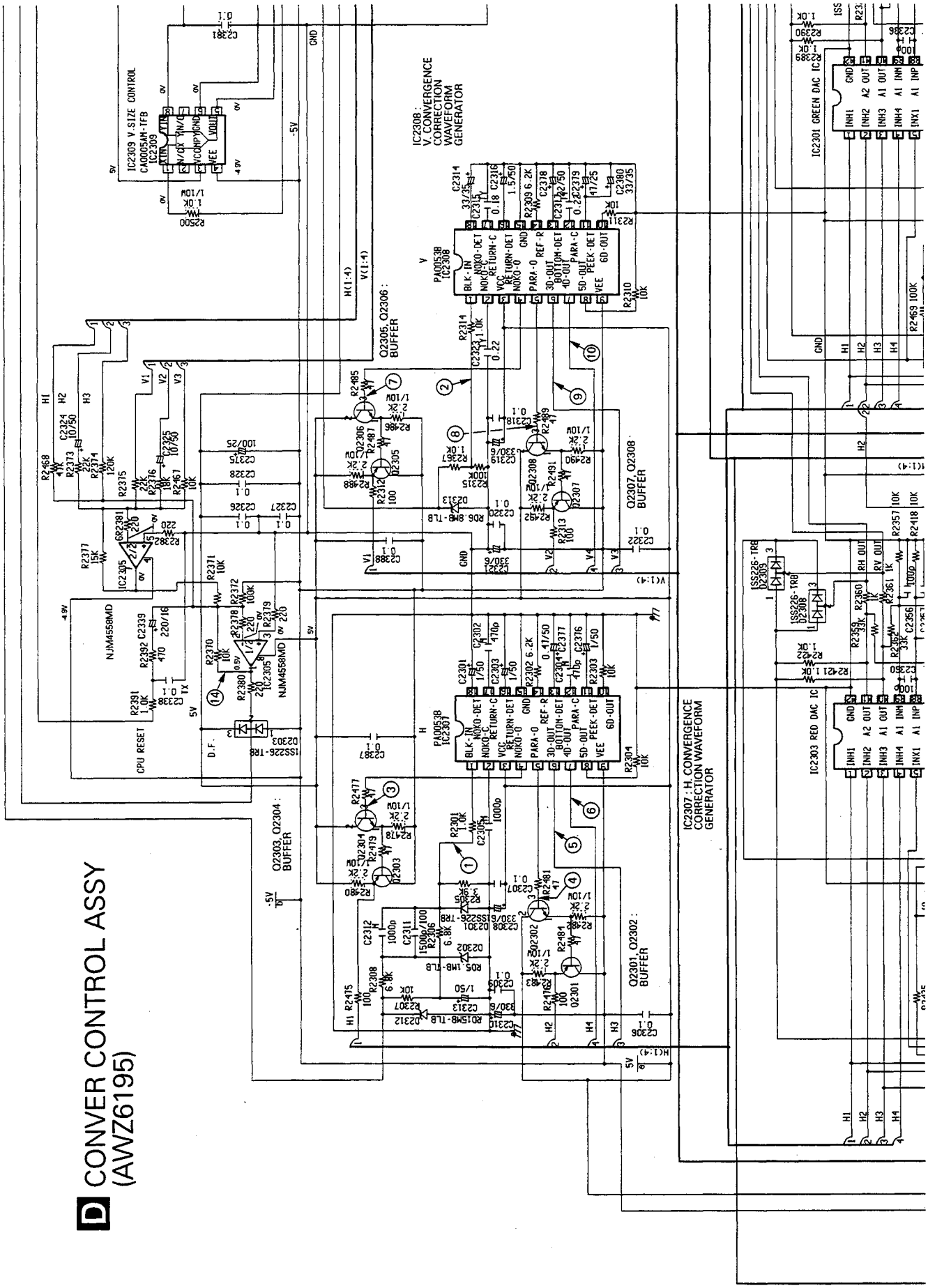

D CONVER CONTROL ASSY (AWZ6195)

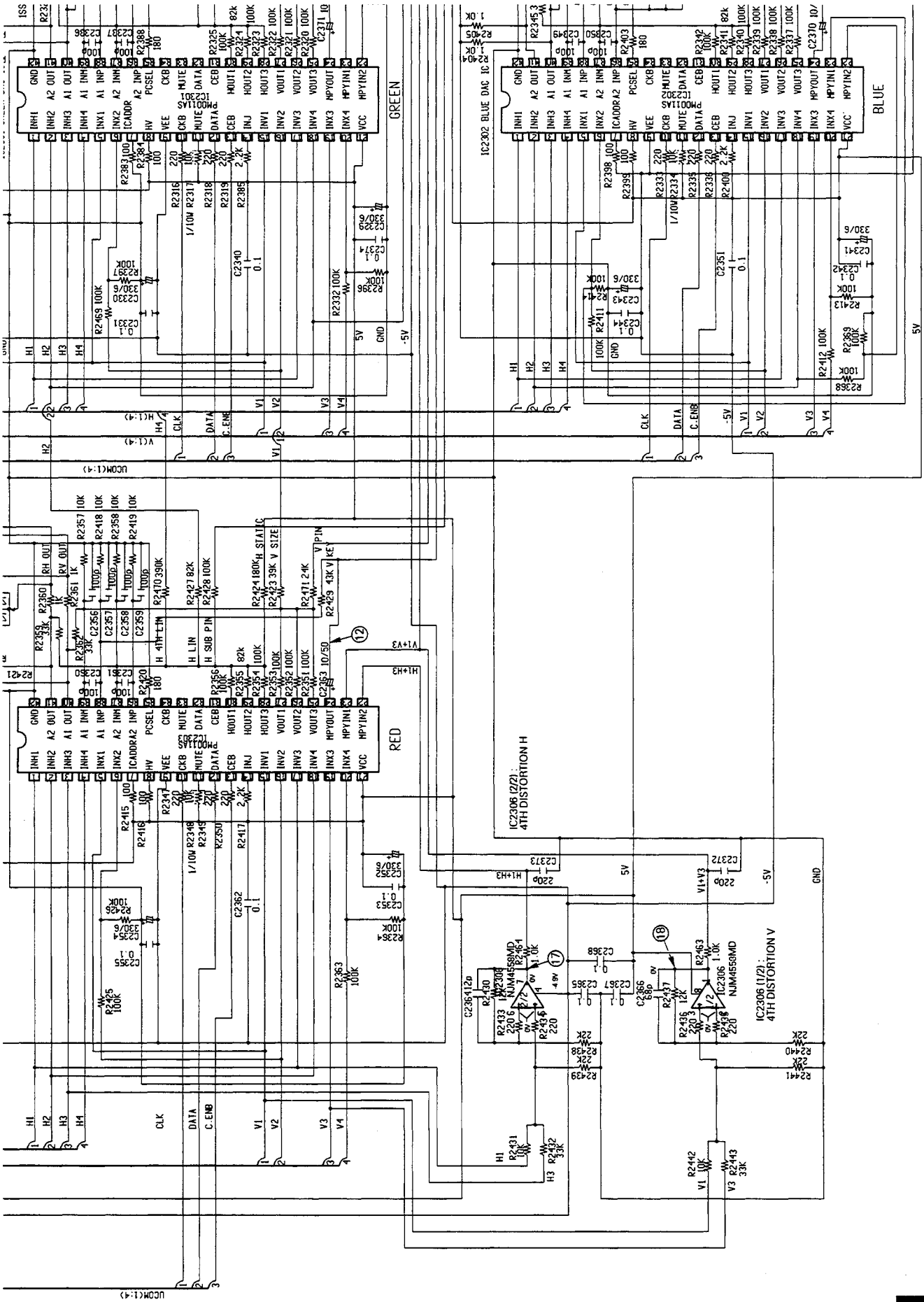
GREEN
BLUE
RED
IC2302 BLUE DAC
IC2306 (2/2) : 4TH DISTORTION H
IC2306 (1/2) : 4TH DISTORTION V
NJM4558MD
CLK
DATA
C.ENB
UCOM(1:4)
V(1:4)
H(1:4)
5V
-5V
GND

D-a D-b

D-a D-b

Notes

1. RESISTERS
   (RS):METAL OXIDE FILM RESISTER
   (RT):CEMENT RESISTER
   (RN):METAL FILM RESISTER
   (FL):NON FLAMMABLE RESISTER
   THE OTHERS:FIXED CHIP RESISTORS (1/10 W)
   Figures in pharentheses show the rated wattage.
   Those unspecified ones are of 1/4W.
   K:KΩ ,M:MΩ,Unspecified ones are of Ω

2. CAPACITORS
   (HA):Aluminium electrolytic capasitors
   p:pF,Unspecified ones are of uF
   Capacity/Voltage
   Unspecified ones are of 50V

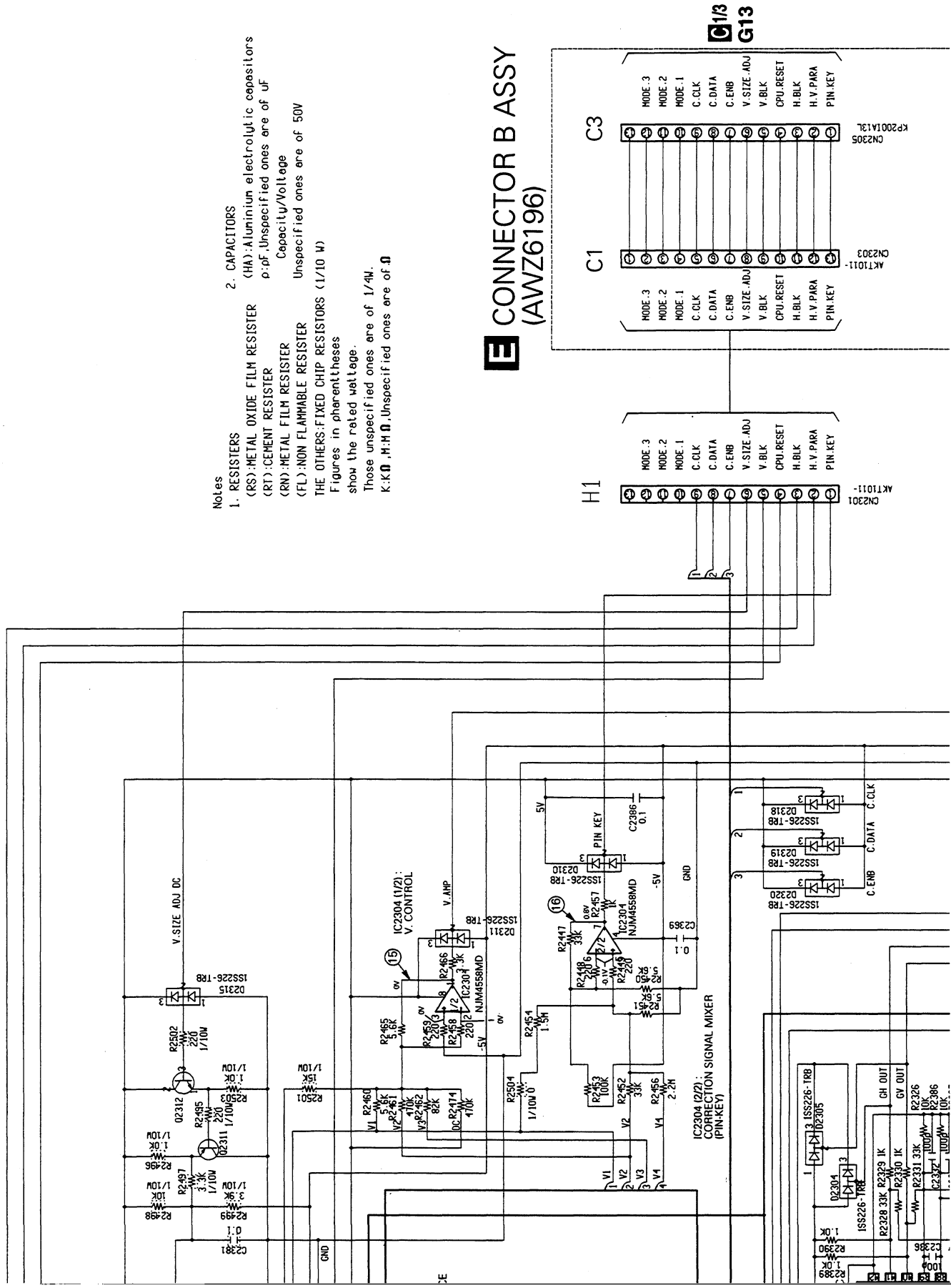

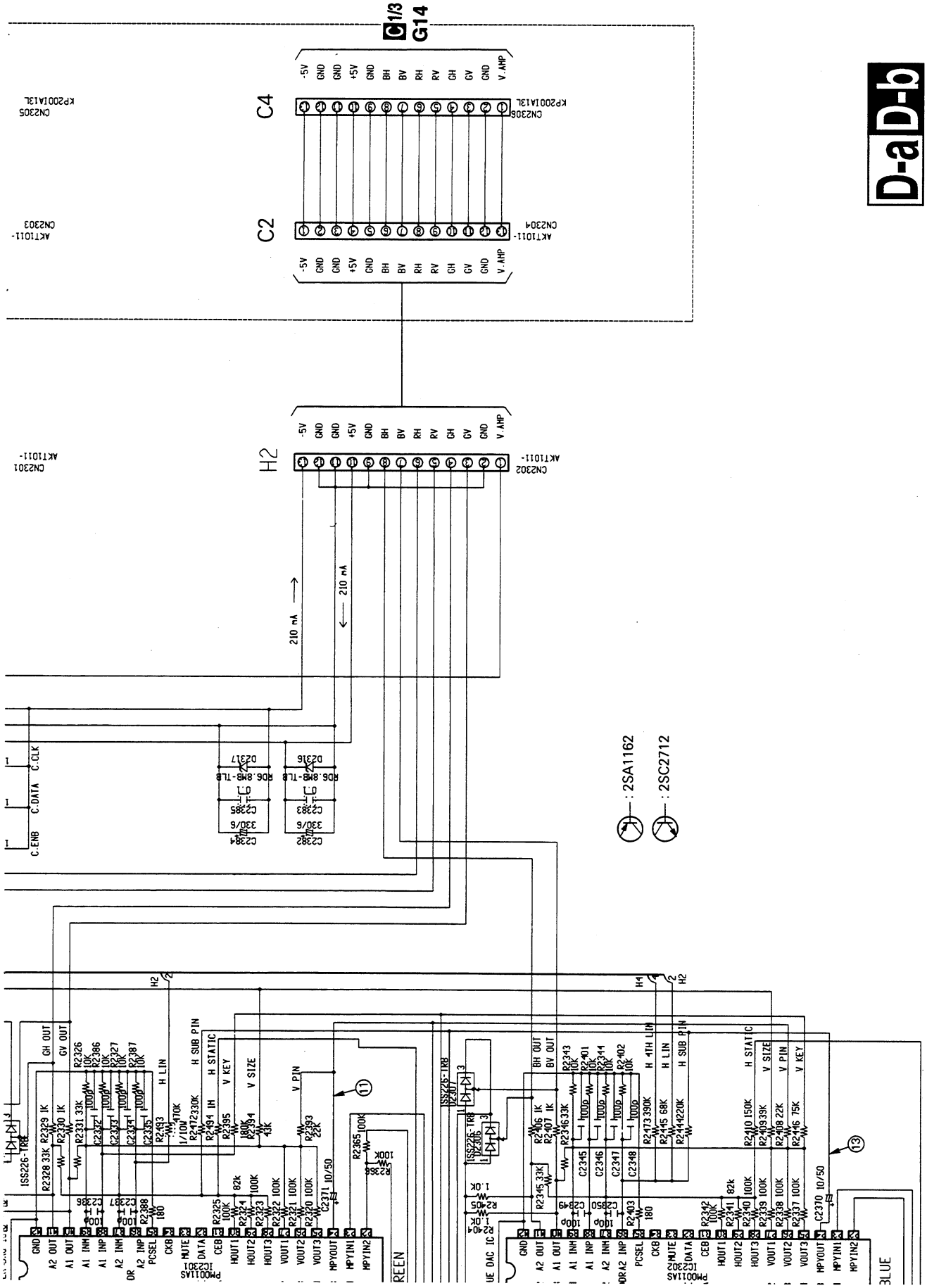
C 1/3
G14
C4
C2
H2
-5V
GND
+5V
BH
BV
RH
RV
GH
GV
V.AMP
210 mA
: 2SA1162
: 2SC2712
C.ENB
C.DATA
C.CLK
GH OUT
GV OUT
BH OUT
BV OUT
H SUB PIN
H STATIC
V KEY
V SIZE
V PIN
H LIN
H 4TH LIN
PCSEL
CKB
MUTE
DATA
CEB
HOUT1
HOUT2
HOUT3
VOUT1
VOUT2
VOUT3
MPYOUT
MPYIN1
MPYIN2
REEN
BLUE

3.12 R, G AND B CRT AMP ASSEMBLIES

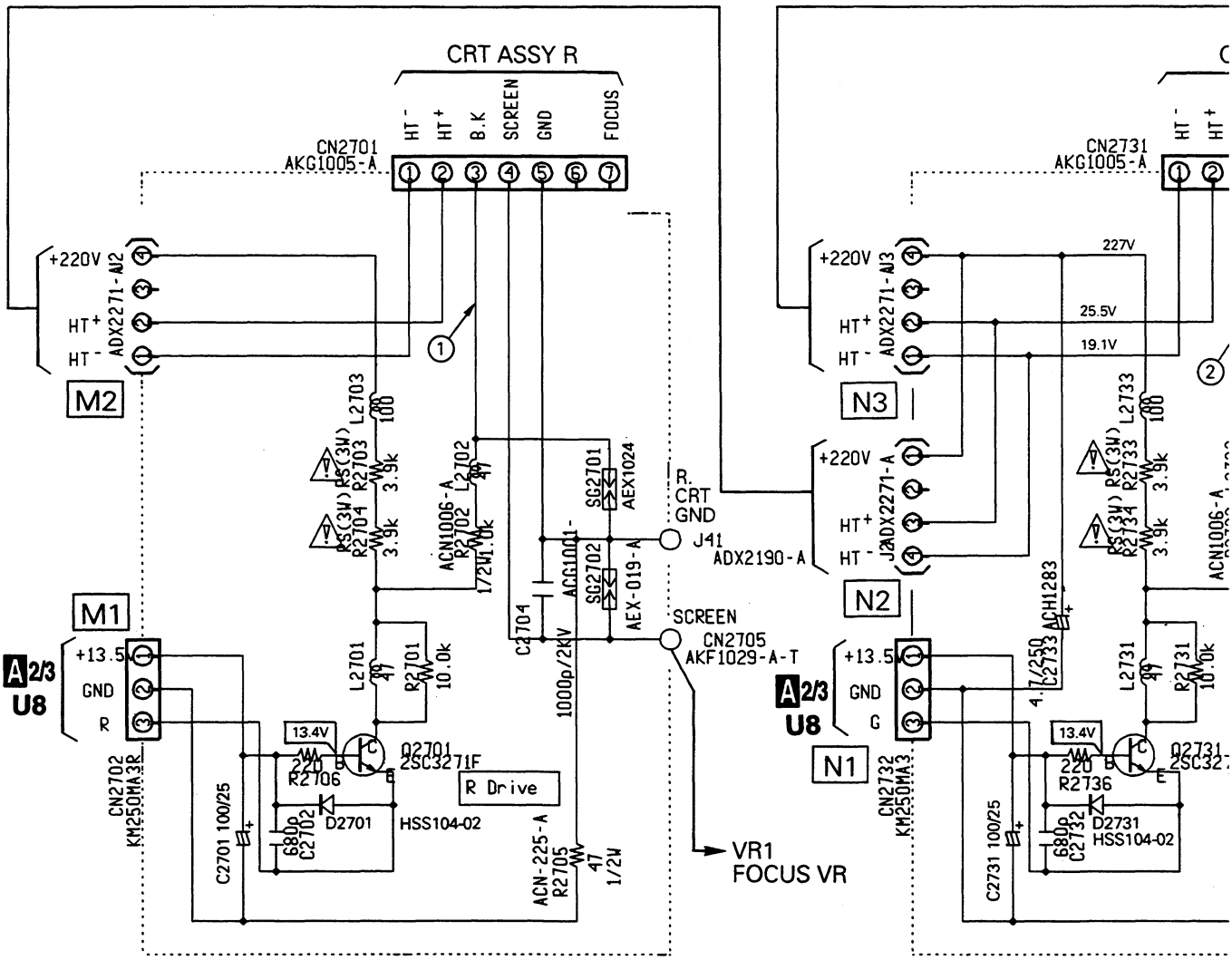

F R CRT AMP ASSY (AWZ6191)

G G CRT AMP ASS

1.RESISTORS

Indicated in ,1/4W,1/8W, 5% tolerance unless otherwise noted

K:KΩ M:MΩ

2.CAPACITORS

Indicated in capacity (F)/voltage (V) unless otherwise noted p:pF.

Indication without voltage is 50V except electrolytic capacitor.

* C2703,2733,2763 : ACH-378-0
* C2704,C2734,C2764 : ACG1001-A-F

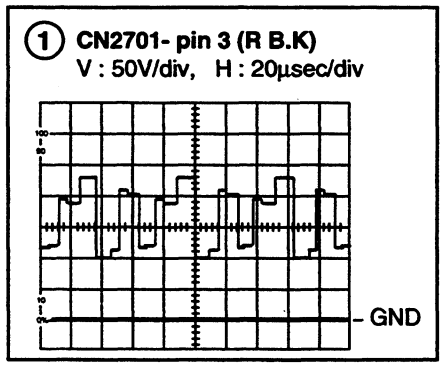

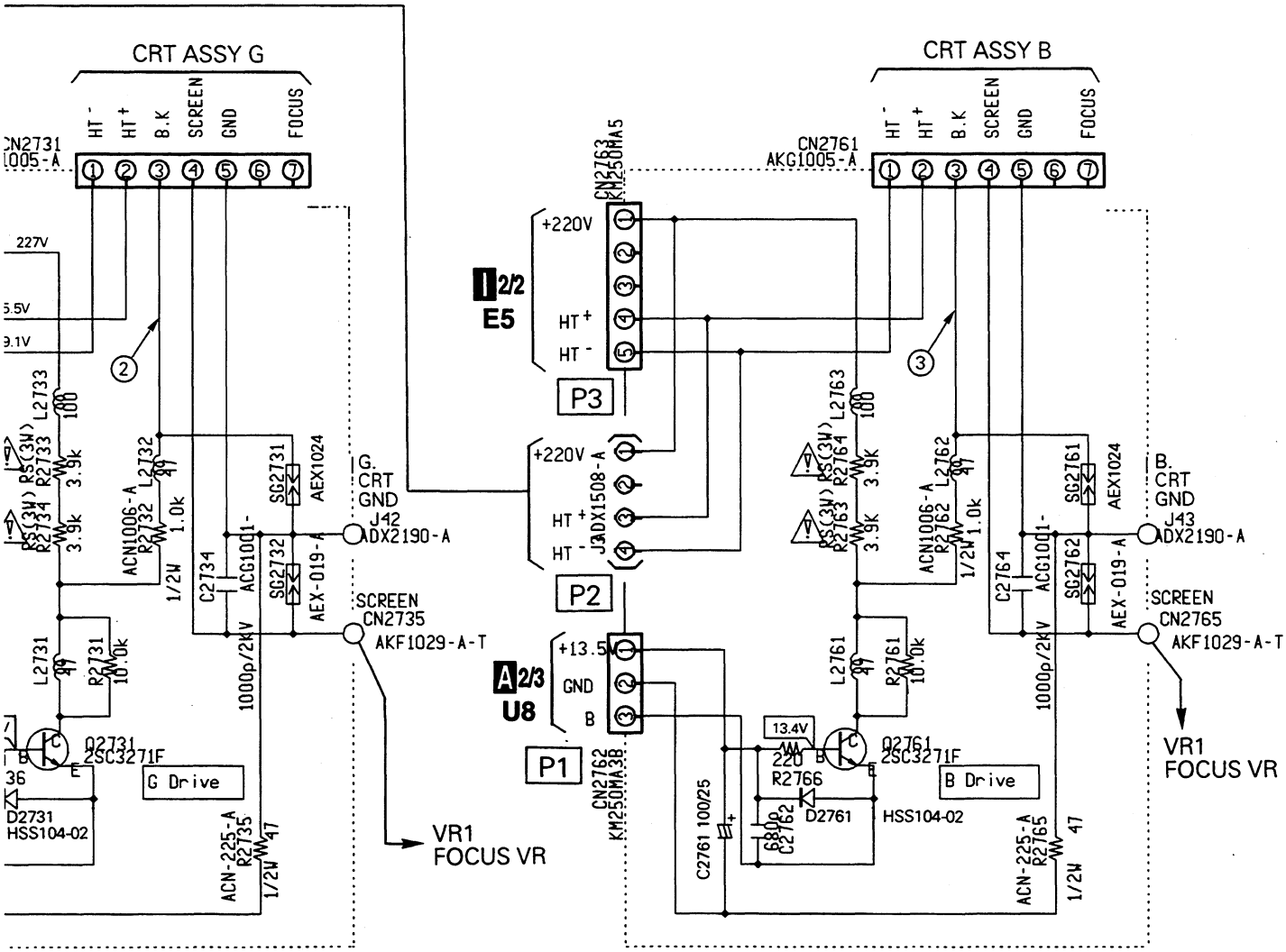

MP ASSY (AWZ6192)

H B CRT AMP ASSY (AWZ6193)

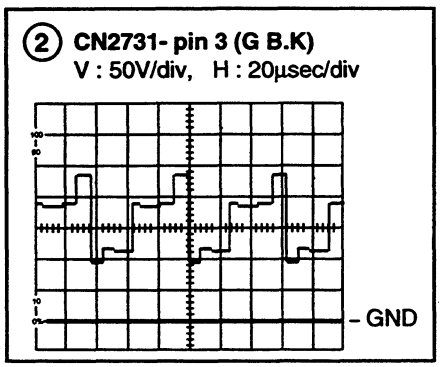

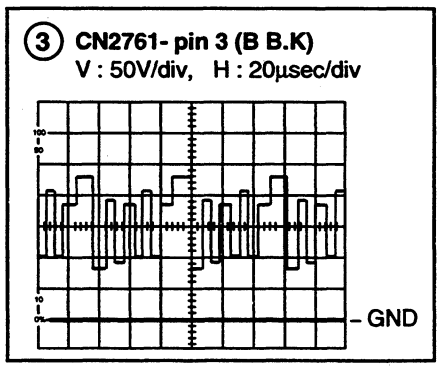

3.13 POWER SUPPLY SERVICE ASSY (1/2)

: CHARGED SECTION

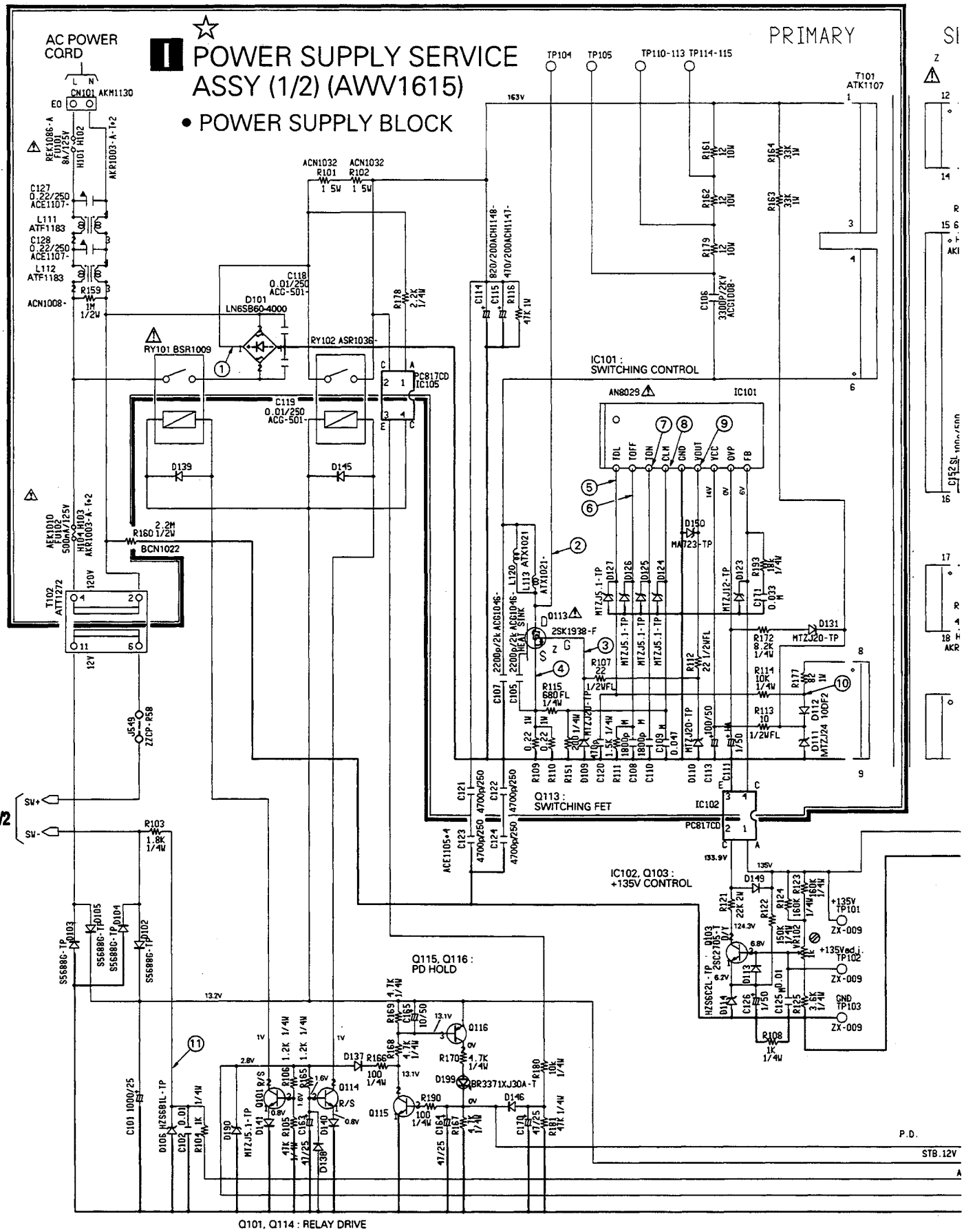

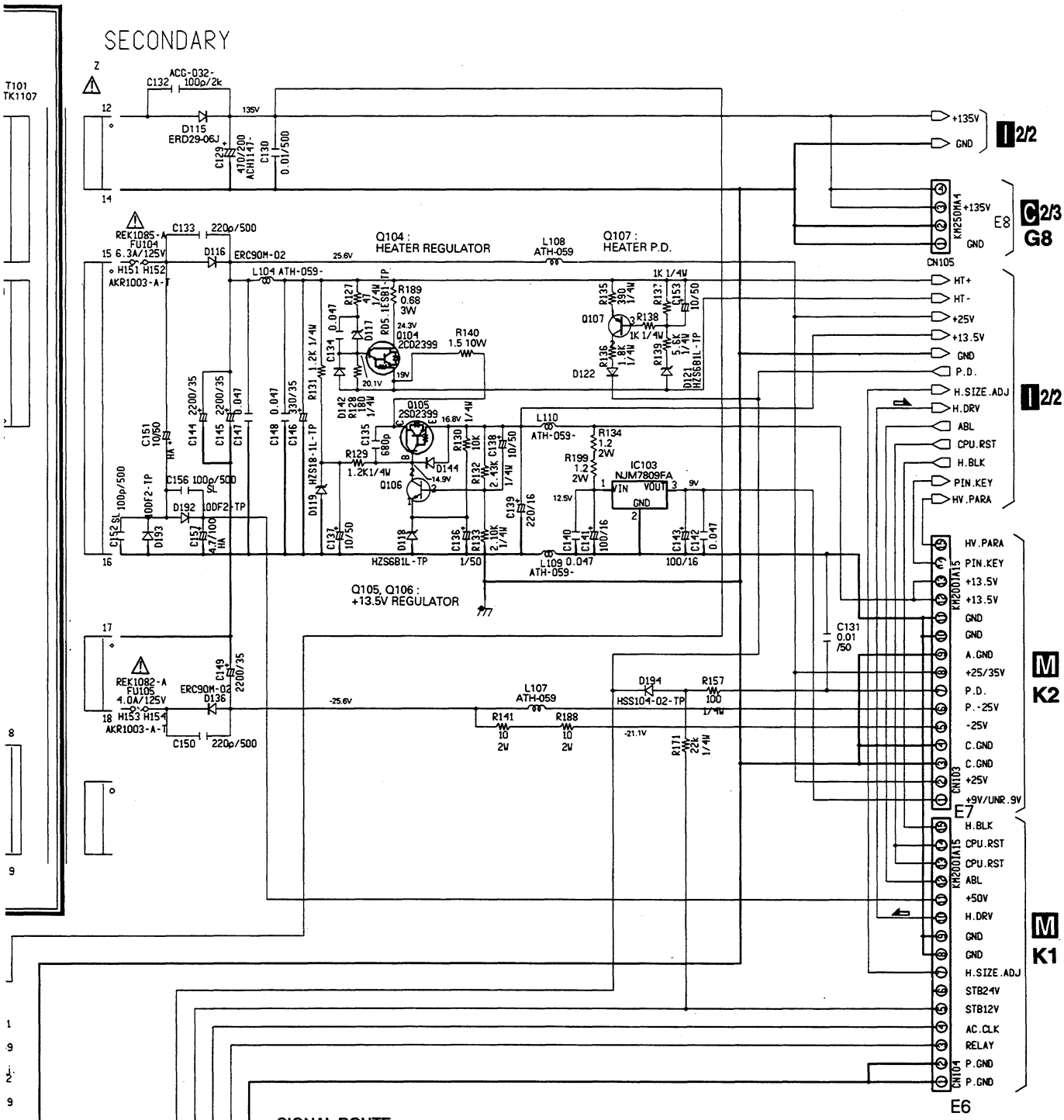

SIGNAL ROUTE :

: H. deflection Signal Route

1.RESISTORS
(RS);METAL OXIDE FILM RESISTOR
(RT);CEMENT RESISTOR
(RN);METAL FILM RESISTOR
(FL);NONFLAMMABLE RESISTOR
THE OTHERS;CARBONFILM RESISTOR

Those unspecified ones are of 1/4W
k;kΩ,M;MΩ,Unspecified ones are of Ω

2.CAPACITORS
p;pF,Unspecified ones are of μF
Capacity / Voltage (;A.C,no mark;D.C)
Unspecified ones are of 50V

3.The ⚠ mark found on some component parts indicates the importance of the safety factor of the parts.
Therefore,when replacing,be sure to use parts of identical de-signation.

P.D.
STB.12V
AC.CLK
RELAY
P.GND

Q 2SC1740S-T R/S

Q 2SA933S-T R/S

HSS104-02-TP

3.14 POWER SUPPLY SERVICE ASSY (2/2)

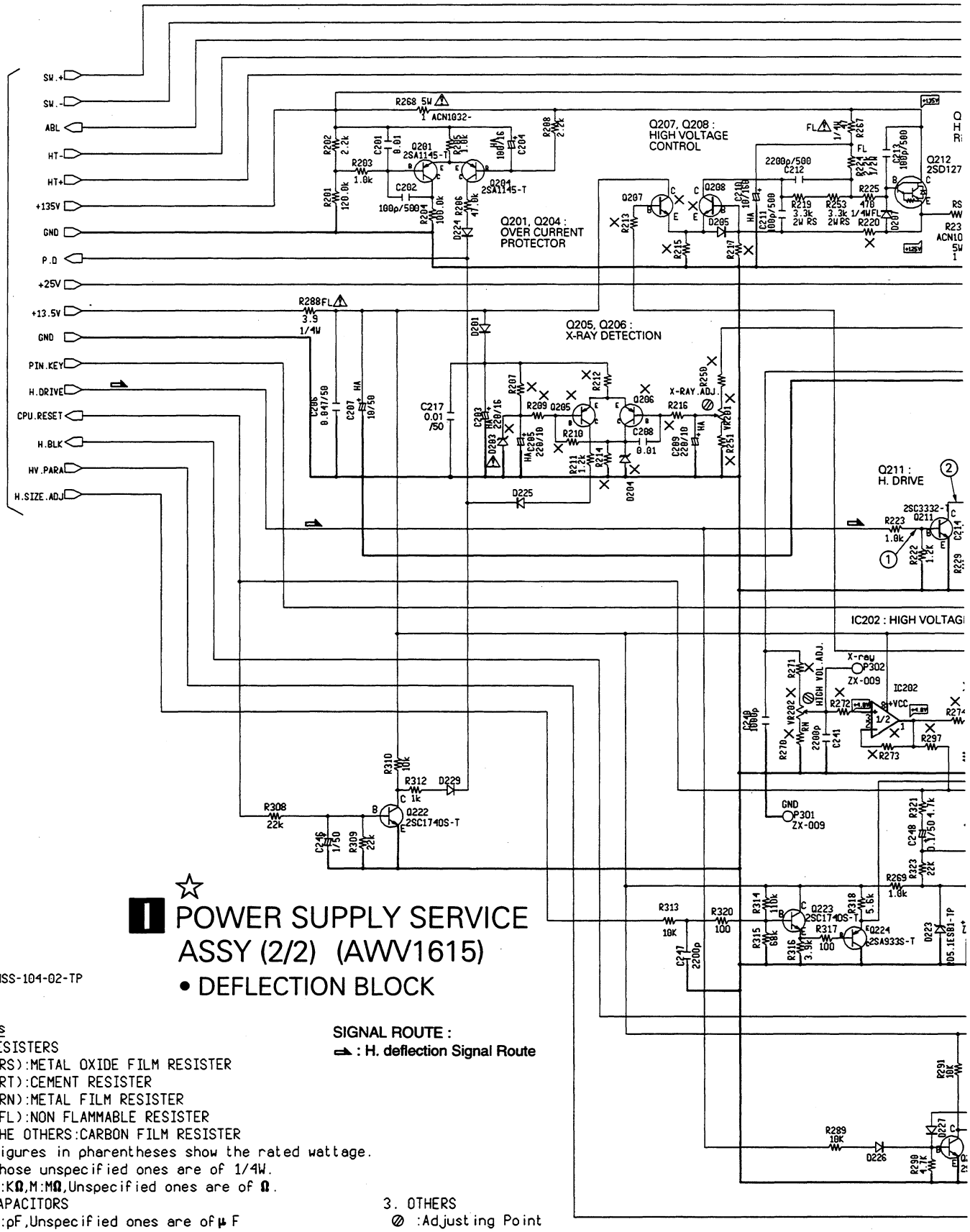

POWER SUPPLY SERVICE ASSY (2/2) (AWV1615)

- DEFLECTION BLOCK

SIGNAL ROUTE :

: H. deflection Signal Route

Notes

1. RESISTERS
   (RS):METAL OXIDE FILM RESISTER
   (RT):CEMENT RESISTER
   (RN):METAL FILM RESISTER
   (FL):NON FLAMMABLE RESISTER
   THE OTHERS:CARBON FILM RESISTER
   Figures in pharentheses show the rated wattage.
   Those unspecified ones are of 1/4W.
   K:KΩ,M:MΩ,Unspecified ones are of Ω.
2. CAPACITORS
   p:pF,Unspecified ones are of μF
   Capacity/Voltage
   Unspecified ones are of 50V
3. OTHERS
   ⊘ :Adjusting Point
   The ⚠ mark found on same component parts indicates the importance of the safety factor of the part. Therefore,when replacing,be sure to use parts of identical designation.

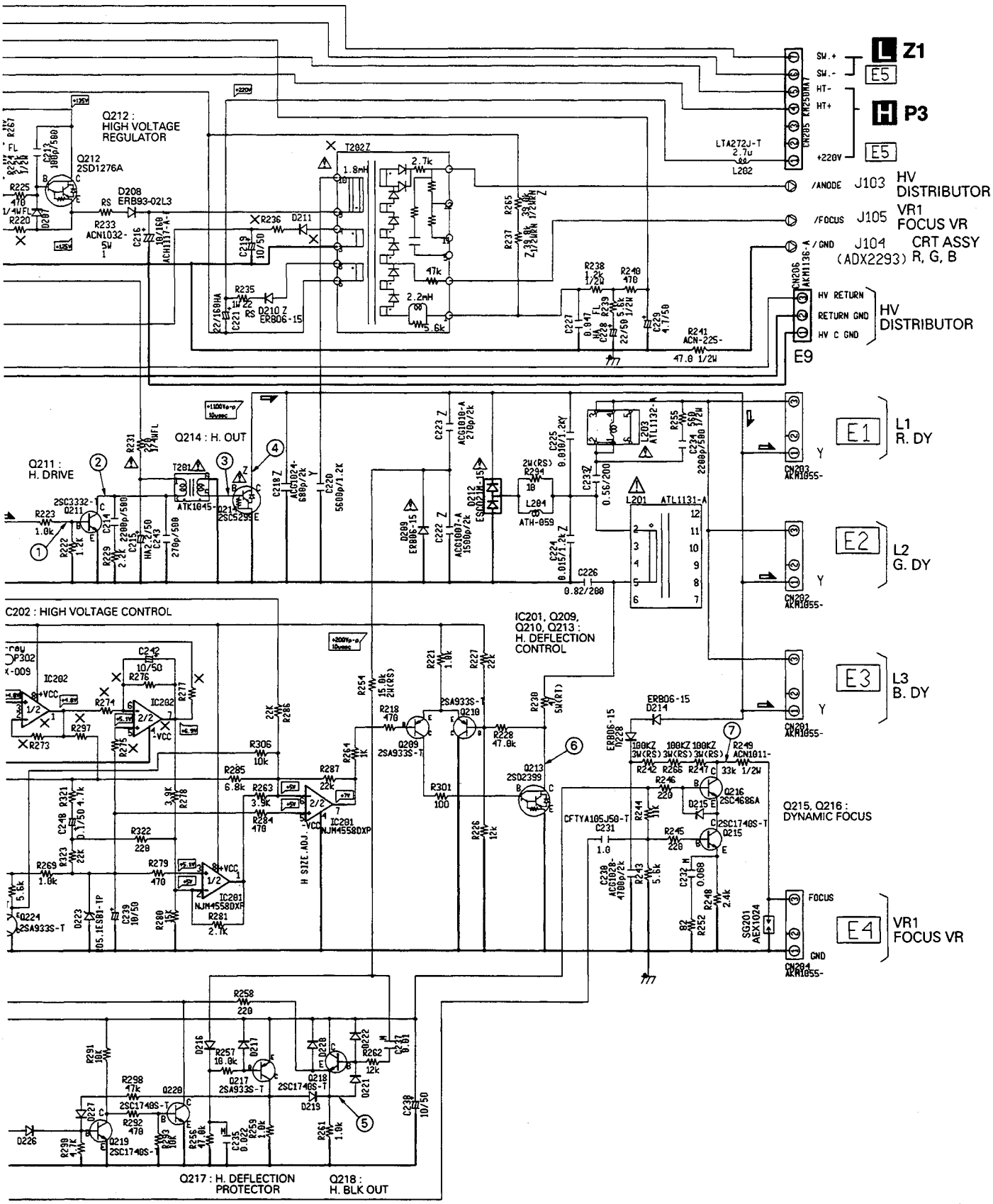
Q212 : HIGH VOLTAGE REGULATOR
Q212 2SD1276A
D208 ERB93-02L3
T202Z
L202 LTA272J-T 2.7u
SW.+
SW.-
HT-
HT+
+220V
CN205 KM250MA7
L Z1
E5
H P3
E5
/ANODE J103 HV DISTRIBUTOR
/FOCUS J105 VR1 FOCUS VR
/GND J104 CRT ASSY (ADX2293) R, G, B
CN206 AKM1136-A
HV RETURN
RETURN GND
HV C GND
HV DISTRIBUTOR
E9
Q214 : H. OUT
Q211 : H. DRIVE
2SC3332-Q
2SC5299-E
ATK1645-
L201 ATL1131-A
L204 ATH-059
E1 L1 R. DY
E2 L2 G. DY
E3 L3 B. DY
CN203 AKM1055-
CN202 AKM1055-
CN201 AKM1055-
C202 : HIGH VOLTAGE CONTROL
IC202
IC201 NJM4558DXP
IC201, Q209, Q210, Q213 : H. DEFLECTION CONTROL
Q209 2SA933S-T
Q210 2SA933S-T
Q213 2SD2399
Q215, Q216 : DYNAMIC FOCUS
Q216 2SC4686A
Q215 2SC1740S-T
CFTYA105J50-T
SG201 AEX1024
FOCUS
GND
E4 VR1 FOCUS VR
CN204 AKM1055-
H SIZE ADJ
Q217 : H. DEFLECTION PROTECTOR
Q218 : H. BLK OUT
Q217 2SA933S-T
Q218 2SC1740S-T
Q219 2SC1740S-T
Q220 2SC1740S-T
Q224 2SA933S-T

3.15 FRONT CONTROL, INDICATOR, POWER SW AND CONNECTOR A ASSEMBLIES

J FRONT CONTROL ASSY (AWZ6186)

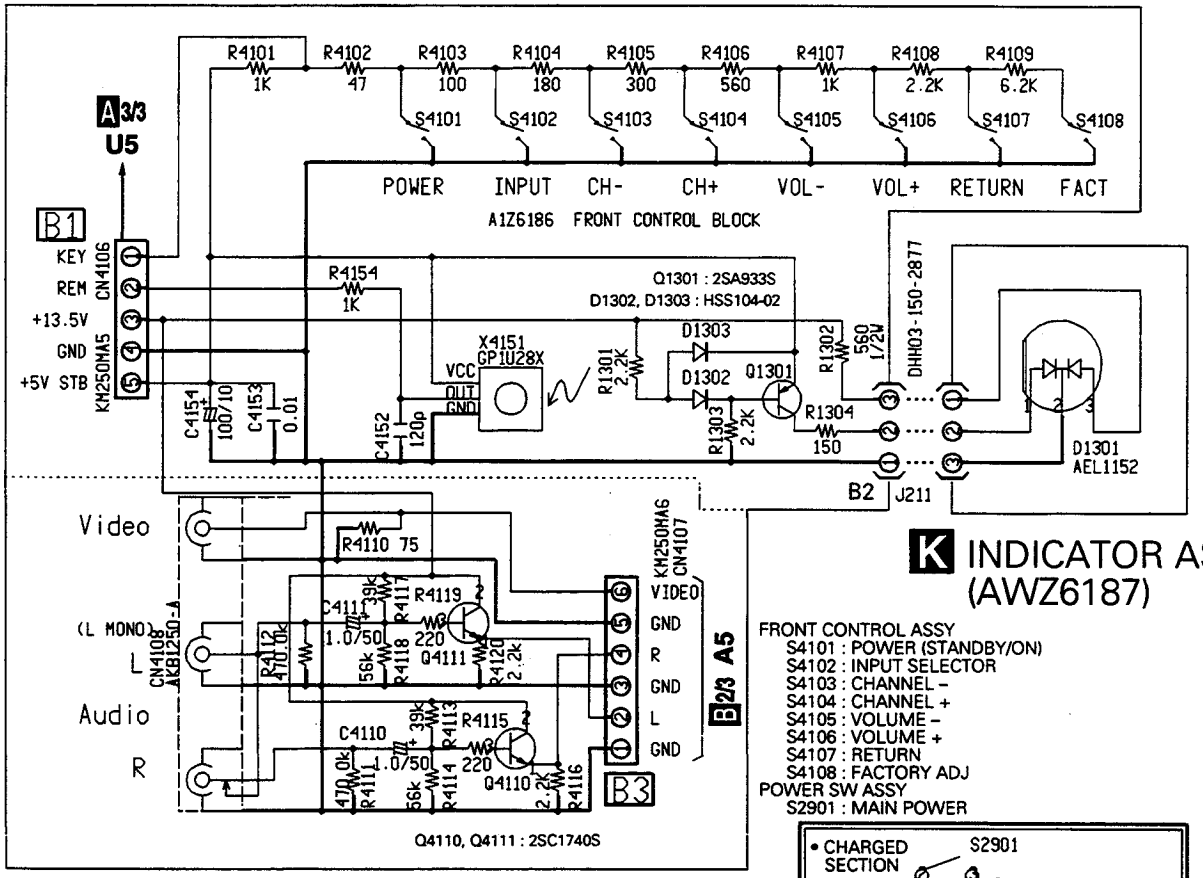

K INDICATOR ASSY (AWZ6187)

FRONT CONTROL ASSY
- S4101 : POWER (STANDBY/ON)
- S4102 : INPUT SELECTOR
- S4103 : CHANNEL –
- S4104 : CHANNEL +
- S4105 : VOLUME –
- S4106 : VOLUME +
- S4107 : RETURN
- S4108 : FACTORY ADJ

POWER SW ASSY
- S2901 : MAIN POWER

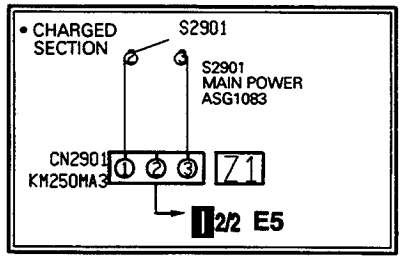

L POWER SW ASSY (AWZ6188)

M CONNECTOR A ASSY (AWZ6189)

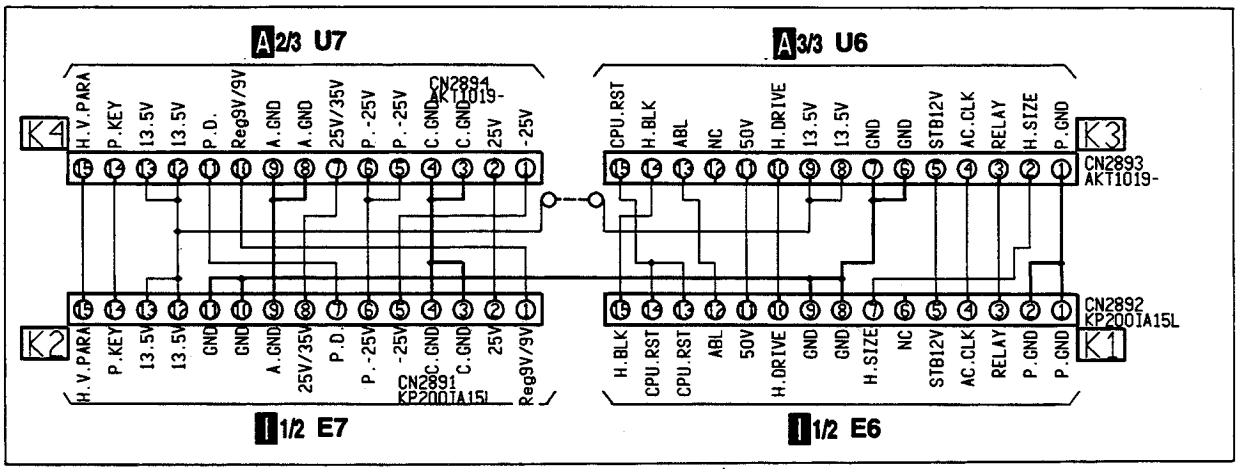

3.16 WAVEFORMS AND VOLTAGES

A 1/3 TUNER • VIDEO ASSY (1/3)
• TUNER BLOCK

- Input signal : 9ch (Air 187.25MHz)
- Video signal : Color bar (87.5% Mod., 1kHZ ±25kHz dev.), 60dBμ input
- Range : DC range (Unless otherwise noted)

① **TV FRONT END pin 18 (VI)**
V : 1V/div, H : 20μsec/div

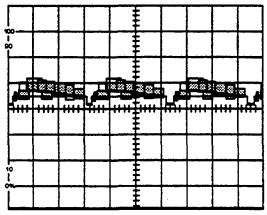

③ **D4508 Cathode (TV L)**
V : 1V/div, H : 0.5msec/div

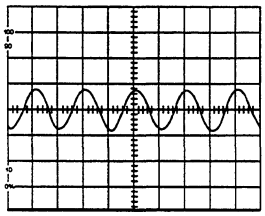

⑤ **Foot of R4538 (H SYNC 1)**
V : 1V/div, H : 20μsec/div

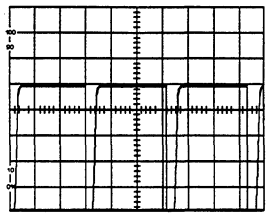

⑦ **J704 (MPX)**
V : 1V/div, H : 0.5msec/div

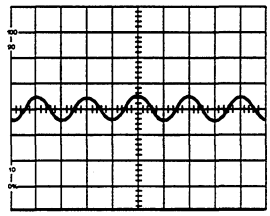

② **J697 (TV V1)**
V : 1V/div, H : 20μsec/div

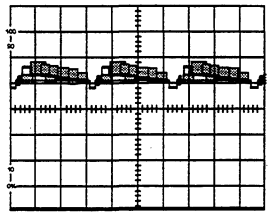

④ **D4509 Cathode (TV R)**
V : 1V/div, H : 0.5msec/div

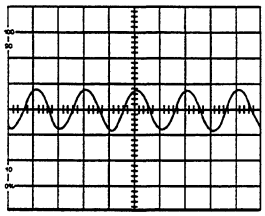

⑥ **Q4502 Emitter (AFT 1)**
V : 1V/div, H : 20μsec/div

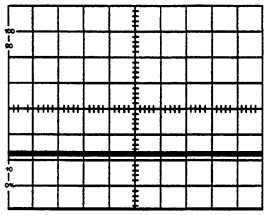

TV FRONT END (AXF1084)

Pin No.	Voltage (V)	Pin No.	Voltage (V)
1	5.4	10	NC
2	5.4	11	0
3	GND	12	0
4	–	13	9
5	–	14	4.5
6	9	15	GND
7	5	16	2.2
8	NC	17	NC
9	33	18	4.7

IC4501 (CXA1734S)

Pin No.	Voltage (V)	Pin No.	Voltage (V)	Pin No.	Voltage (V)	Pin No.	Voltage (V)
1	–	10	5.2	19	4	28	4
2	–	11	4	20	4	29	4
3	GND	12	4.4	21	4	30	NC
4	GND	13	4	22	1.8		
5	1.3	14	4	23	4		
6	1.3	15	9	24	4		
7	4	16	3	25	4		
8	4	17	GND	26	2		
9	6.4	18	4	27	1.3		

A 2/3 TUNER • VIDEO ASSY (2/3)
• VIDEO BLOCK

IC501 (TA8845BN)

Pin No.	Voltage (V)	Pin No.	Voltage (V)	Pin No.	Voltage (V)	Pin No.	Voltage (V)	Pin No.	Voltage (V)	Pin No.	Voltage (V)	Pin No.	Voltage (V)	Pin No.	Voltage (V)
1	0	9	0	17	0	25	0	33	0	41	9.3	49	0	57	4.8
2	0	10	5.4	18	3.4	26	1.7	34	5.5	42	6.3	50	6.5	58	4.8
3	5.2	11	0.8	19	3.6	27	0	35	5.5	43	9.2	51	4.9	59	5
4	7.2	12	7.1	20	3.5	28	0	36	0	44	0	52	6.5	60	0
5	NC	13	1.1	21	12.5	29	4.5	37	9.2	45	0	53	5.7	61	2.6
6	2.4	14	0	22	0	30	4.4	38	9.2	46	9.1	54	3.3	62	4.4
7	8.7	15	4.2	23	0	31	4.5	39	4.9	47	3.1	5	8.7	63	0
8	2.1	16	4.2	24	0	32	1.9	40	6.2	48	12.5	56	4.8	64	0

- Input signal : Color bar (87.5% Mod., 1kHZ ± 25kHz dev.)
- Picture quality : STANDARD
- Range : DC range (Unless otherwise noted)

① **IC501-pin 58**
V : 1V/div, H : 20μsec/div

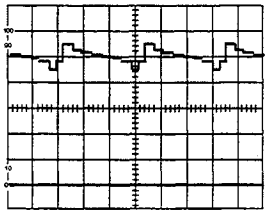

④ **IC501-pin 62**
V : 0.1V/div, H : 5msec/div

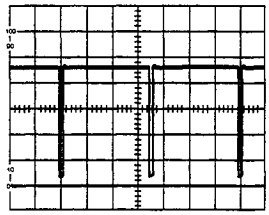

⑦ **D523 Cathode**
V : 1V/div, H : 20μsec/div

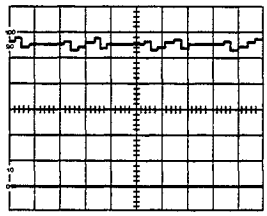

⑩ **Q532 Collector**
V : 1V/div, H : 20μsec/div

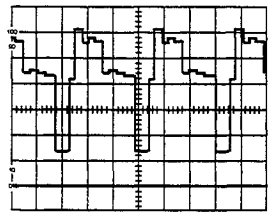

② **D540 Anode**
V : 0.5V/div, H : 20μsec/div

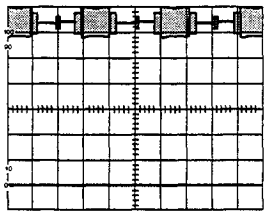

⑤ **D519 Cathode**
V : 1V/div, H : 20μsec/div

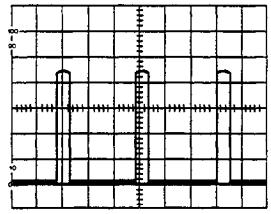

⑧ **D524 Cathode**
V : 1V/div, H : 20μsec/div

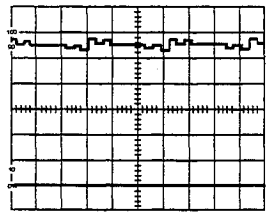

⑪ **Q531 Collector**
V : 1V/div, H : 20μsec/div

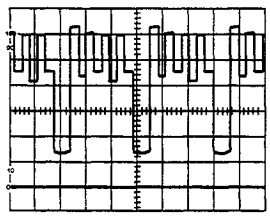

③ **IC501-pin 61**
V : 0.5V/div, H : 20μsec/div

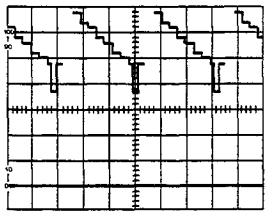

⑥ **D509 Cathode**
V : 1V/div, H : 20μsec/div

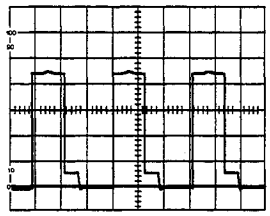

⑨ **Q533 Collector**
V : 1V/div, H : 20μsec/div

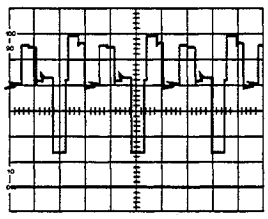

⑫ **Q509 Base**
V : 1V/div, H : 20μsec/div

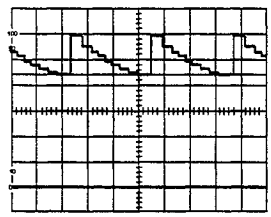

B 2/3 AV I/O ASSY (2/3)

- AV I/O, Y/C SEP, S INPUT AND SUB WOOFER BLOCKS

① **MONITOR OUT VIDEO**
V : 0.5V/div, H : 10msec/div

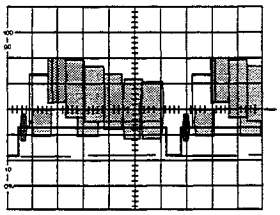

③ **F3201- VIDEO IN**
V : 1V/div, H : 10msec/div

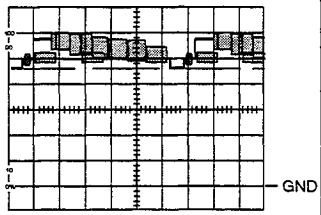

⑤ **F3201- C OUT**
V : 1V/div, H : 10msec/div

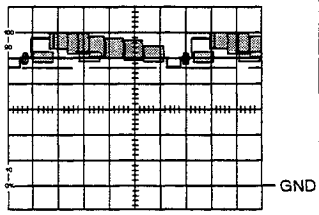

② **MONITOR OUT L ch**
V : 0.5V/div, H : 10msec/div

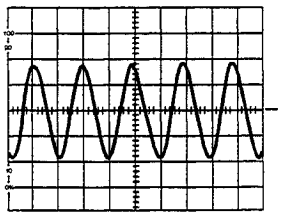

④ **F3201- Y OUT**
V : 1V/div, H : 10msec/div

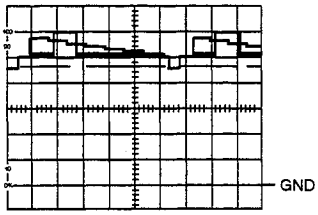

IC3201 (MC14066BF)

Pin No.	Voltage (V)	Pin No.	Voltage (V)
1	4.3	8	8.4
2	4.3	9	8.4
3	4.3	10	8.4
4	5.4	11	8.4
5	0	12	12.2
6	0	13	12.2
7	0	14	12.2

IC1602 (BA7644AN)

Pin No.	Voltage (V)
1	7.5
2	0.2
3	0.2
4	7.5
5	0
6	7.5
7	12.2
8	7.5
9	0
10	6.1

IC1603 (BA7644AN)

Pin No.	Voltage (V)
1	7.5
2	0
3	0
4	7.5
5	0
6	7.5
7	12.2
8	7.5
9	0
10	6.1

IC1601 (TC4052BF)

Pin No.	Voltage (V)	Pin No.	Voltage (V)
1	6.8	9	0.2
2	7.2	10	0.2
3	6.8	11	7.2
4	7.1	12	6.9
5	7.2	13	6.9
6	0	14	7.2
7	0	15	7.2
8	0	16	12.2

B 3/3 AV I/O ASSY (3/3)

• P IN P, V-CHIP AND CNR BLOCKS

① IC3003-pin 1
V : 0.5V/div, H : 10msec/div

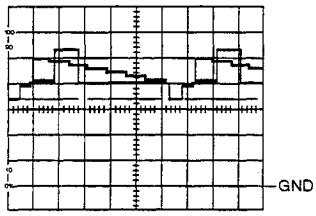

④ IC3002-pin 6
V : 0.5V/div, H : 10msec/div

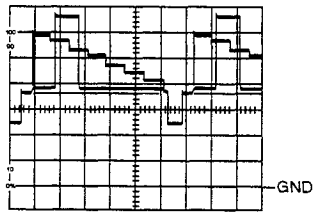

⑦ IC3003-pin 28
V : 0.5V/div, H : 10msec/div

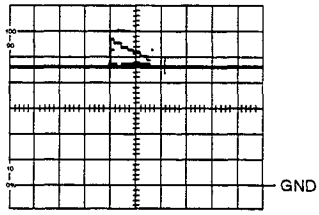

⑩ IC3003-pin 15
V : 0.5V/div, H : 10msec/div

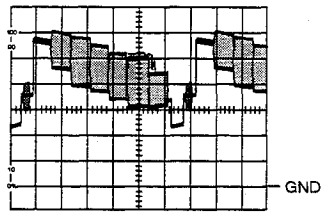

② IC3003-pin 3
V : 0.5V/div, H : 10msec/div

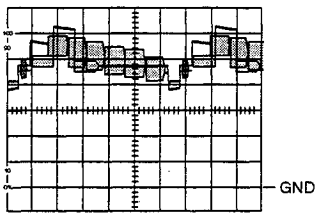

⑤ IC3002-pin 8
V : 0.5V/div, H : 10msec/div

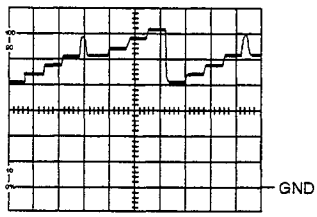

⑧ IC3003-pin 25
V : 0.5V/div, H : 10msec/div

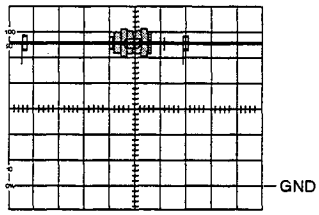

⑪ Upper : Q3011 Emitter
⑫ Lower : IC3301-pin 10
V : 1V/div, H : 10msec/div

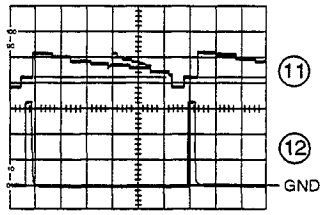

③ IC3003-pin 56
V : 0.5V/div, H : 10msec/div

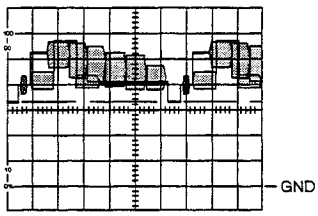

⑥ IC3002-pin 10
V : 0.5V/div, H : 10msec/div

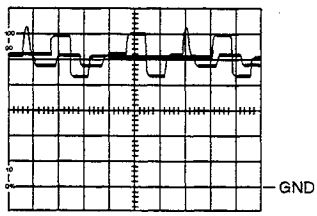

⑨ IC3003-pin 17
V : 0.5V/div, H : 10msec/div

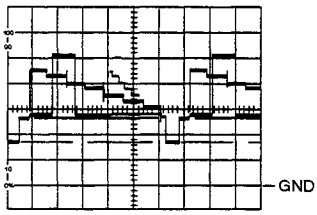

⑬ A3-pin 3 (C OUT)
V : 2V/div, H : 10msec/div

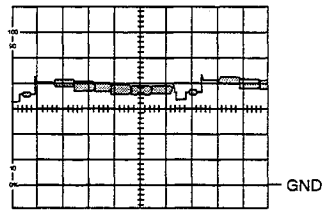

IC3002 (HD49420FS)

Pin No.	Voltage (V)	Pin No.	Voltage (V)	Pin No.	Voltage (V)	Pin No.	Voltage (V)	Pin No.	Voltage (V)	Pin No.	Voltage (V)	Pin No.	Voltage (V)	Pin No.	Voltage (V)
1	0	11	1.8	21	2.5	31	2.3	41	–	51	–	61	–	71	4.1
2	1.5	12	0	22	2.5	32	5.1	42	–	52	–	62	–	72	0.1
3	5.1	13	5.1	23	5.1	33	–	43	–	53	–	63	–	73	–
4	1.5	14	5.1	24	4.6	34	5.1	44	–	54	–	64	–	74	4.1
5	3.4	15	5.1	25	2.5	35	5	45	–	55	–	65	–	75	2.4(*3) 2 (*4)
6	2.3	16	2.5	26	3.7	36	5	46	–	56	–	66	–	76	0
7	4.2 (*1) 0 (*2)	17	2.6	27	3.6	37	4.7	47	–	57	–	67	–	77	2.5
8	2.6	18	5.1	28	0	38	–	48	5	58	–	68	–	78	2.4
9	5.2	19	3.7	29	2.5	39	–	49	–	59	–	69	–	79	0
10	2.6	20	3.6	30	0	40	–	50	–	60	–	70	–	80	2.1

Note ; (*1) : Main picture display ON, (*2) : Main picture display OFF
(*3) : Sub picture display ON, (*4) : Sub picture display OFF

IC3003 (HA11579)

Pin No.	Voltage (V)	Pin No.	Voltage (V)	Pin No.	Voltage (V)	Pin No.	Voltage (V)	Pin No.	Voltage (V)	Pin No.	Voltage (V)	Pin No.	Voltage (V)
1	2.1	9	3.6	17	1.7	25	2.7	33	1.7	41	0.5(*1) 1.9(*2)	49	1.6
2	0	10	3.5	18	3	26	0	34	2.5	42	–	50	0
3	2.5	11	2.6	19	–	27	2.3	35	3	43	–	51	4.9
4	0	12	3.8	20	5.1	28	2.3	36	4.2	44	4.3	52	1.6
5	5.2	13	2.6	21	0	29	2.5	37	2.3	45	0	53	–
6	0	14	2.8	22	2.8	30	2.5	38	2.4	46	0	54	4.4
7	1.9	15	2.2	23	2	31	3.2	39	–	47	0	55	–
8	1.9	16	1.6	24	5.1	32	3.2	40	0.5(*1) 1.9(*2)	48	–	56	2.3

Note ; (*1) : Main picture display ON
(*2) : Main picture display OFF

IC3301 (MC14011BF)

Pin No.	Voltage (V)
1	4
2	1
3	4
4	4
5	1
6	1
7	0
8	4.7
9	4.7
10	0.1
11	0.4
12	4.4
13	4.4
14	4.8

IC3006 (TC4538BF)

Pin No.	Voltage (V)
1	0
2	5
3	5.1
4	0
5	5
6	0
7	5
8	0
9	5
10	0
11	5
12	0
13	5.1
14	5
15	0
16	5.1

C 1/3 AMP ASSY (1/3)

• CONVER AMP AND V. DEFLECTION BLOCKS

- Input signal :Color bar
- Picture quality : STANDARD
- Range : DC range (Unless otherwise noted)

① **G6 pin 6 (SVR)**
V : 0.5V/div, H : 2msec/div

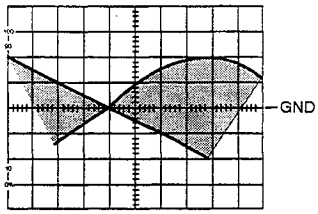

③ **G5 pin 6 (SVR)**
V : 0.5V/div, H : 2msec/div

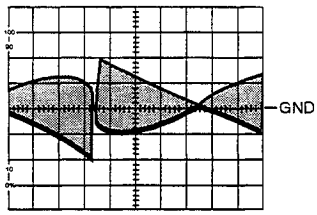

⑤ **G4 pin 6 (SVR)**
V : 0.5V/div, H : 2msec/div

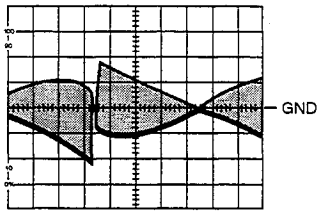

⑦ **G4 pin 2 (VR)**
V : 0.5V/div, H : 5msec/div

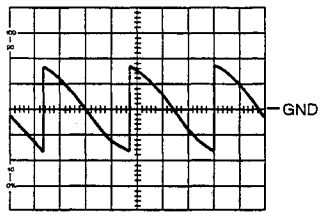

② **G6 pin 4 (SHR)**
V : 0.5V/div, H : 20μsec/div

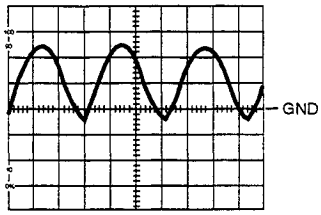

④ **G5 pin 4 (SHR)**
V : 0.2V/div, H : 20μsec/div

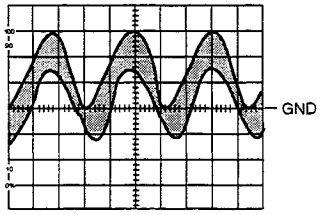

⑥ **G4 pin 4 (SHR)**
V : 0.2V/div, H : 20μsec/div

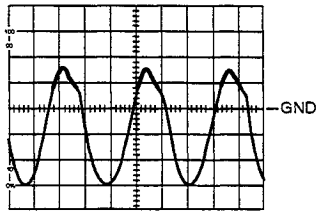

D CONVER CONTROL ASSY

IC2301 (PM0011AS)

Pin No.	Voltage (V)	Pin No.	Voltage (V)	Pin No.	Voltage (V)
1	0	15	0	29	0.1
2	-1	16	-0.8	30	0.1
3	0	17	0	31	5
4	-1	18	-1	32	4
5	0	19	0	33	5
6	-0.4	20	-0.5	34	5
7	0	21	5	35	0
8	5	22	-0.5	36	0
9	-4.8	23	0	37	0
10	5	24	0.1	38	0.1
11	5	25	-0.1	39	0.1
12	4	26	0.1	40	0.1
13	5	27	0.1	41	0.1
14	-2	28	0.1	42	0.1

IC2302 (PM0011AS)

Pin No.	Voltage (V)	Pin No.	Voltage (V)	Pin No.	Voltage (V)
1	0	15	0	29	0.1
2	-1	16	-0.8	30	0.1
3	0	17	0	31	5
4	-1	18	-1	32	4
5	0	19	0	33	5
6	-0.4	20	-0.5	34	5
7	0	21	5	35	0
8	5	22	0	36	0
9	-4.8	23	0	37	0
10	5	24	0.1	38	0
11	5	25	-0.2	39	0
12	4	26	0.1	40	0
13	5	27	0.1	41	-0.4
14	-2	28	0.1	42	0

IC2303 (PM0011AS)

Pin No.	Voltage (V)	Pin No.	Voltage (V)	Pin No.	Voltage (V)
1	0	15	0	29	0.1
2	-1	16	-0.8	30	-0.1
3	0	17	0	31	5
4	-1	18	-1	32	4
5	0	19	0	33	5
6	-0.4	20	-0.5	34	5
7	0	21	5	35	0
8	5	22	-0.5	36	0
9	-4.8	23	-0.4	37	0
10	5	24	0.2	38	0
11	5	25	-0.2	39	0
12	4	26	0.1	40	0.1
13	5	27	0.1	41	0.6
14	-2	28	0.1	42	0

IC2307 (PA0053B)

Pin No.	Voltage (V)	Pin No.	Voltage (V)	Pin No.	Voltage (V)
1	0.4	7	-1	13	0.3
2	1.1	8	0	14	1.2
3	5	9	-4.9	15	0
4	0	10	0.2	16	-2.1
5	-1	11	0.5	17	1.2
6	0	12	-1	18	-1.5

IC2308 (PA0053B)

Pin No.	Voltage (V)	Pin No.	Voltage (V)	Pin No.	Voltage (V)
1	0.2	7	-1.1	13	0.4
2	1.2	8	0	14	1.2
3	5	9	-4.9	15	0
4	0	10	0.2	16	-0.6
5	-0.8	11	0.5	17	1.2
6	0	12	-0.8	18	-1.5

- Input signal : Color bar
- Picture quality : STANDARD
- Range : DC range (Unless otherwise noted)

① **D2301 Anode**
V : 2V/div, H : 20μsec/div

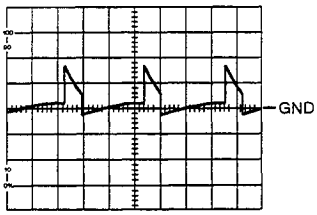

② **Between R2314 and R2315**
V : 2V/div, H : 5msec/div

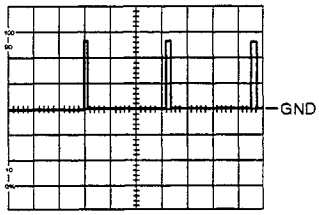

③ **Q2304 Base**
V : 0.5V/div, H : 20μsec/div

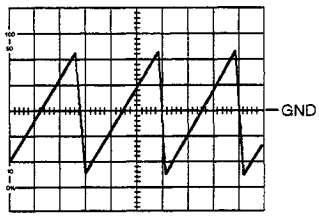

④ **Q2302 Base**
V : 1V/div, H : 20μsec/div

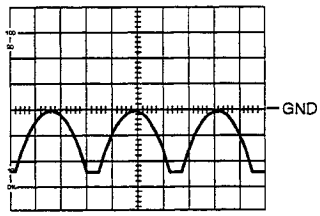

⑤ **IC2307-pin 6**
V : 0.5V/div, H : 20μsec/div

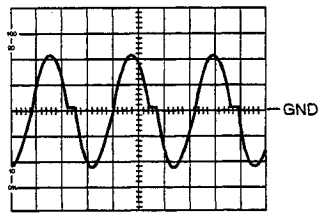

⑥ **IC2307-pin 7**
V : 1V/div, H : 20μsec/div

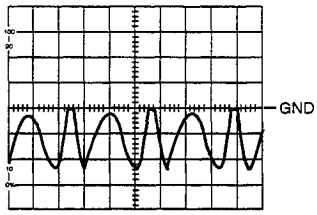

⑦ **Q2306 Base**
V : 0.5V/div, H : 5msec/div

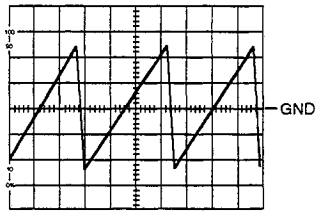

⑧ **Q2308 Base**
V : 1V/div, H : 5msec/div

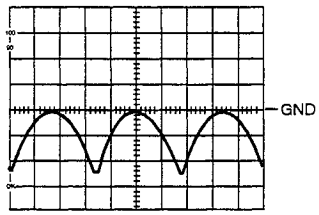

⑨ **IC2308-pin 6**
V : 0.5V/div, H : 5msec/div

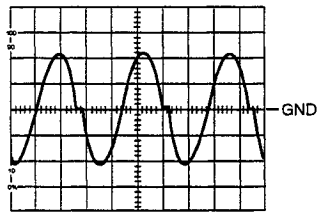

⑩ **IC2308-pin 7**
V : 1V/div, H : 5msec/div

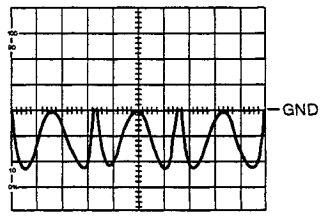

⑪ **C2371 ⊖ side**
V : 0.5V/div, H : 2msec/div

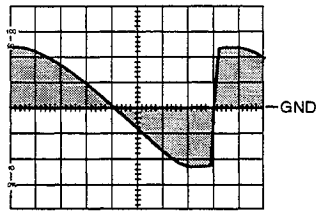

⑫ **C2363 ⊖ side**
V : 0.5V/div, H : 2msec/div

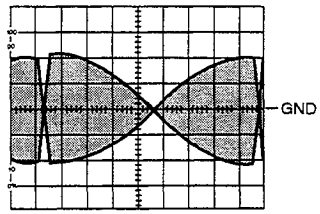

⑬ **C2370 ⊖ side**
V : 0.5V/div, H : 2msec/div

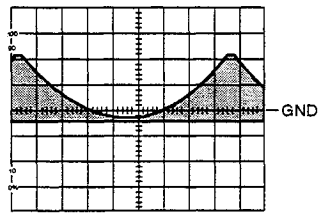

⑭ **IC2305-pin 1**
V : 1V/div, H : 2msec/div

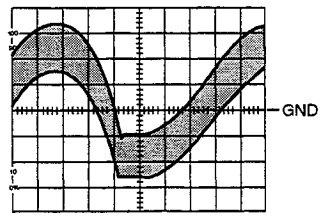

⑮ **IC2304-pin 1**
V : 0.5V/div, H : 5msec/div

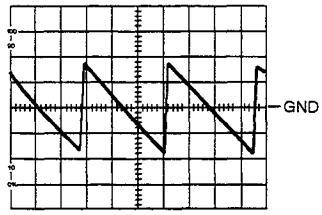

⑯ **IC2304-pin 7**
V : 0.5V/div, H : 5msec/div

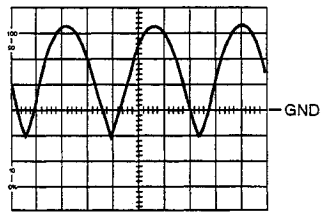

⑰ **IC2306-pin 7**
V : 0.5V/div, H : 20μsec/div

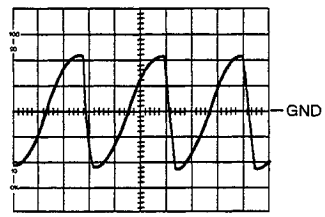

⑱ **IC2306-pin 1**
V : 0.5V/div, H : 5msec/div

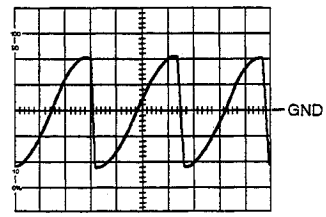

I 1/2 POWER SUPPLY SERVICE ASSY (1/2)

• POWER SUPPLY BLOCK

① **D101-pin 1**
V : 20V/div, H : 2nsec/div

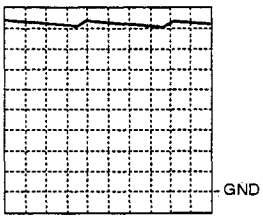

⑤ **IC101-pin 1**
V : 1V/div, H : 5μsec/div

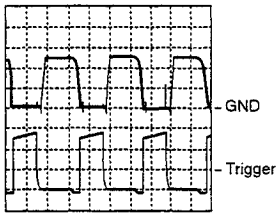

⑦ **IC101-pin 3**
V : 0.5V/div, H : 5μsec/div

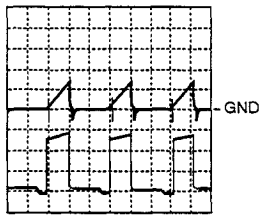

⑩ **D112 Anode**
V : 10V/div, H : 5μsec/div

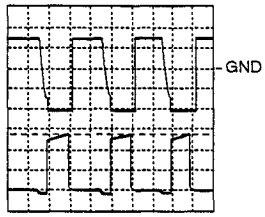

② **Upper : Q113 Drain**
V : 100V/div, H : 5μsec/div
③ **Lower : Q113 Gate**
V : 5V/div, H : 5μsec/div

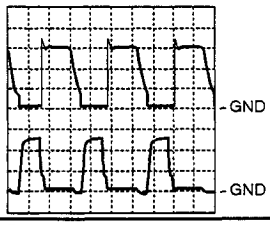

⑥ **IC101-pin 2**
V : 0.5V/div, H : 5μsec/div

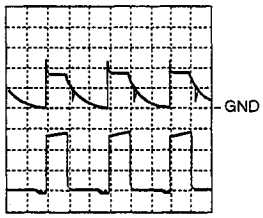

⑧ **IC101-pin 4**
V : 0.2V/div, H : 5μsec/div

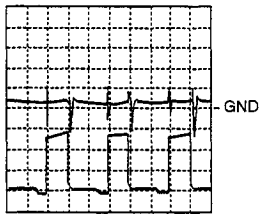

⑪ **D106 Cathode**
V : 2V/div, H : 5msec/div

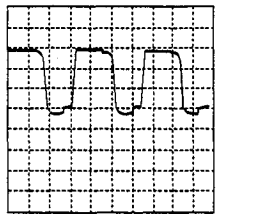

④ **Upper : Q113 Source**
V : 0.2V/div, H : 5μsec/div
⑨ **Lower : IC101-pin 6** (Trigger)
V : 5V/div, H : 5μsec/div

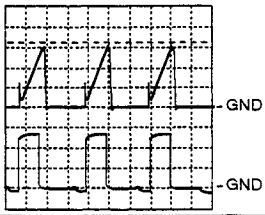

I 2/2 POWER SUPPLY SERVICE ASSY (2/2)

• DEFLECTION BLOCK

⑤ **Upper : Q218 Emitter**
V : 5V/div, H : 20μsec/div
① **Lower : Q211 Base**
V : 0.5V/div, H : 20μsec/div

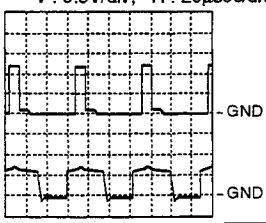

③ **Q214 Base**
V : 5V/div, H : 20μsec/div

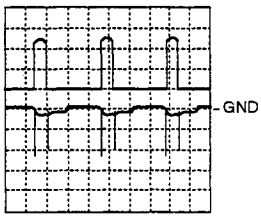

⑥ **Upper : V. BLK (Trigger)**
Lower : Q213 Collector
V : 10V/div, H : 5msec/div

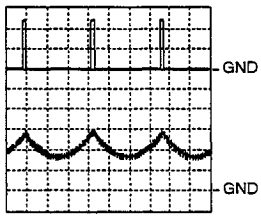

⑦-2/2 **Q216 Collector**
V : 200V/div, H : 20μsec/div

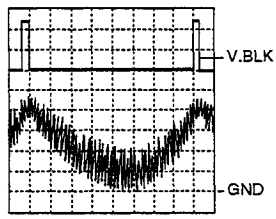

② **Q211 Collector**
V : 20V/div, H : 20μsec/div

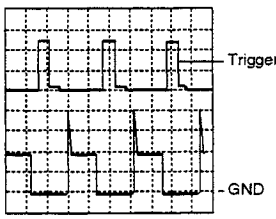

④ **Q214 Collector**
V : 200V/div, H : 20μsec/div

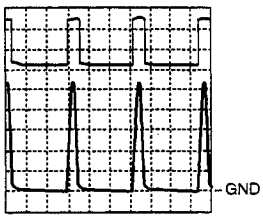

⑦-1/2 **Q216 Collector**
V : 200V/div, H : 20μsec/div

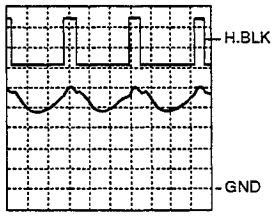

4. PCB CONNECTION DIAGRAM

NOTE FOR PCB DIAGRAMS :

1. Part numbers in PCB diagrams match those in the schematic diagrams.
2. A comparison between the main parts of PCB and schematic diagrams is shown below.

Symbol In PCB Diagrams	Symbol In Schematic Diagrams	Part Name
B C E	B C E B C E	Transistor
B C E	B C E B C E	Transistor with resistor
D G S	D G S D G S	Field effect transistor
		Resistor array
		3-terminal regulator

3. The parts mounted on this PCB include all necessary parts for several destinations.
   For further information for respective destinations, be sure to check with the schematic diagram.
4. View point of PCB diagrams.

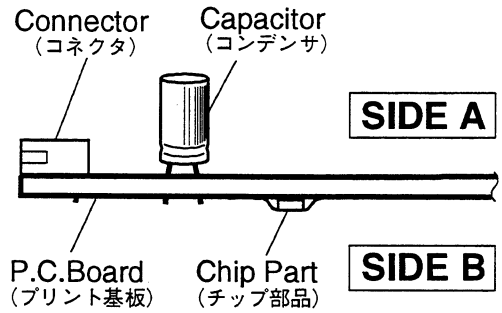

A-a

4.1 TUNER · VIDEO ASSY (GUIDE PAGE)

A TUNER • VIDEO ASSY

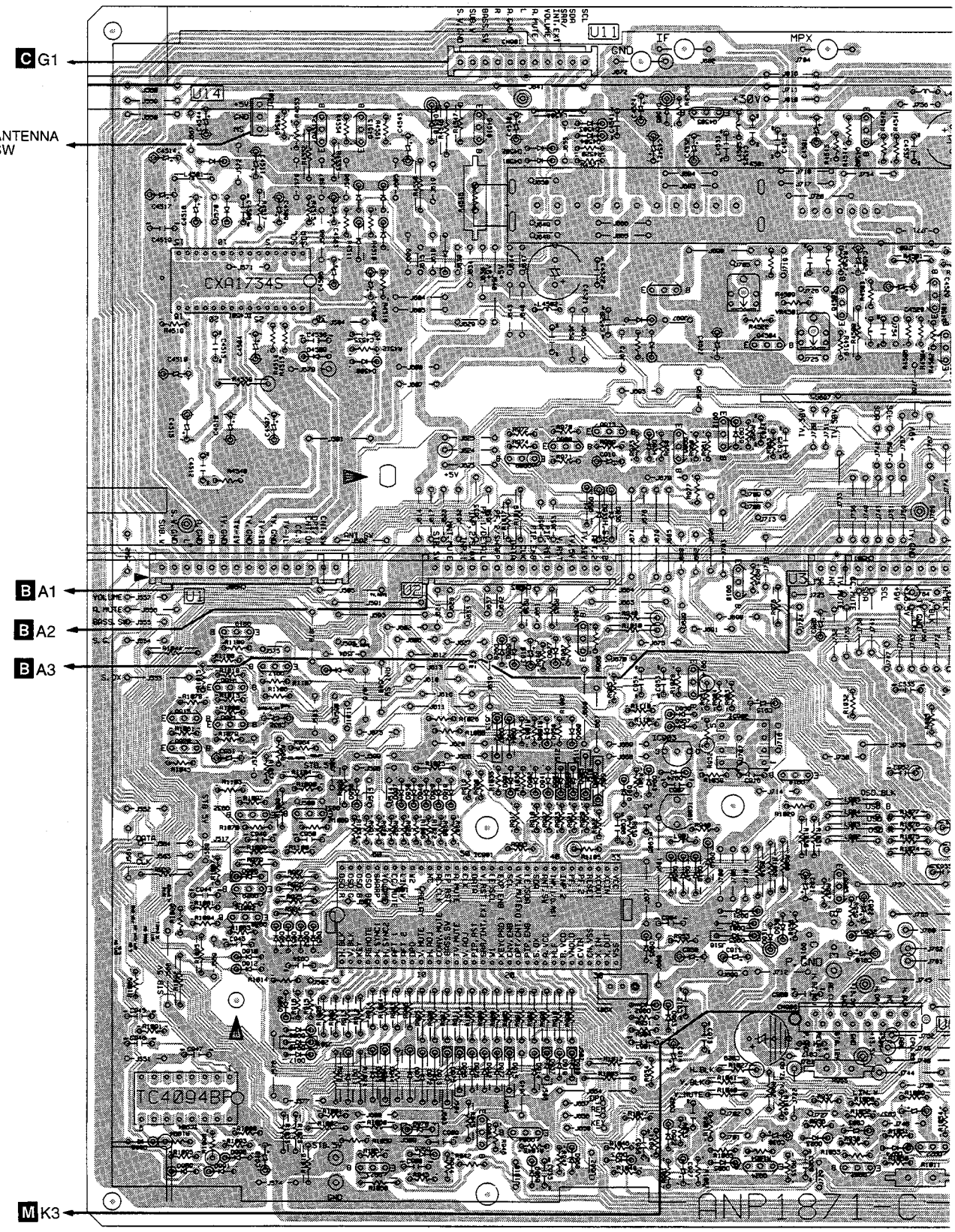

TC901 VR4501

IC4501 Q4512 Q4513 Q4510 Q909 Q908 Q913 Q906 Q4505 Q4504 Q4503 Q4509 Q45

Q915 – Q917 Q907 Q914 Q912 Q910

Q919–Q921 Q929–Q932 IC901 IC903 IC902 Q918 Q905

IC904 Q923 Q903 Q904 Q924 Q911 Q902 Q922

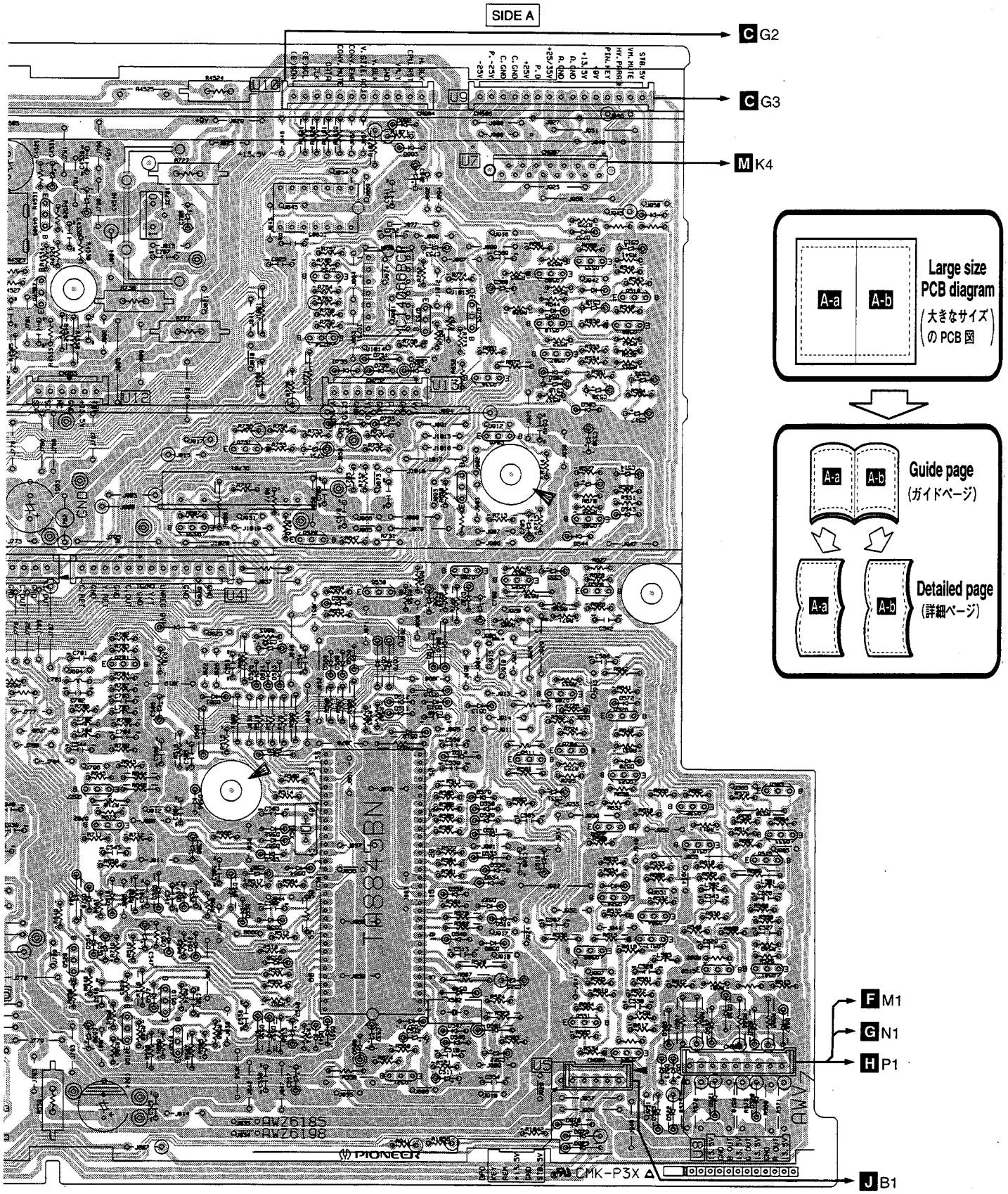

01 Q4502 Q4506 Q4507 IC701 IC905 Q752 IC751 Q753 Q755 Q507 — Q510
Q527 Q701 Q536 Q751 Q528 Q754 Q530 Q706 Q534 Q703 Q518 Q535 Q502 Q526 Q532 Q503
Q702 Q519 IC501 Q525 Q531 Q520 Q522—Q524 Q516 Q515 Q533
Q529 Q512 Q514 Q521 Q511 Q705 Q704 Q504—Q506 Q517 Q513 Q501

A-a A-b

A TUNER • VIDEO ASSY

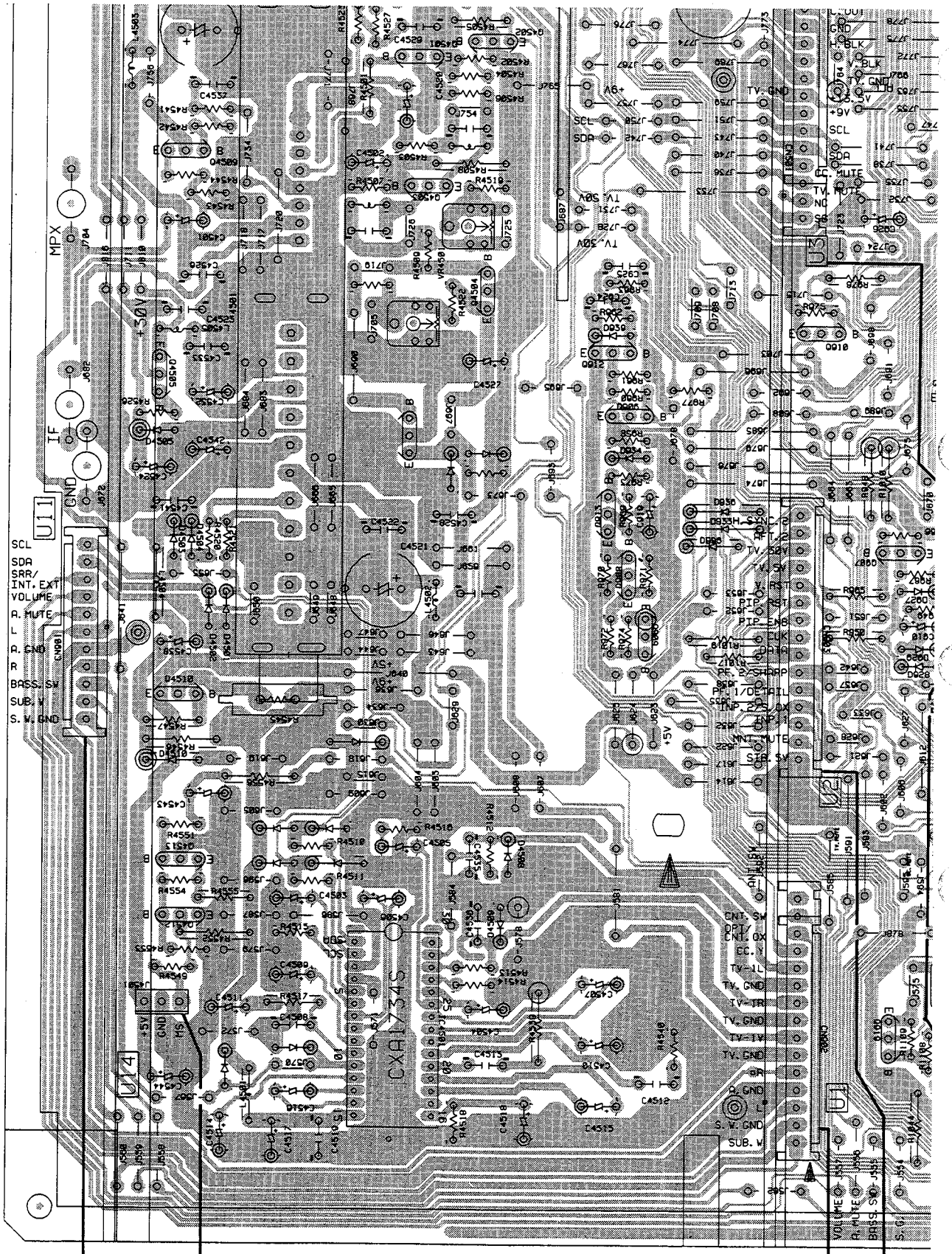

C G1

ANTENNA SW

B A1

B A2

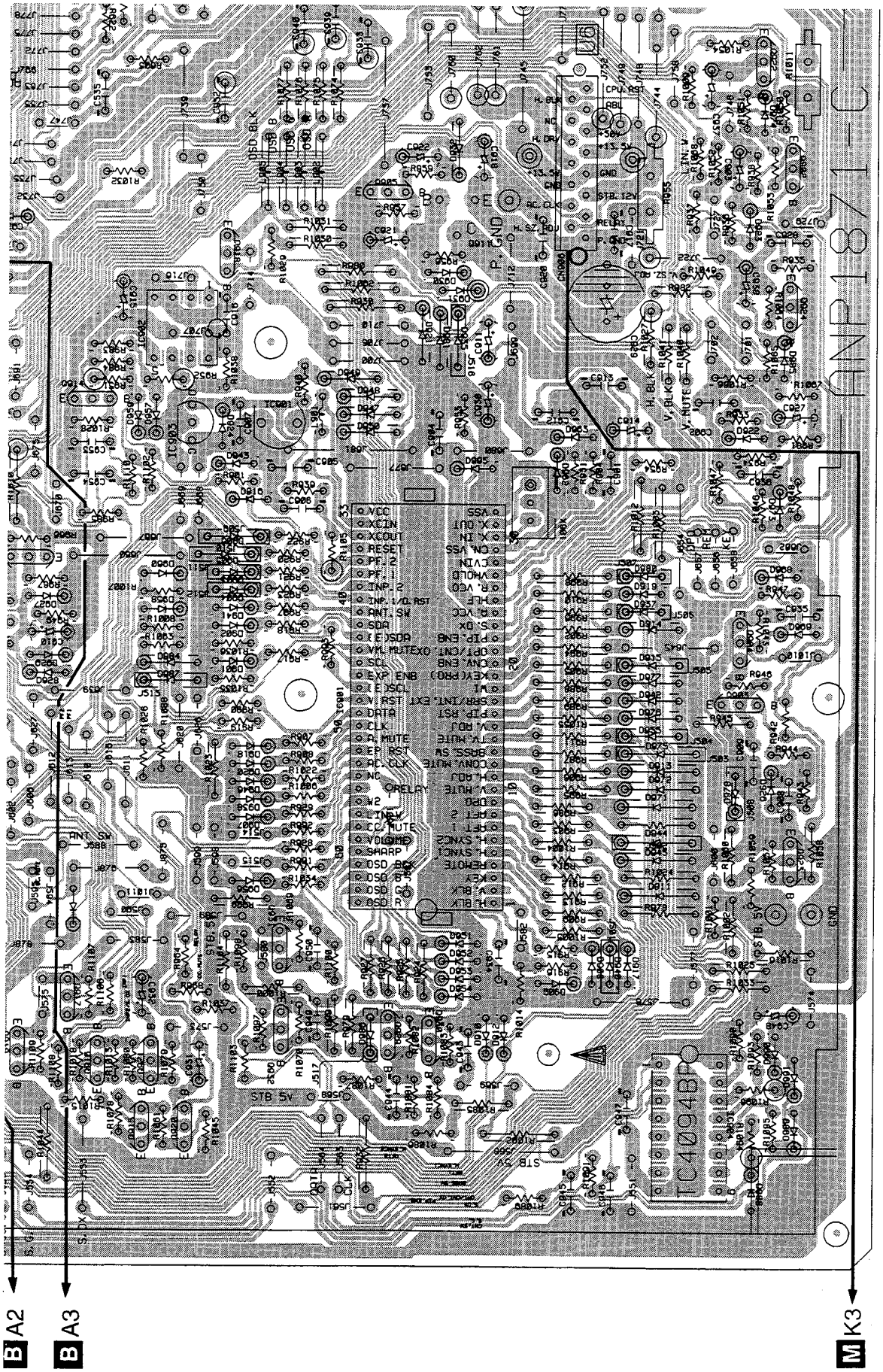

TC901 VR4501

Q906 Q4505 Q4504 Q4503 Q4509 Q4501

Q914 Q912 Q910

IC903 IC902 Q918 Q905

Q924 Q911 Q902 Q922

Q4510 Q909 Q908 Q913

Q907

IC901

Q903 Q904

IC4501 Q4512 Q4513

Q915 – Q917

Q919 – Q921 Q929 – Q932

IC904 Q923

A-a A-b

A-a A-b

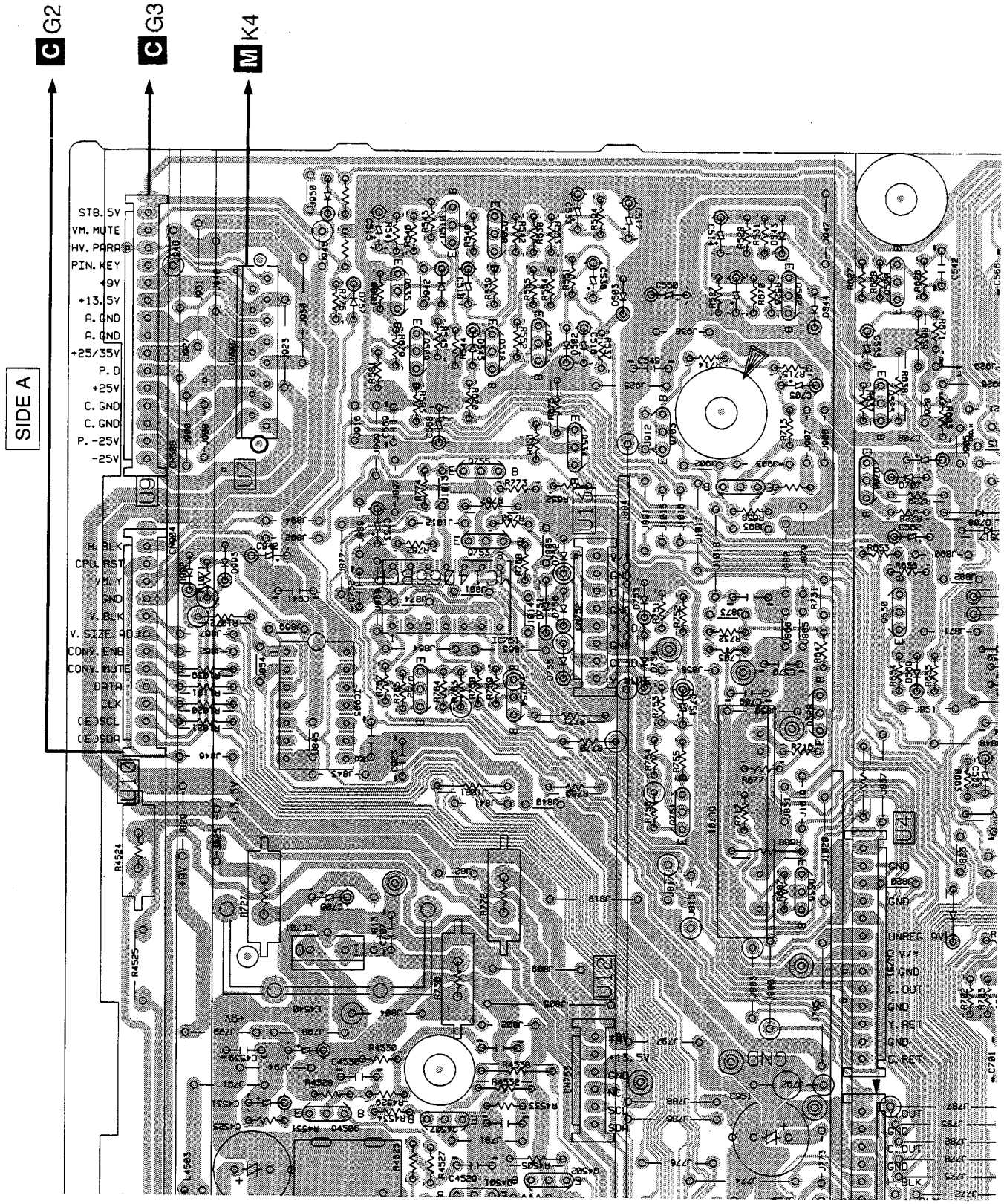
C G2
C G3
M K4
SIDE A
STB. 5V
VM. MUTE
HV. PARA
PIN. KEY
+9V
+13.5V
A. GND
A. GND
+25/35V
P. D
+25V
C. GND
C. GND
P. -25V
-25V
H. BLK
CPU. RST
V. Y
GND
V. BLK
V. SIZE. ADJ
CONV. ENB
CONV. MUTE
DATA
CLK
(E)SCL
(E)SDA
UNREG 9V
GND
Y/Y
GND
C. OUT
GND
Y. RET
GND
C. RET
GND
C. OUT
GND
BLK

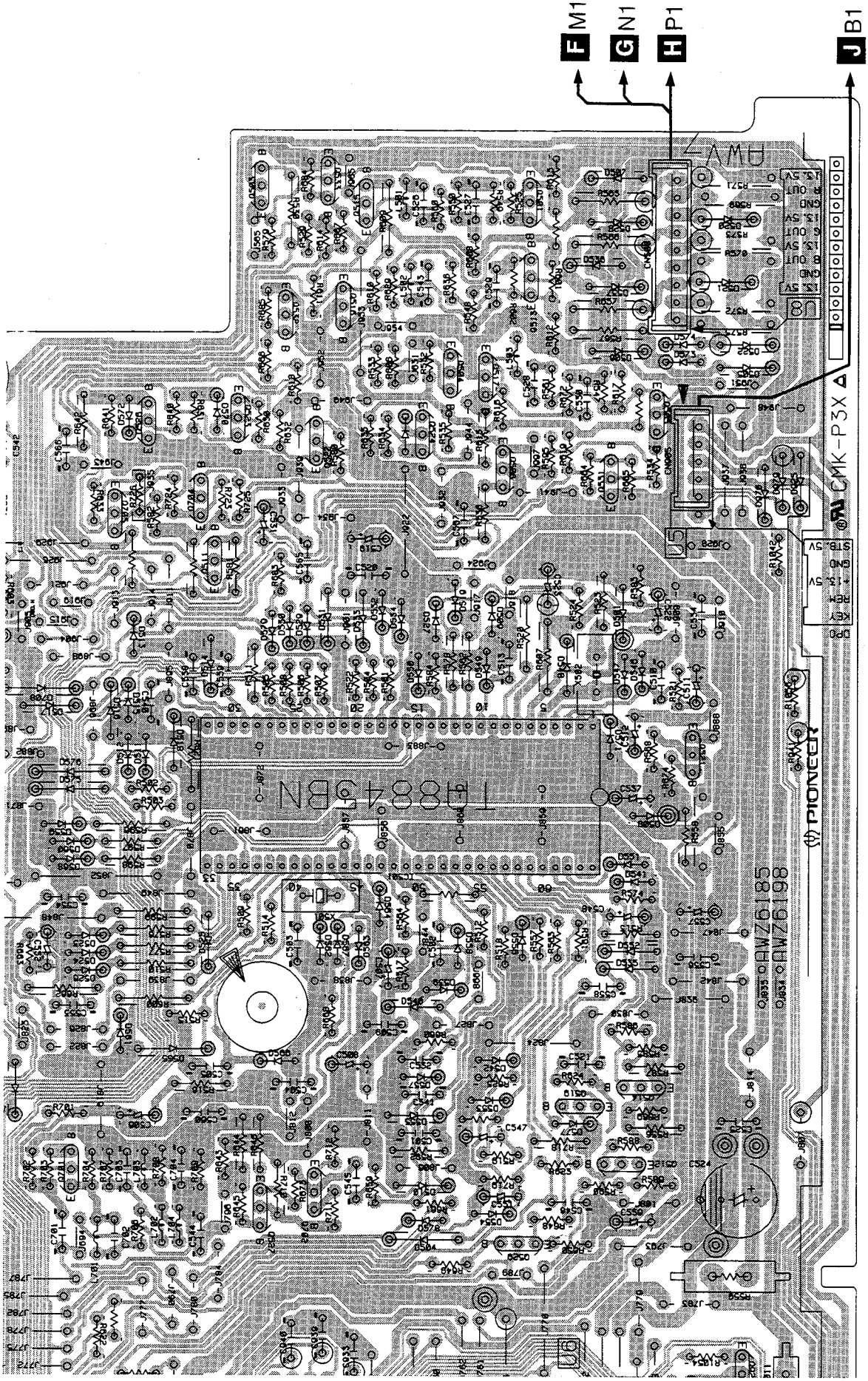

Q4501 Q4502 Q4506 Q4507 IC701 IC905 Q752 IC751 Q753 Q755 Q507 — Q510
Q527 Q701 Q536 Q751 Q528 Q754 Q530 Q706 Q534 Q703 Q518 Q535 Q502 Q526 Q532 Q503
Q702 Q519 IC501 Q525 Q531 Q520 Q522 – Q524 Q516 Q515 Q533
Q529 Q512 Q514 Q521 Q511 Q705 Q704 Q504 – Q506 Q517 Q513 Q501
922

A-a A-b

4.2 AV I/O ASSY

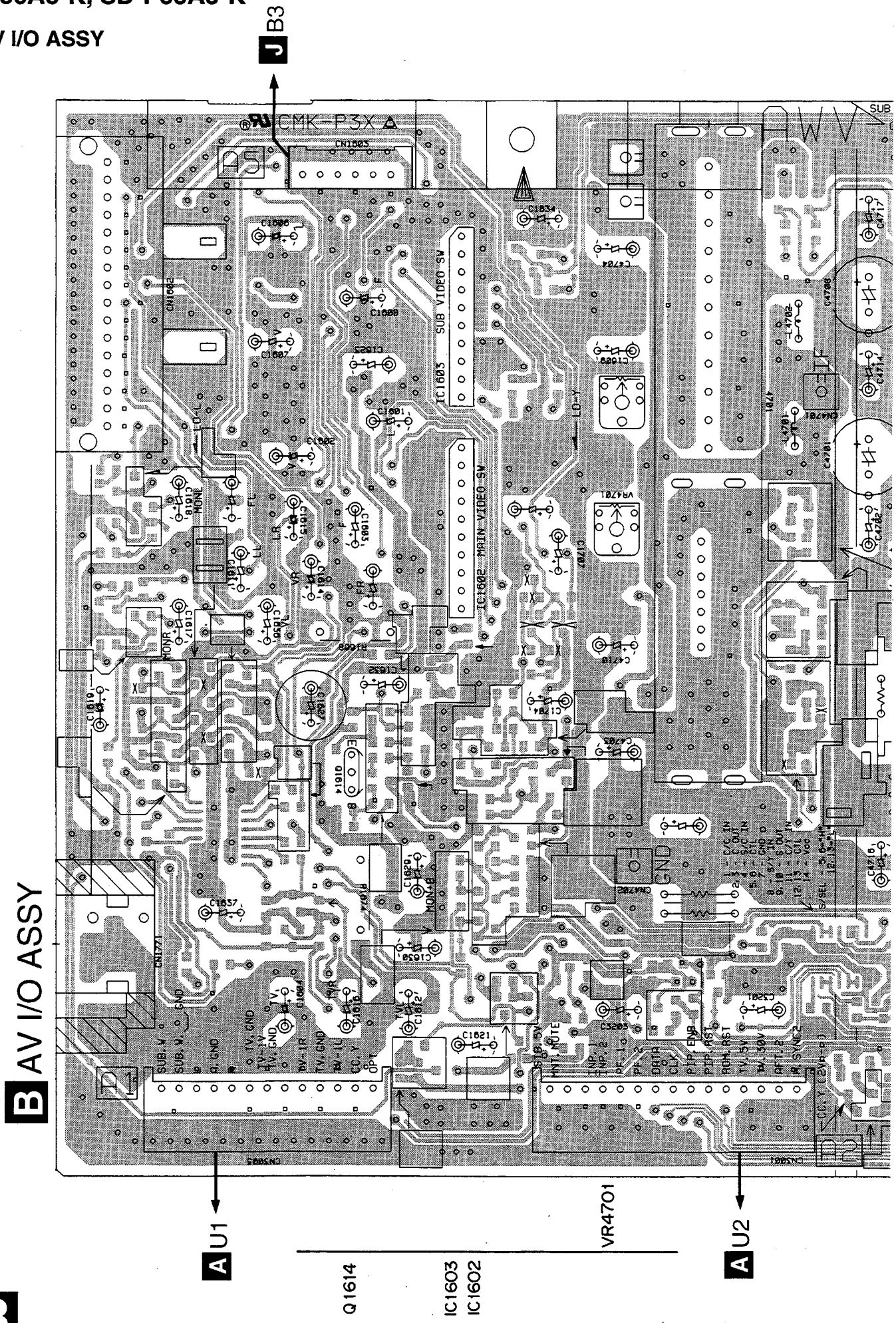
B AV I/O ASSY
J B3
A U1
A U2
Q1614
IC1603
IC1602
VR4701
CMK-P3X
SUB VIDEO SW
MAIN VIDEO SW
SUB
MONR
MONL
LD-L
LD-Y
GND

SIDE A

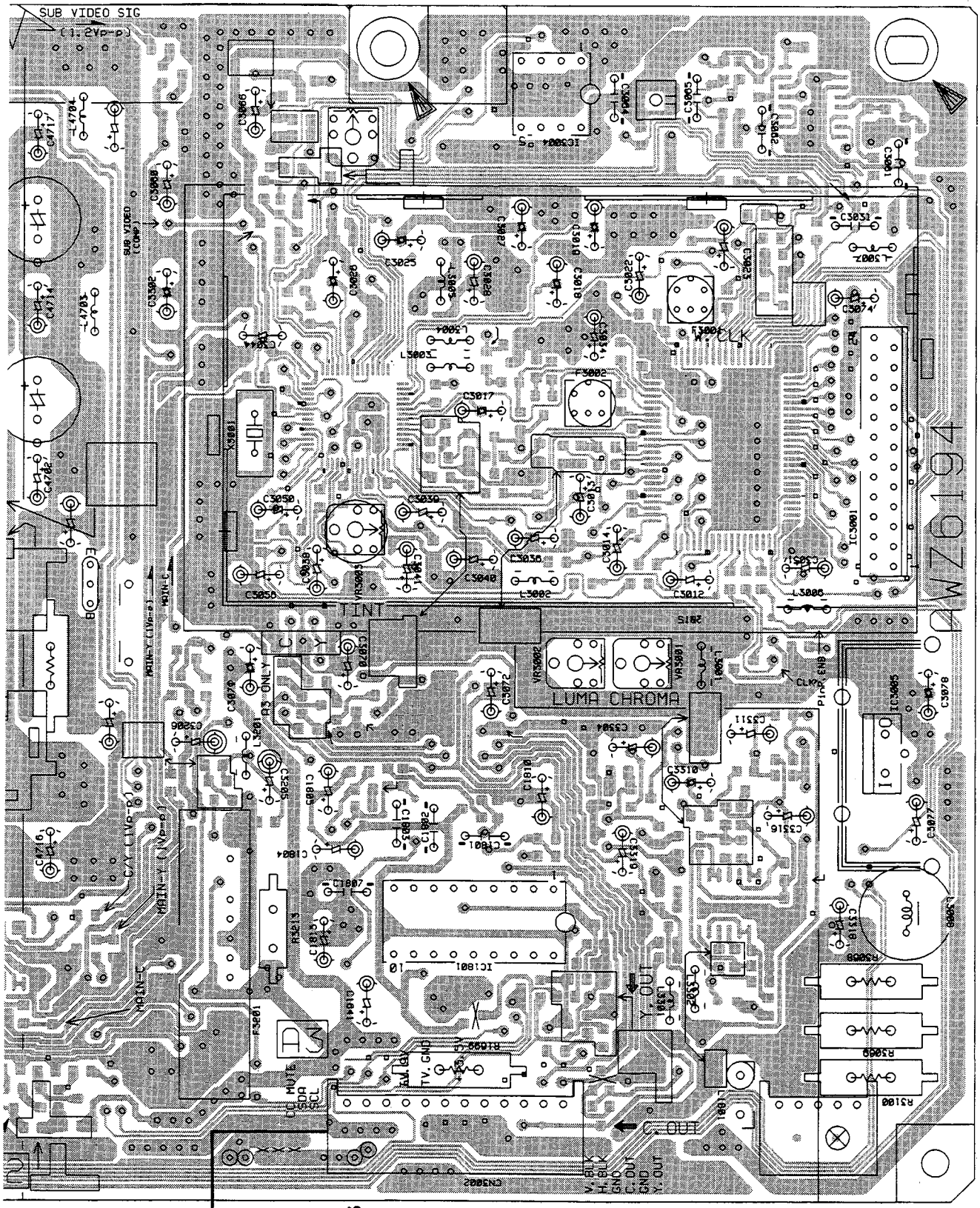

(ANP1873-B)

A U3

B

Q1603 – Q1606
IC1601
Q1610 Q1611
Q1602 Q1613 Q1616
Q1707 Q1706 Q1710
Q1601 Q1701 Q1617 – Q1704 Q1615
Q3214
Q4703 – Q4706
IC3201
Q3213
Q3212

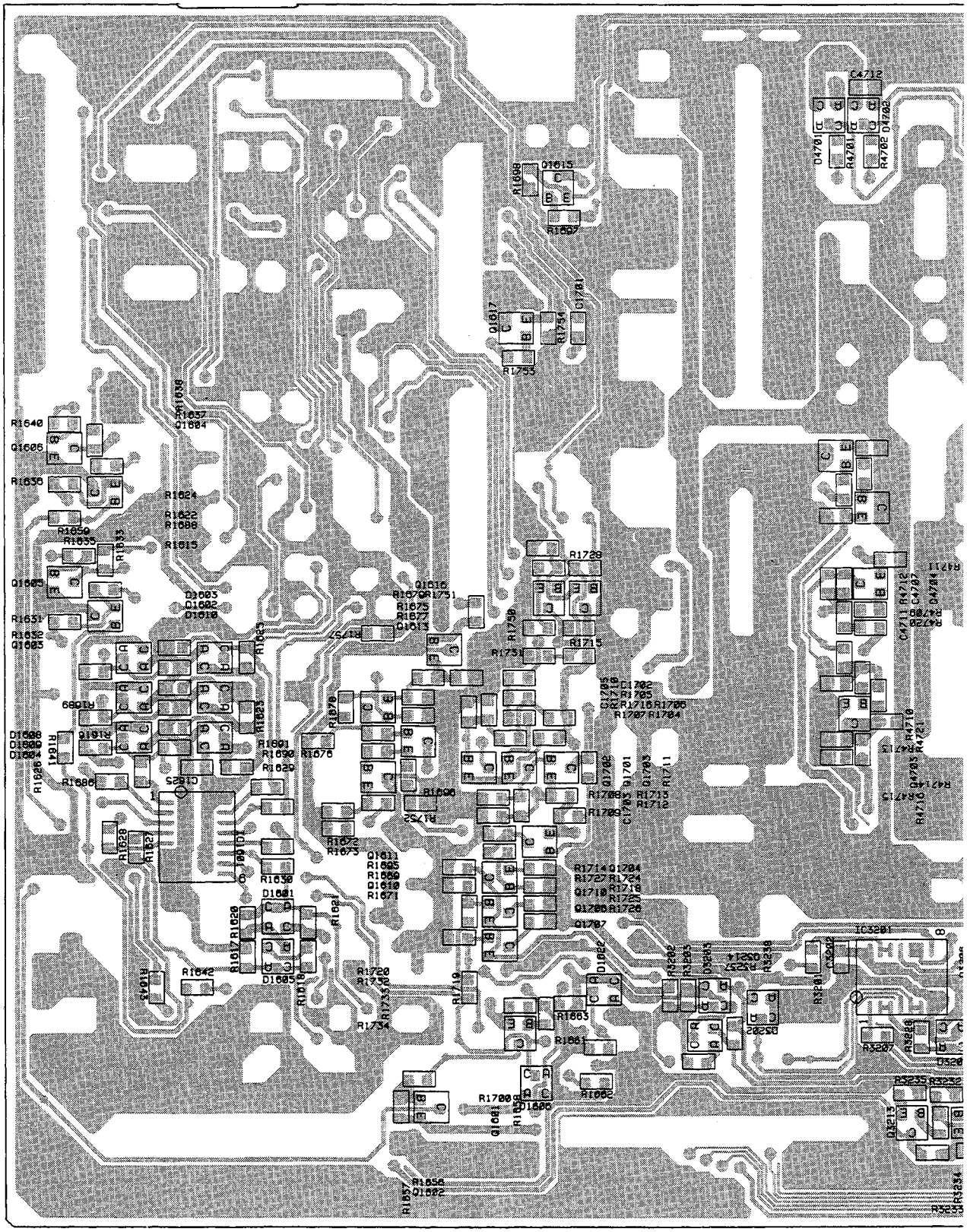

B AV I/O ASSY

SIDE A

Q3213
Q3212
Q3206
Q3013
Q3208 Q3210
Q3005
Q3006
Q3014
Q3301 IC3003
Q1801
Q1802
Q3001
–
Q3004
Q1804
Q1805
Q3302
Q3314
IC3301 Q3007
Q3310 IC3002
Q3010
IC3006
Q3008

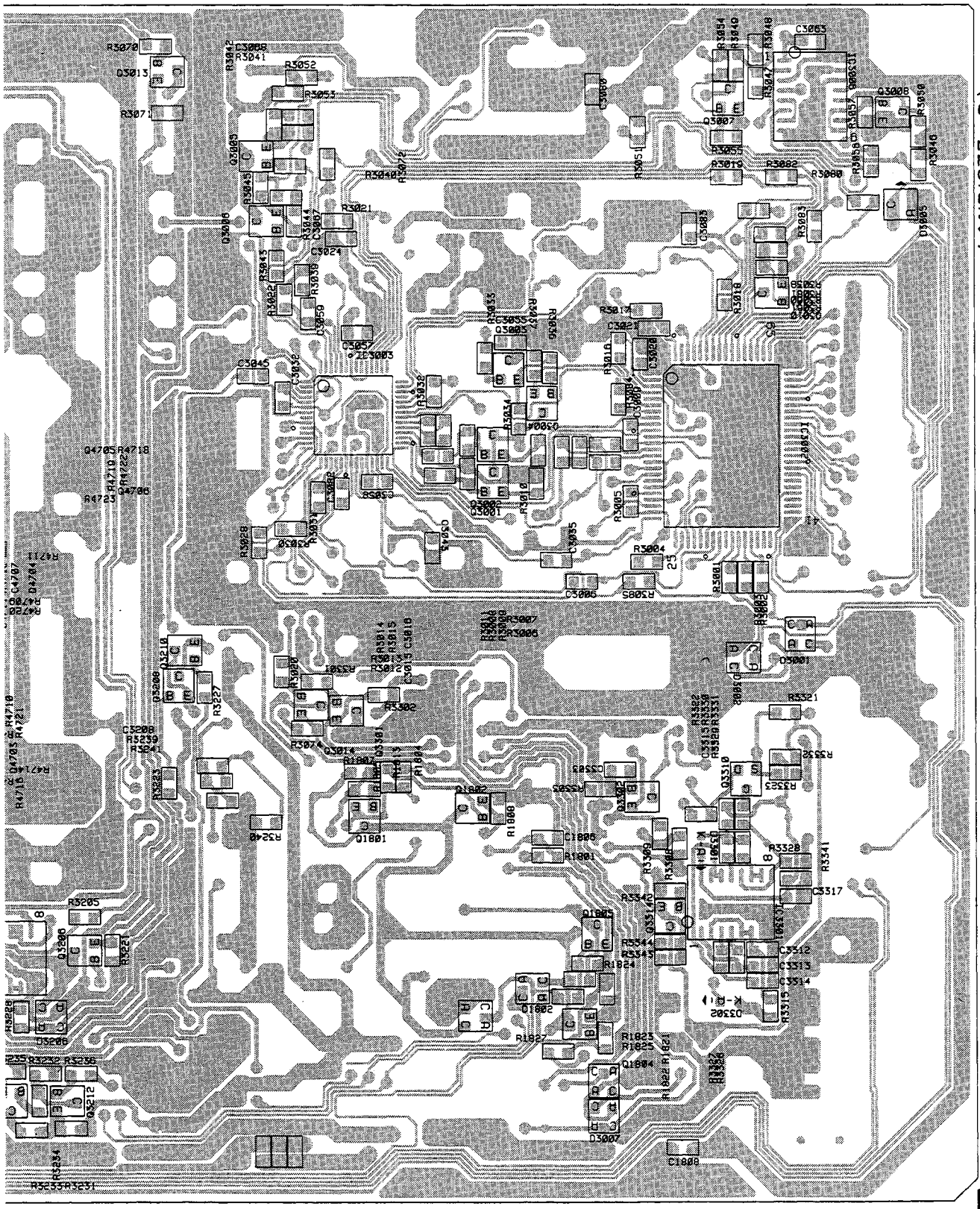

(ANP1873-B)

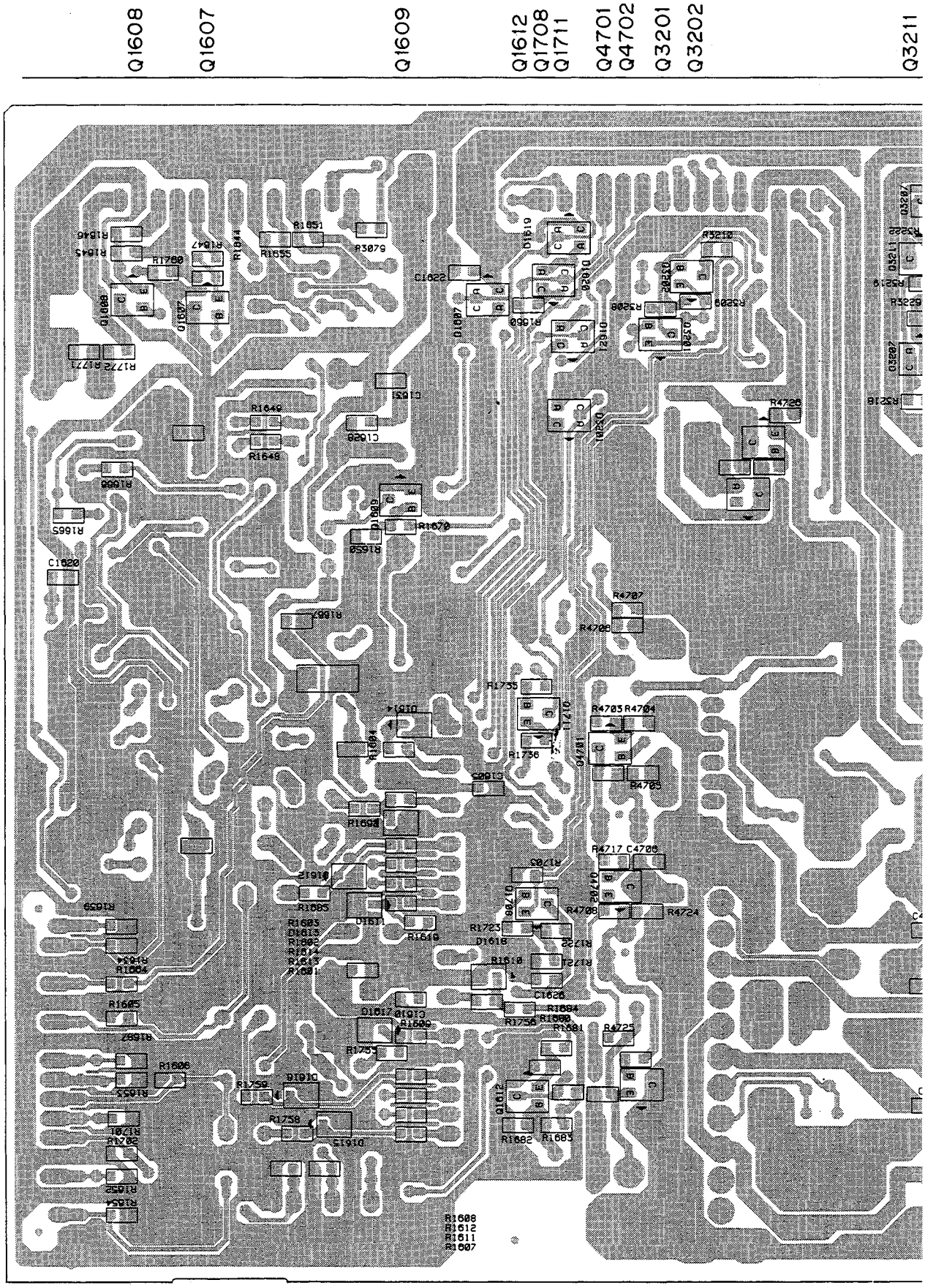
Q1608
Q1607
Q1609
Q1612
Q1708
Q1711
Q4701
Q4702
Q3201
Q3202
Q3211

B AV I/O ASSY

Q3211 Q3207 Q3205 Q3203 Q3209 Q3204 Q3011 Q3012 Q3303 – Q3305 Q3307 Q3009 Q3311 – Q3313

SIDE B

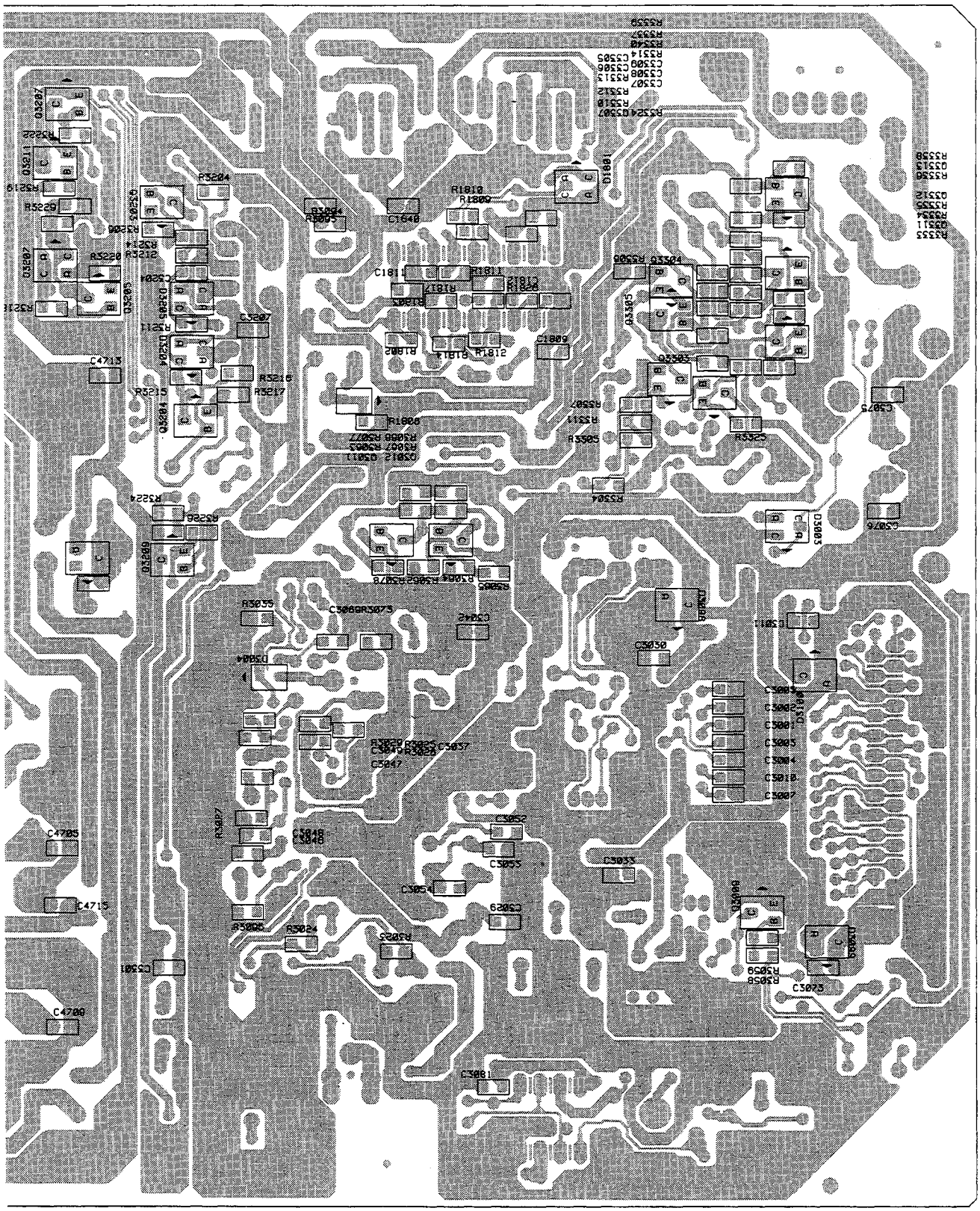

(ANP1873-B)

4.3 AMP ASSY
(GUIDE PAGE)

□ : HIGH VOLTAGE GENERATION POINT
(EXCEPTIG THE CHARGED SECTION)

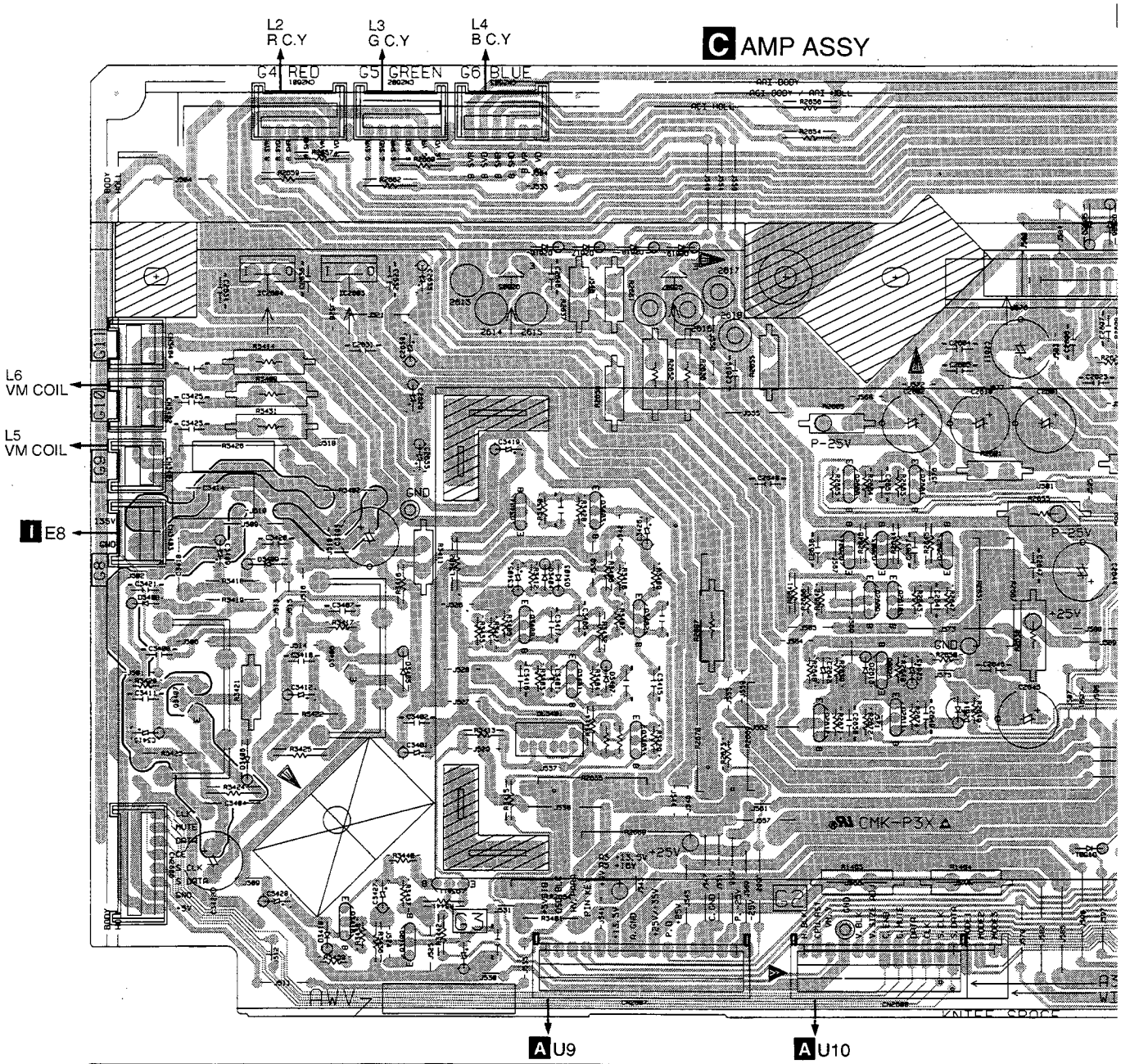

	IC2604	IC2604	Q2605		Q2607	Q2606
Q3407		Q3406	Q3404	Q3403	Q3402	Q2601 — Q2604
		Q3410 Q3409 Q3411	Q3408	Q3401	Q3405	Q2608 — Q2612

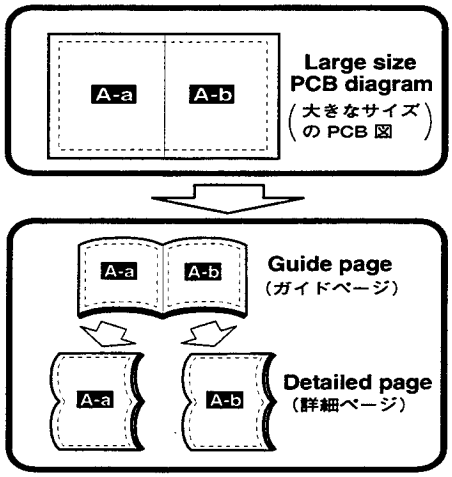
A-a
A-b
Large size PCB diagram
(大きなサイズの PCB 図)
A-a
A-b
Guide page
(ガイドページ)
A-a
A-b
Detailed page
(詳細ページ)

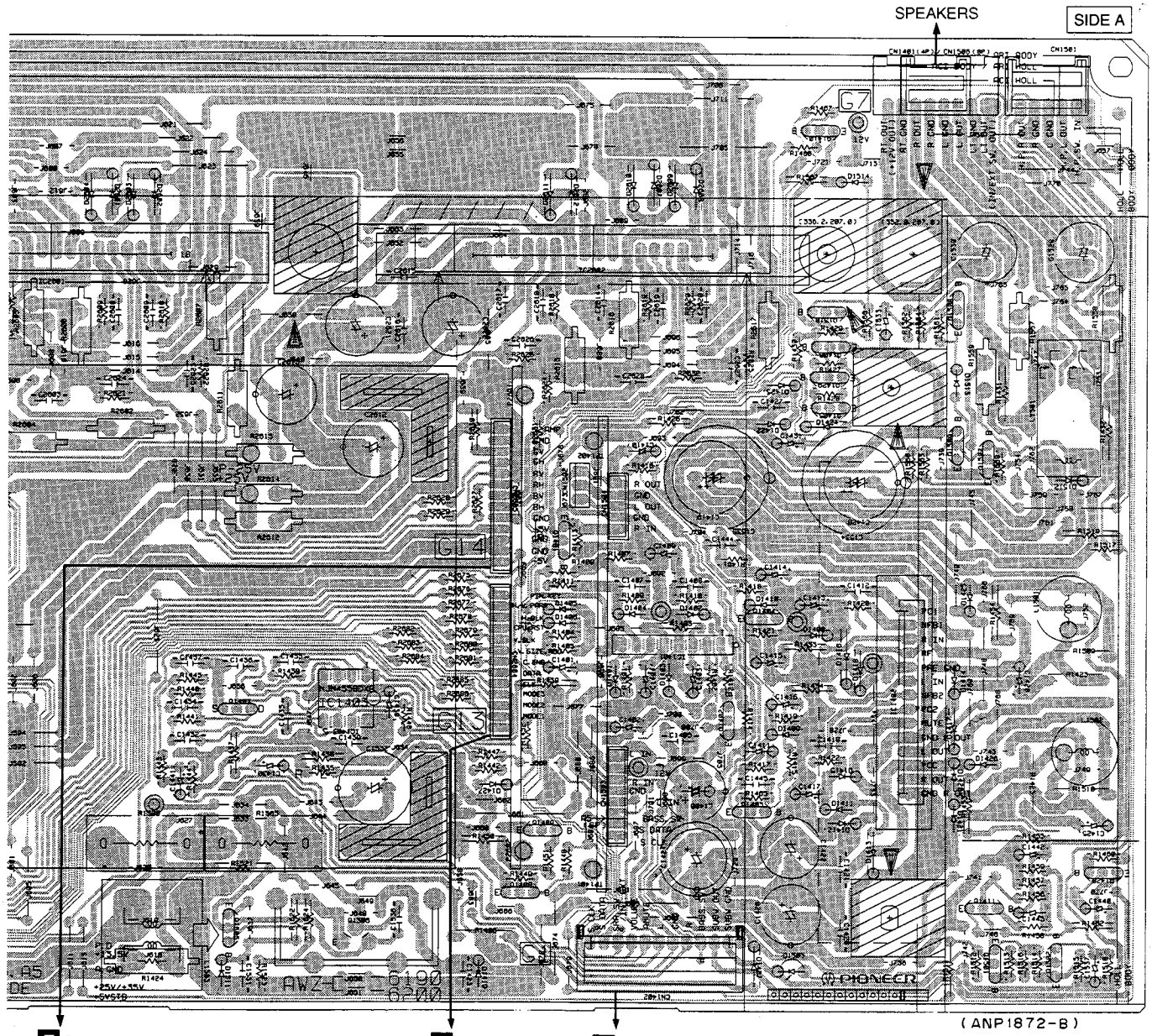
SPEAKERS
SIDE A
(ANP1872-B)
E C4
E C3
A U11
IC2601
IC2602
Q1410
Q1507-Q1509
Q1407
Q1505
IC1403
Q1506
Q1401
Q1408 Q1409
IC1401
Q1402-Q1404 Q1510
Q1406 Q1429 Q1405
IC1402
Q1411
Q1501
Q1428
Q1502

C-a C-b

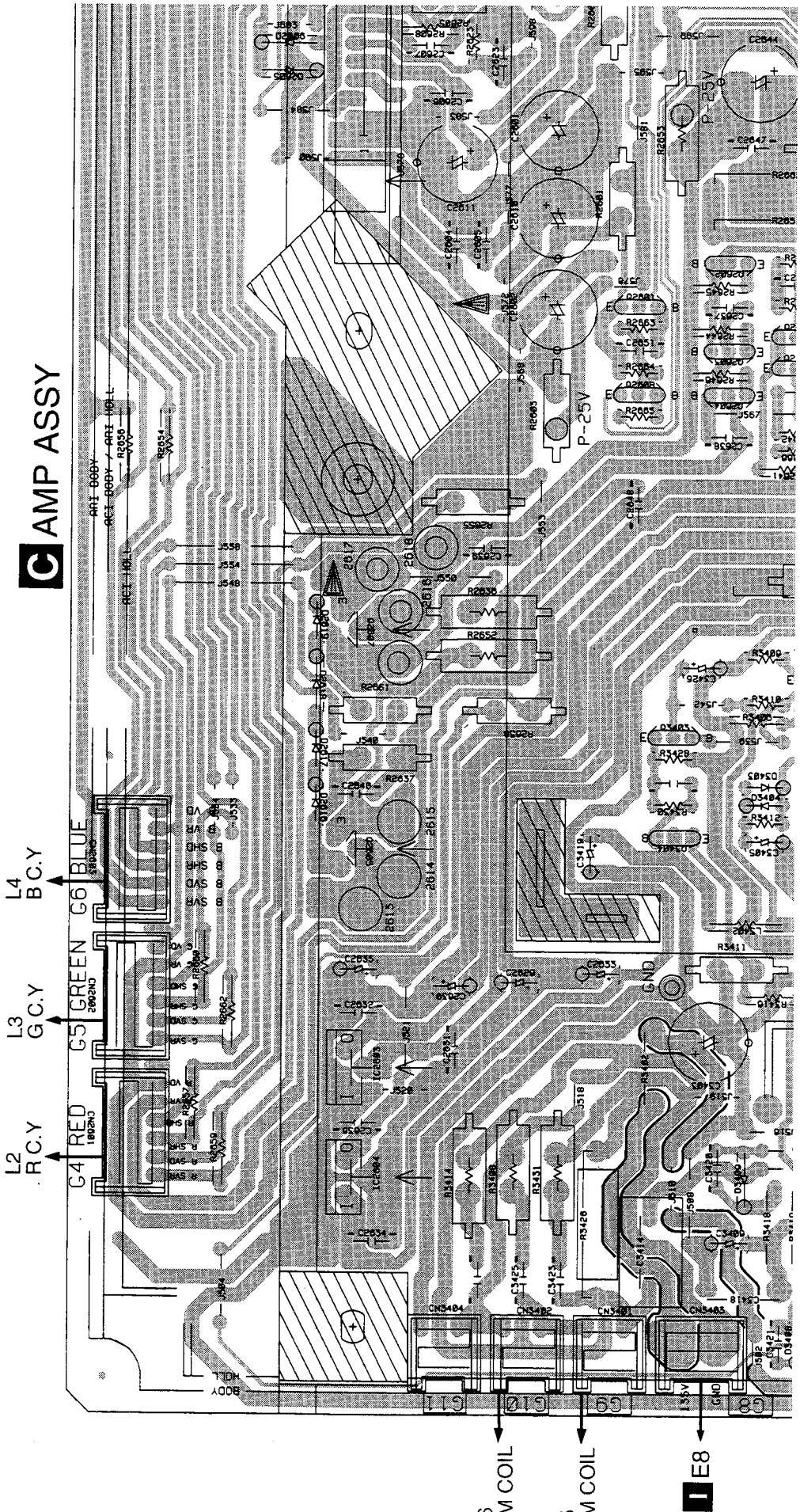

□ : HIGH VOLTAGE GENERATION POINT (EXCEPTIG THE CHARGED SECTION)

C-a C-b

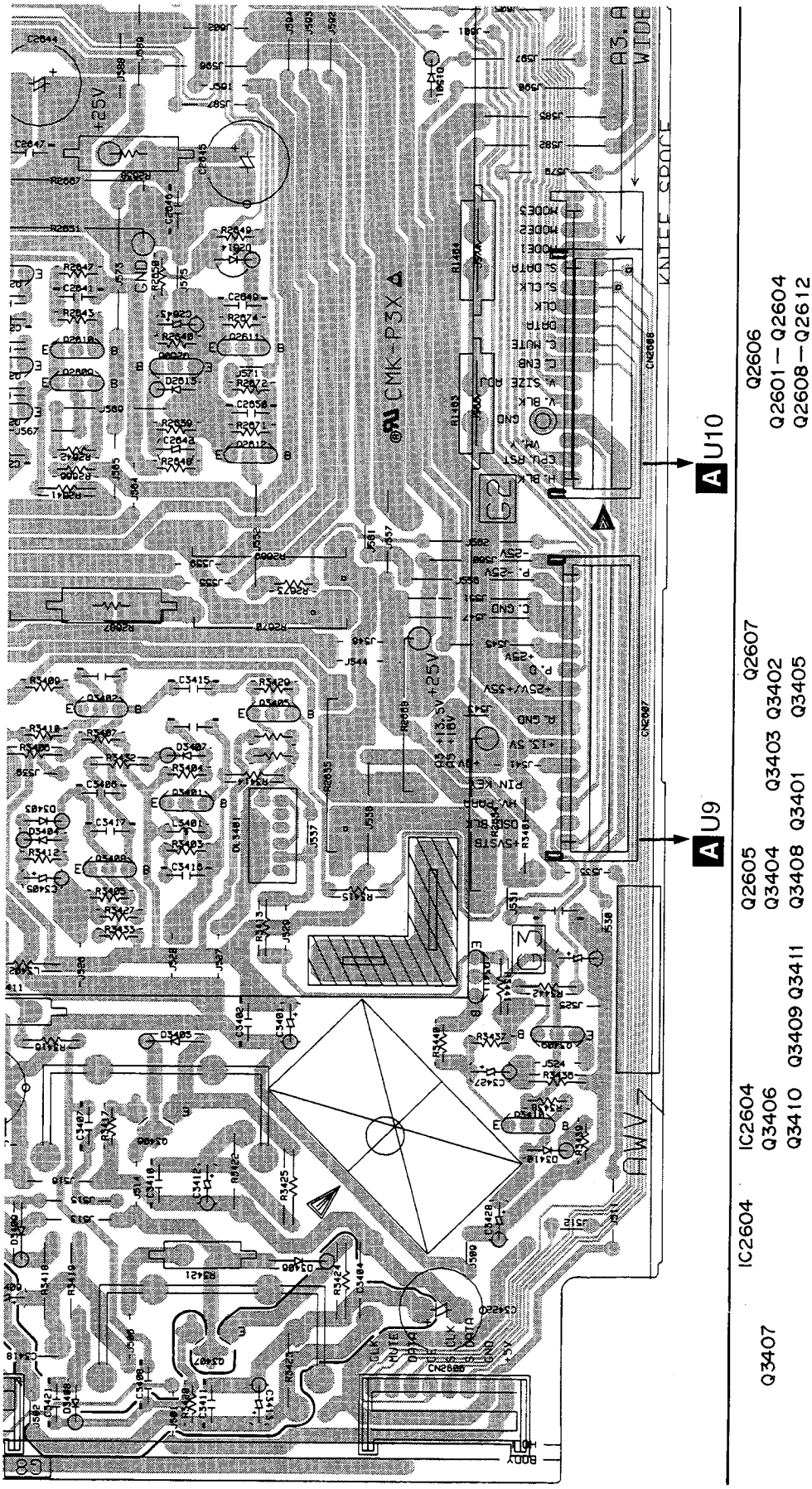
A U10
A U9
Q2606
Q2601 — Q2604
Q2608 — Q2612
Q2607
Q2605
Q3403 Q3402
Q3404
Q3401 Q3405
Q3408
IC2604
Q3406
Q3410 Q3409 Q3411
IC2604
Q3407

C-a C-b

SIDE A

SPEAKERS

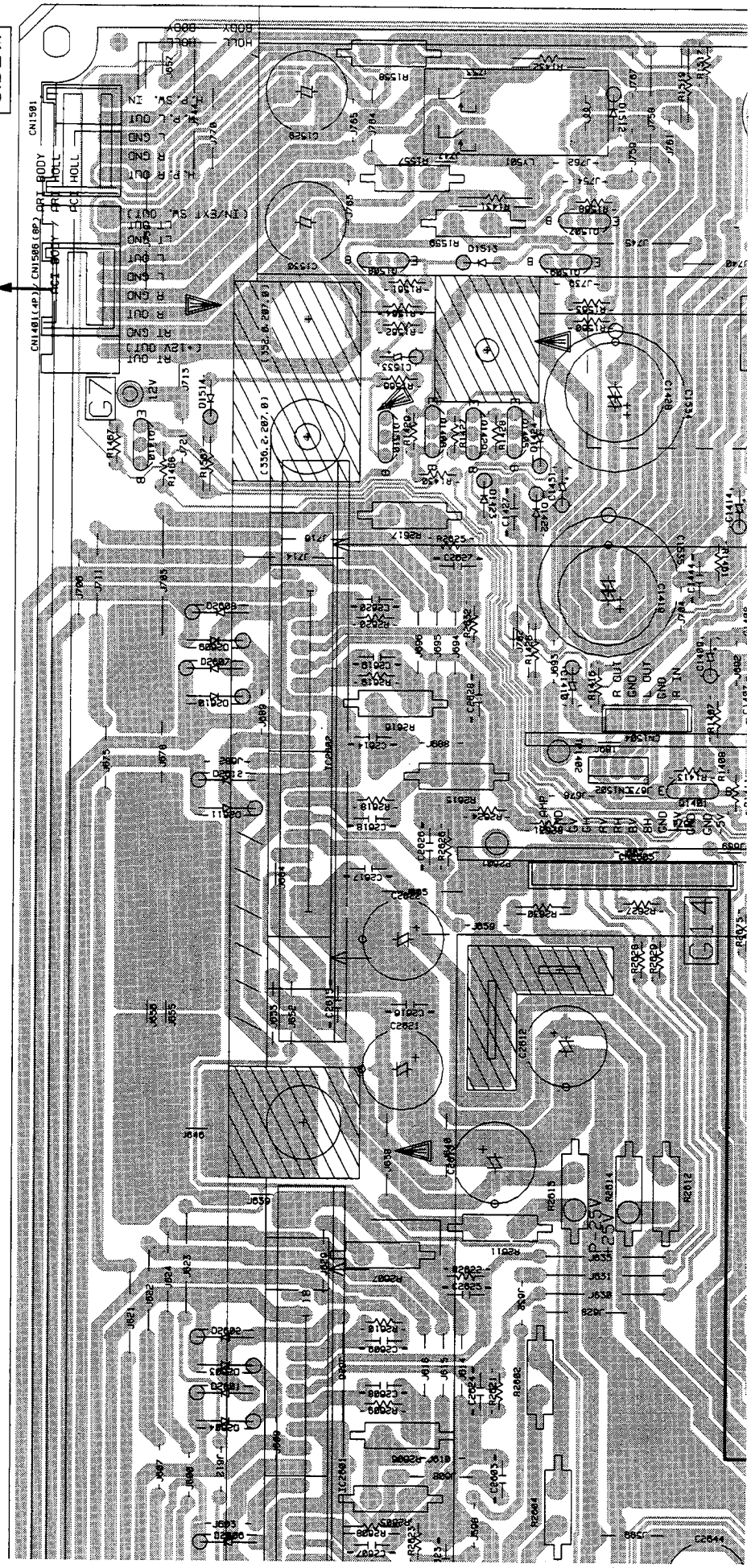

□ : HIGH VOLTAGE GENERATION POINT
(EXCEPTIG THE CHARGED SECTION)

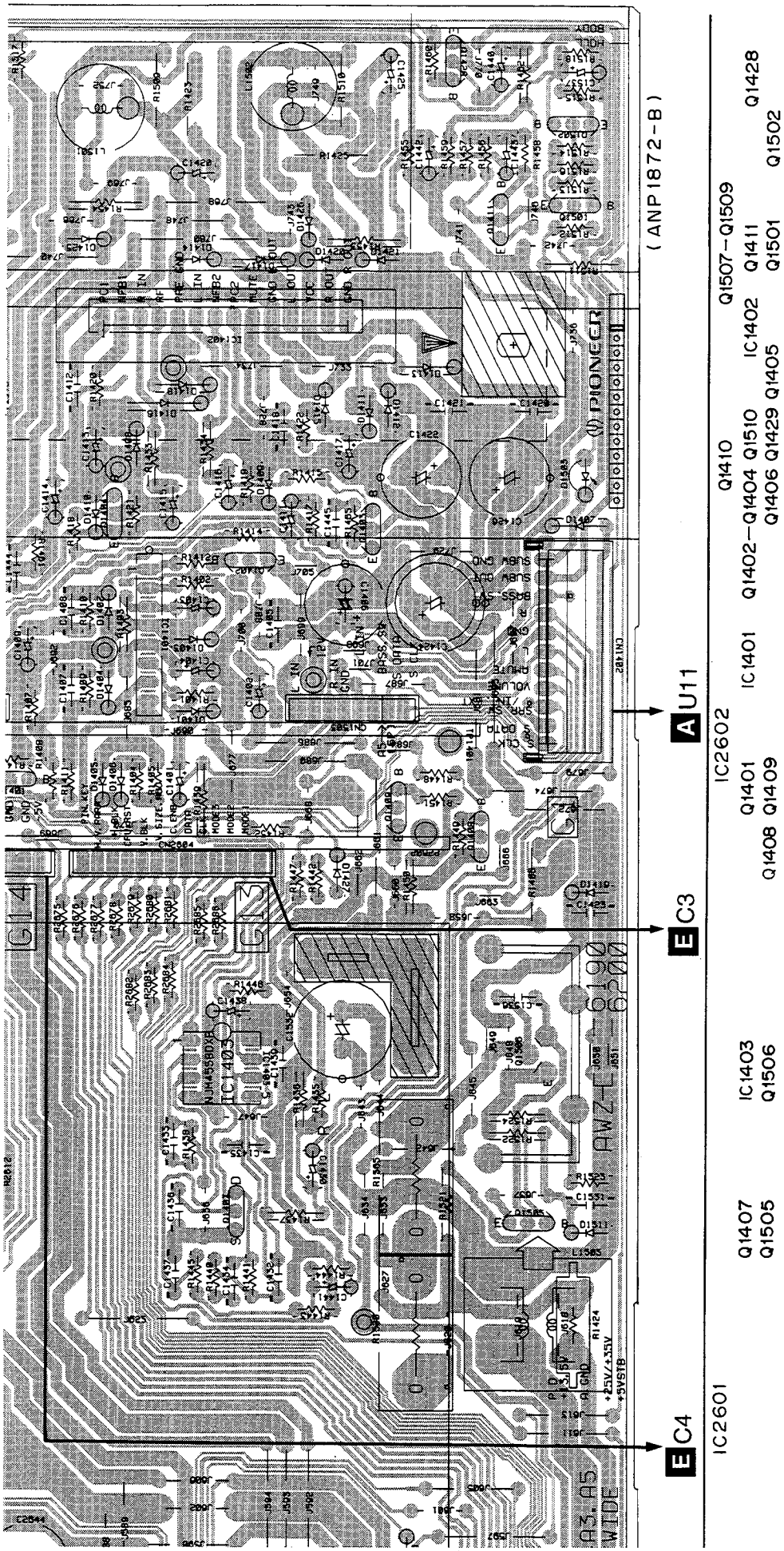
(ANP1872-B)
A U11
E C3
E C4
IC2601
IC2602
Q1407
Q1505
IC1403
Q1506
Q1408 Q1409
Q1401
IC1401
Q1402—Q1404 Q1510
Q1406 Q1429 Q1405
Q1410
IC1402
Q1411
Q1501
Q1507—Q1509
Q1502
Q1428
PIONEER
AW7
WIDE

C-a C-b

4.4 CONVER CONTROL AND CONNECTOR B ASSEMBLIES

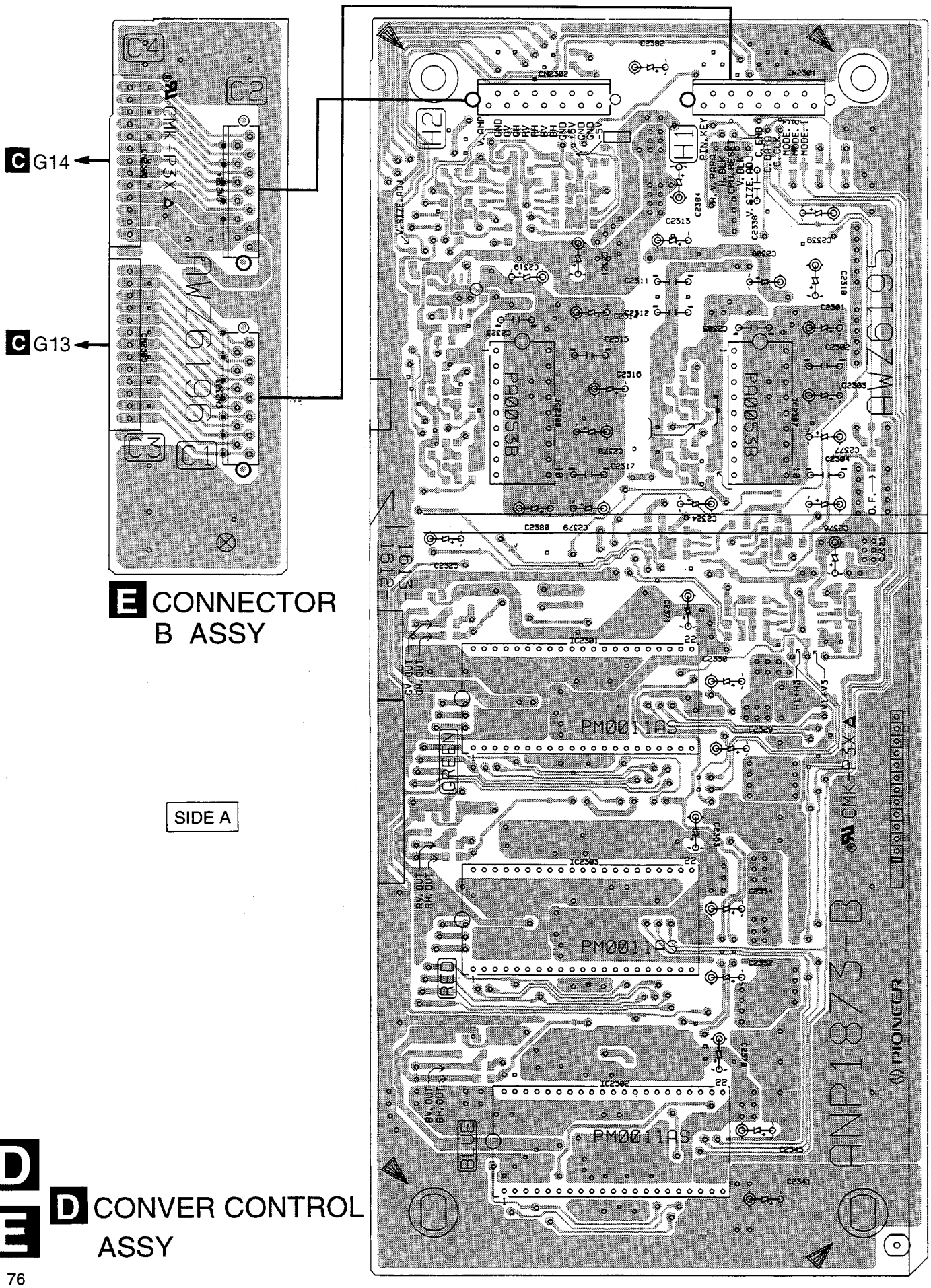

D CONVER CONTROL ASSY

SIDE A

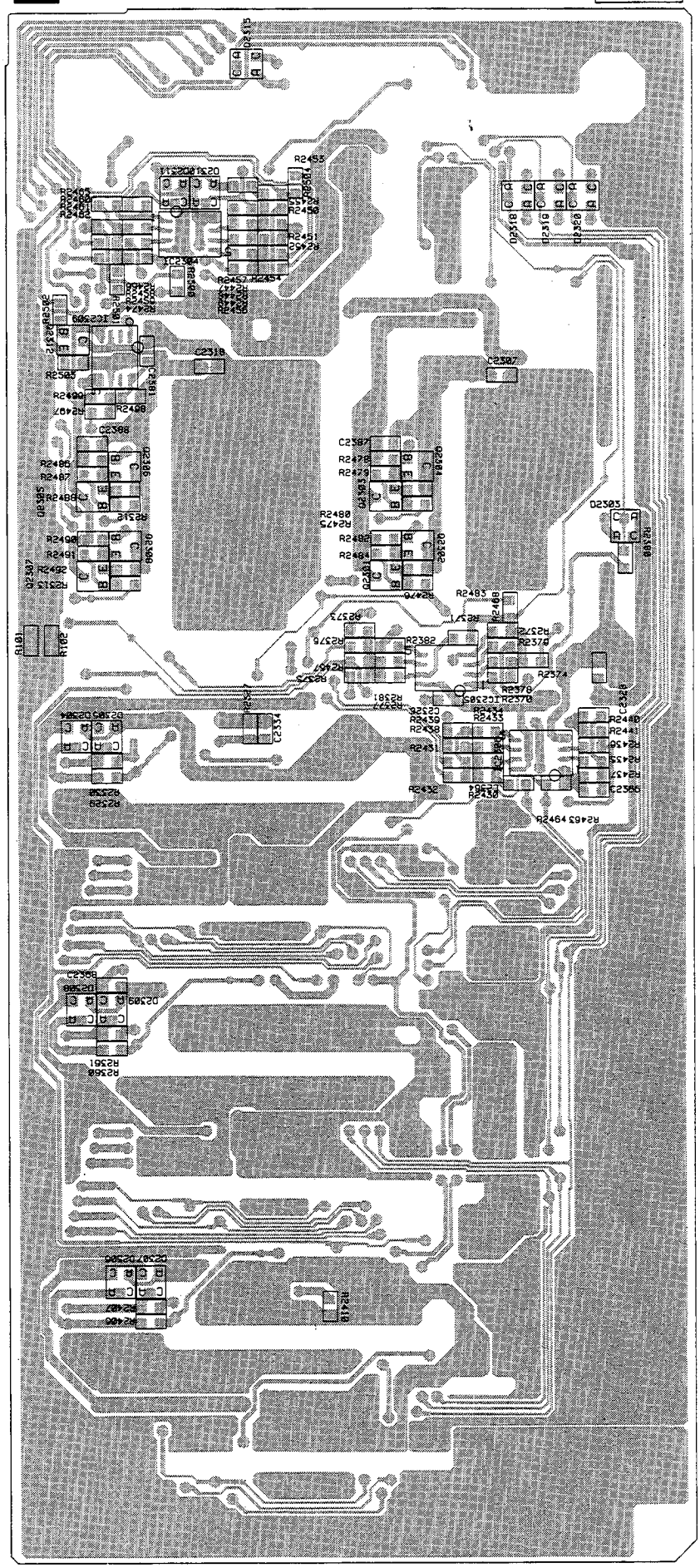

(ANP1873-B)

D CONVER CONTROL ASSY

SIDE B

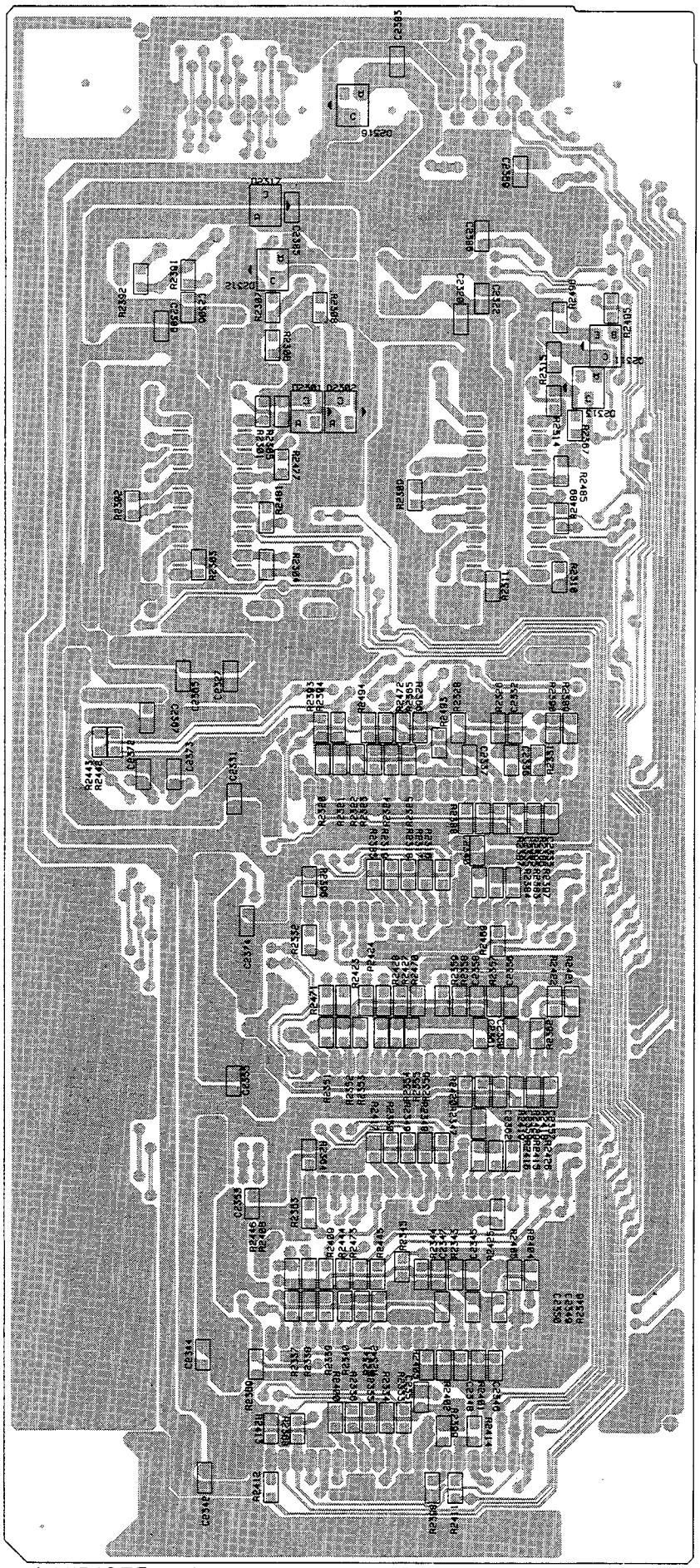

(ANP1873-B)

4.5 R,G AND B CRT AMP ASSEMBLIES

: HIGH VOLTAGE GENERATION POINT (EXCEPTIG THE CHARGED SECTION)

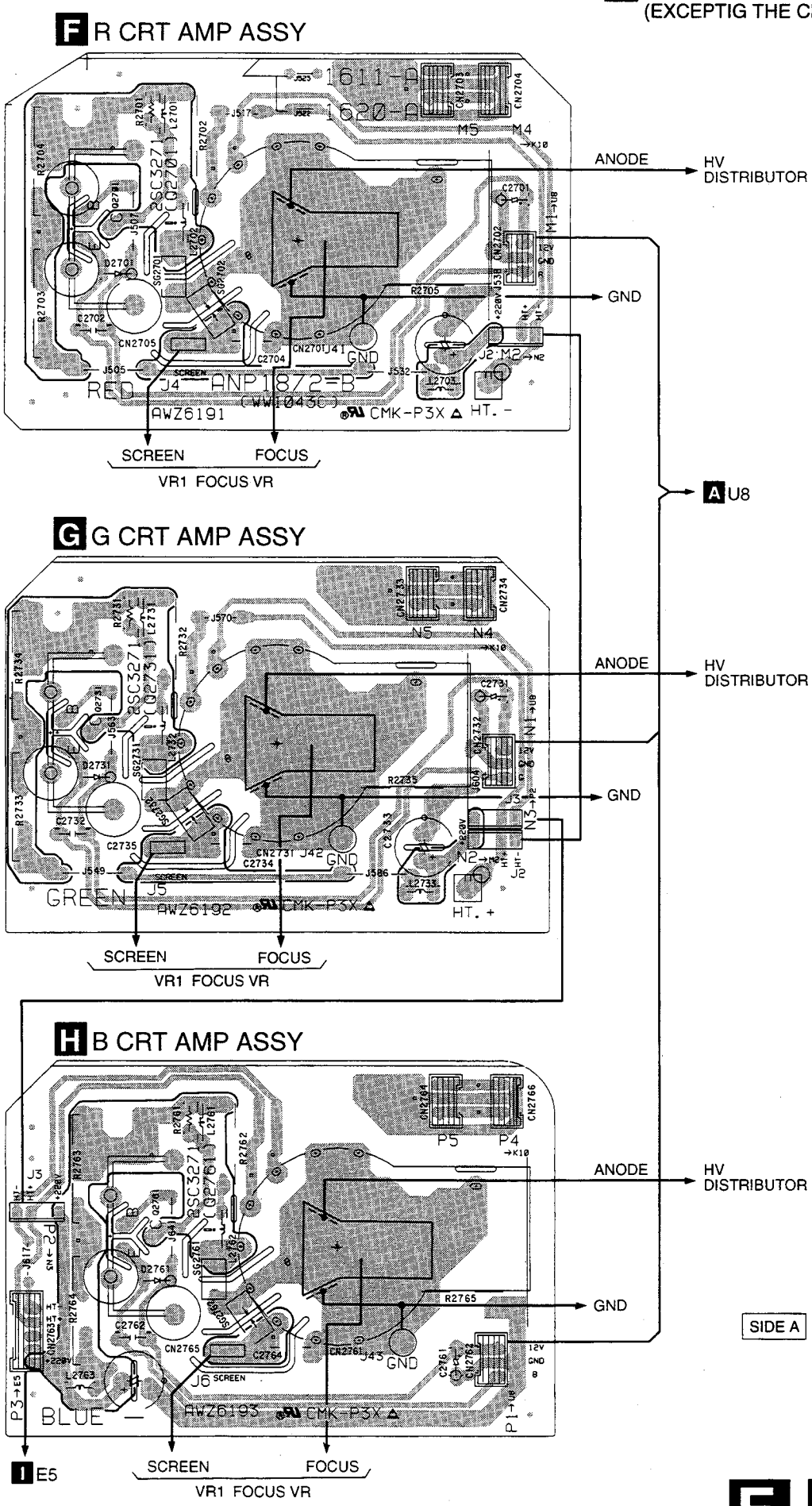

4.6 POWER SUPPLY SERVICE ASSY
(GUIDE PAGE)

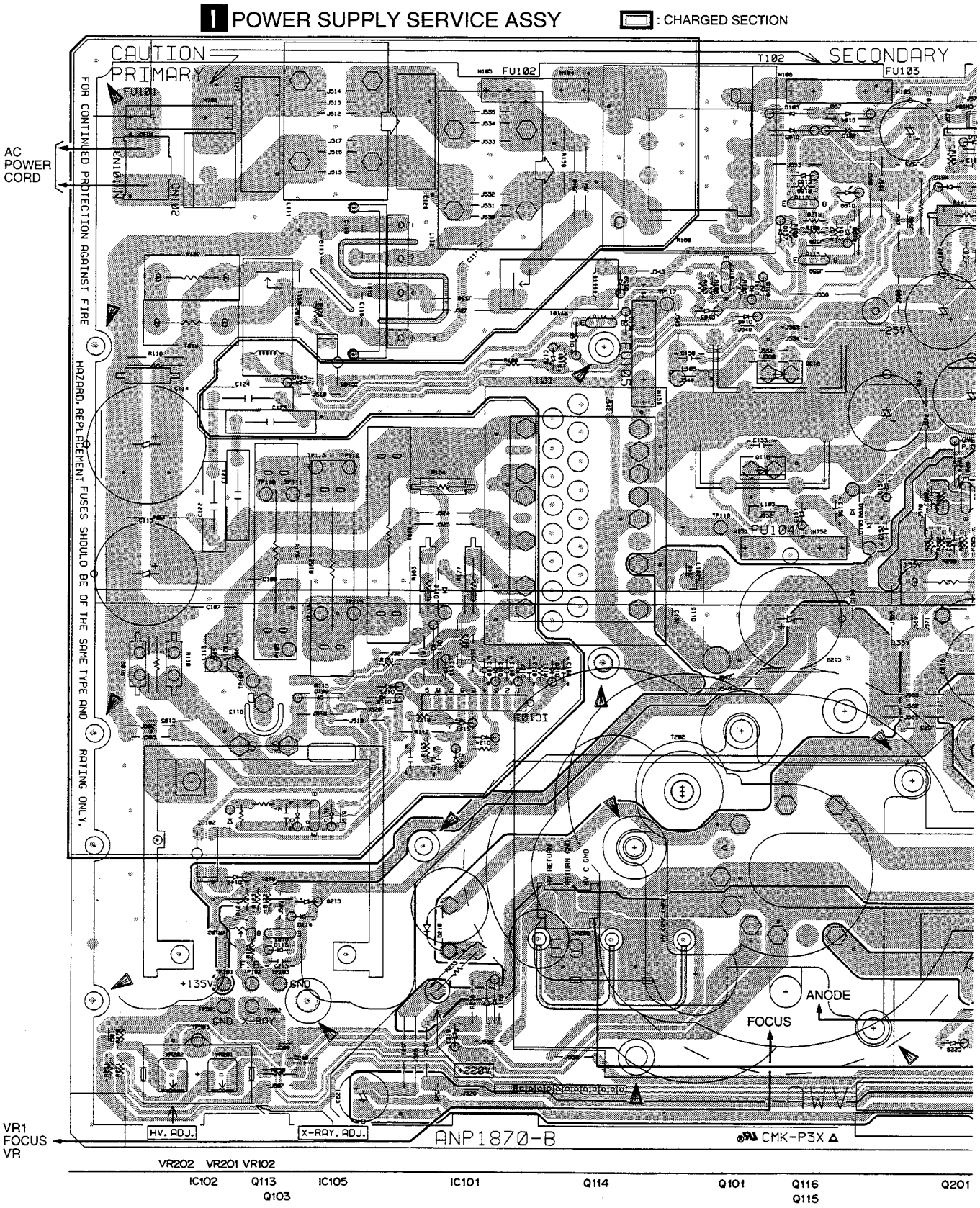

: HIGH VOLTAGE GENERATION POINT
(EXCEPTIG THE CHARGED SECTION)

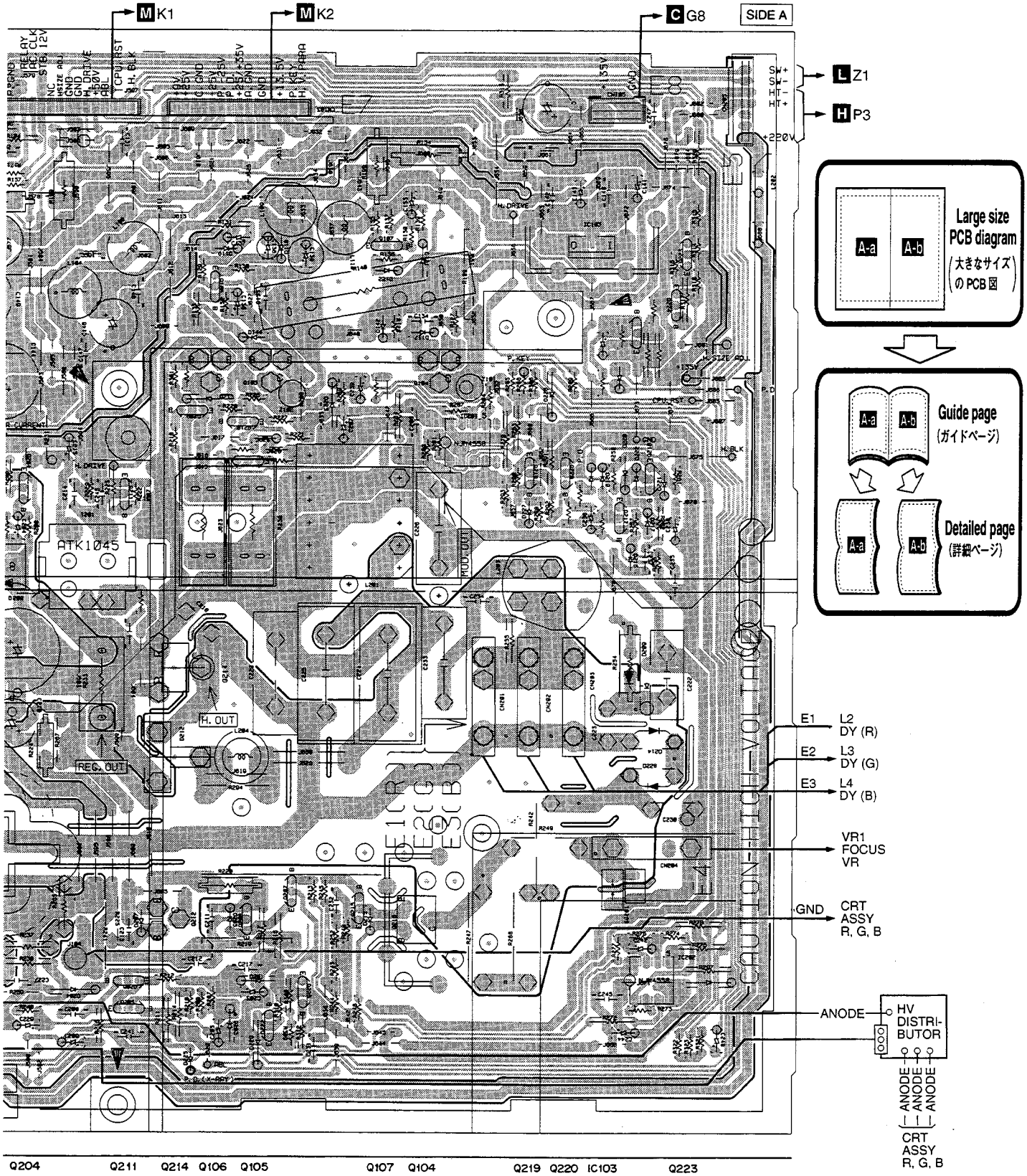

Q204 Q211 Q214 Q106 Q105 Q107 Q104 Q219 Q220 IC103 Q223
Q206 Q212 Q213 Q210 Q207 Q225 Q215 Q216 IC201 Q217 Q218 Q224
Q205 Q209 Q208 Q222 IC202

I-a I-b

: CHARGED SECTION

: HIGH VOLTAGE GENERATION POINT (EXCEPTIG THE CHARGED SECTION)

I POWER SUPPLY SERVICE ASSY

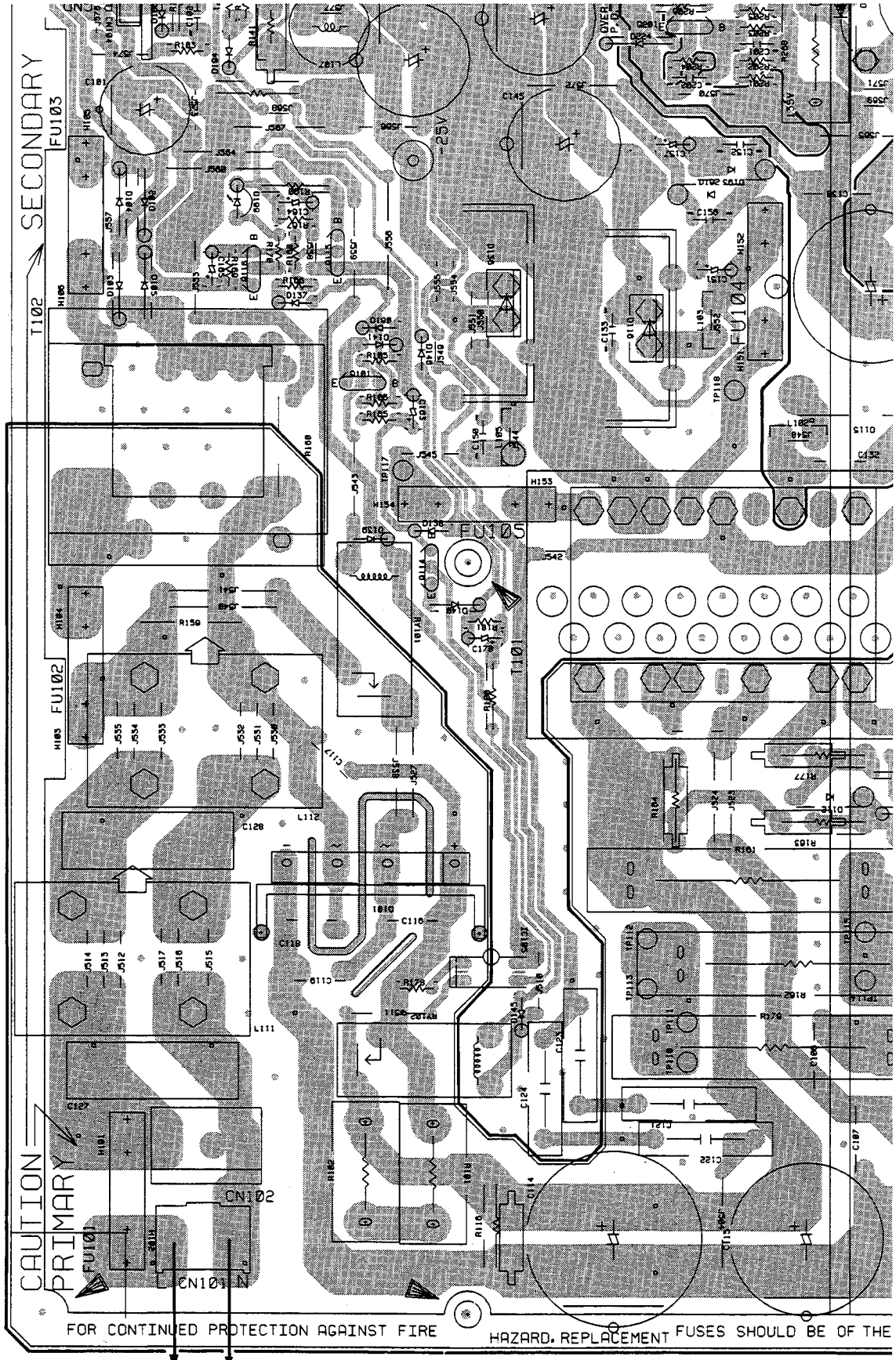

AC POWER CORD

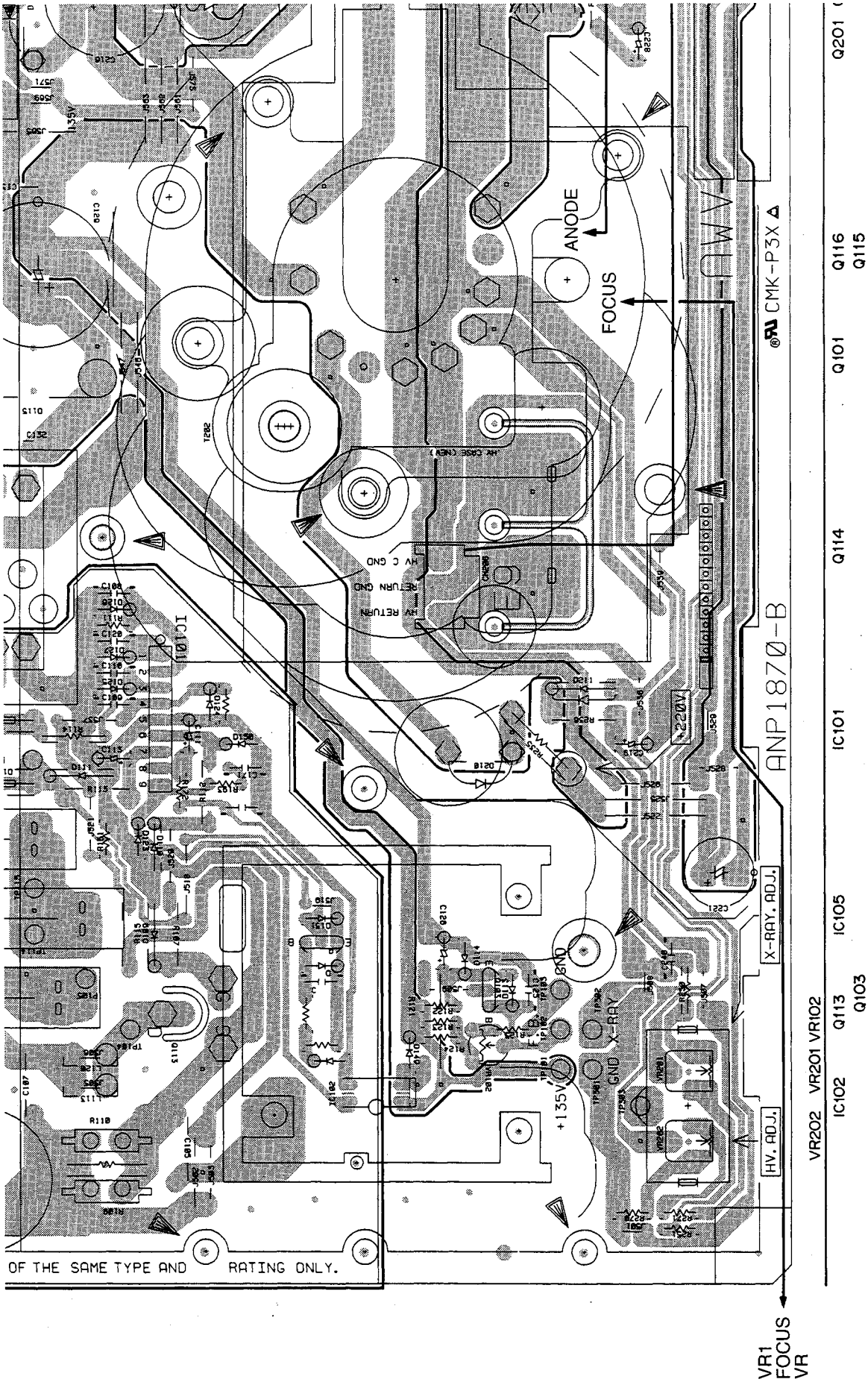
ANODE
FOCUS
CMK-P3X
ANP1870-B
X-RAY. ADJ.
HV. ADJ.
X-RAY
GND
+135V
HV C GND
RETURN GND
HV RETURN
HV CASE (NEG)
IC101
IC102
IC105
Q101
Q113
Q114
Q115
Q116
Q201
Q103
VR202
VR201
VR102
VR1
FOCUS
VR
OF THE SAME TYPE AND
RATING ONLY.

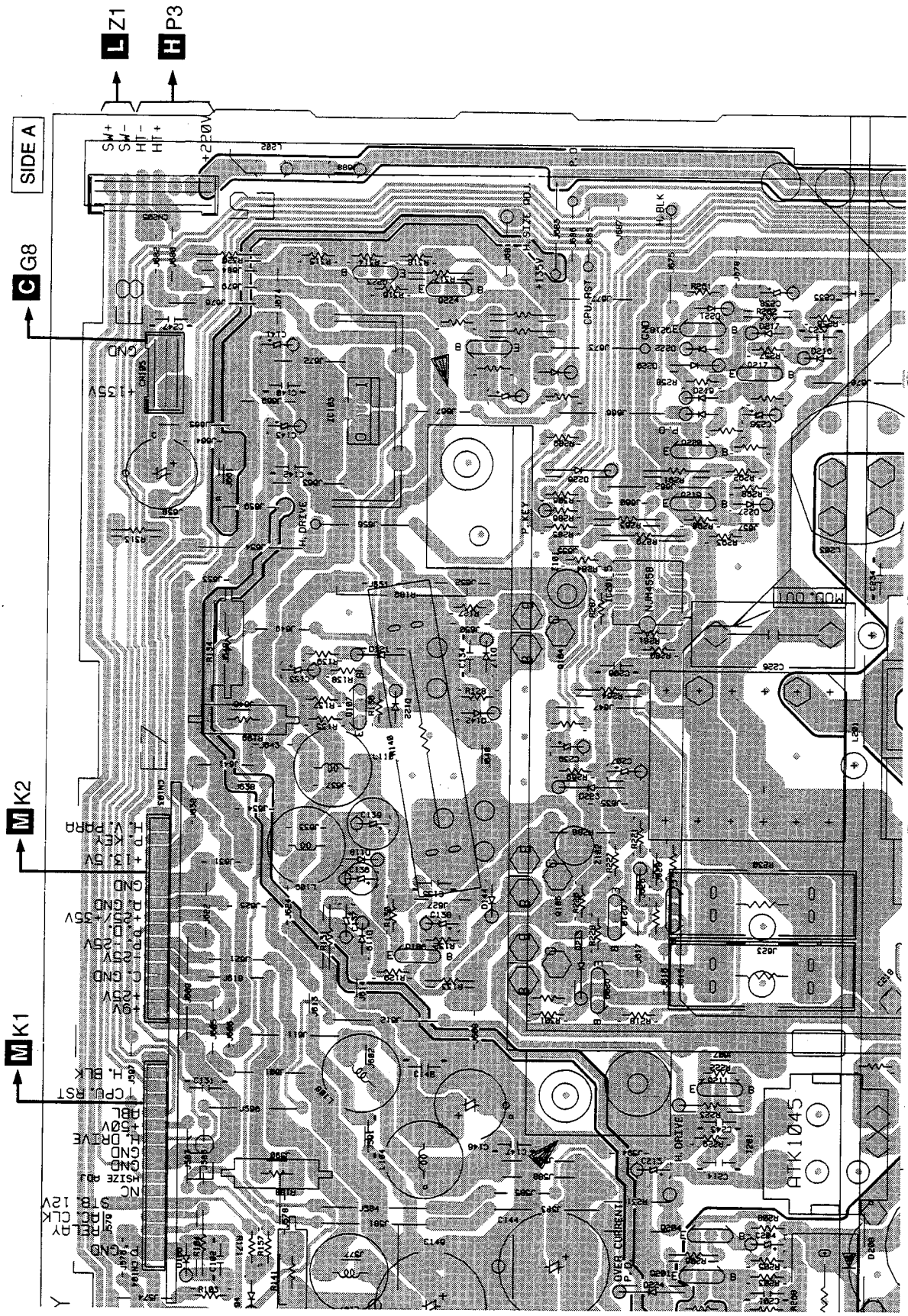

□ : HIGH VOLTAGE GENERATION POINT
(EXCEPTIG THE CHARGED SECTION)

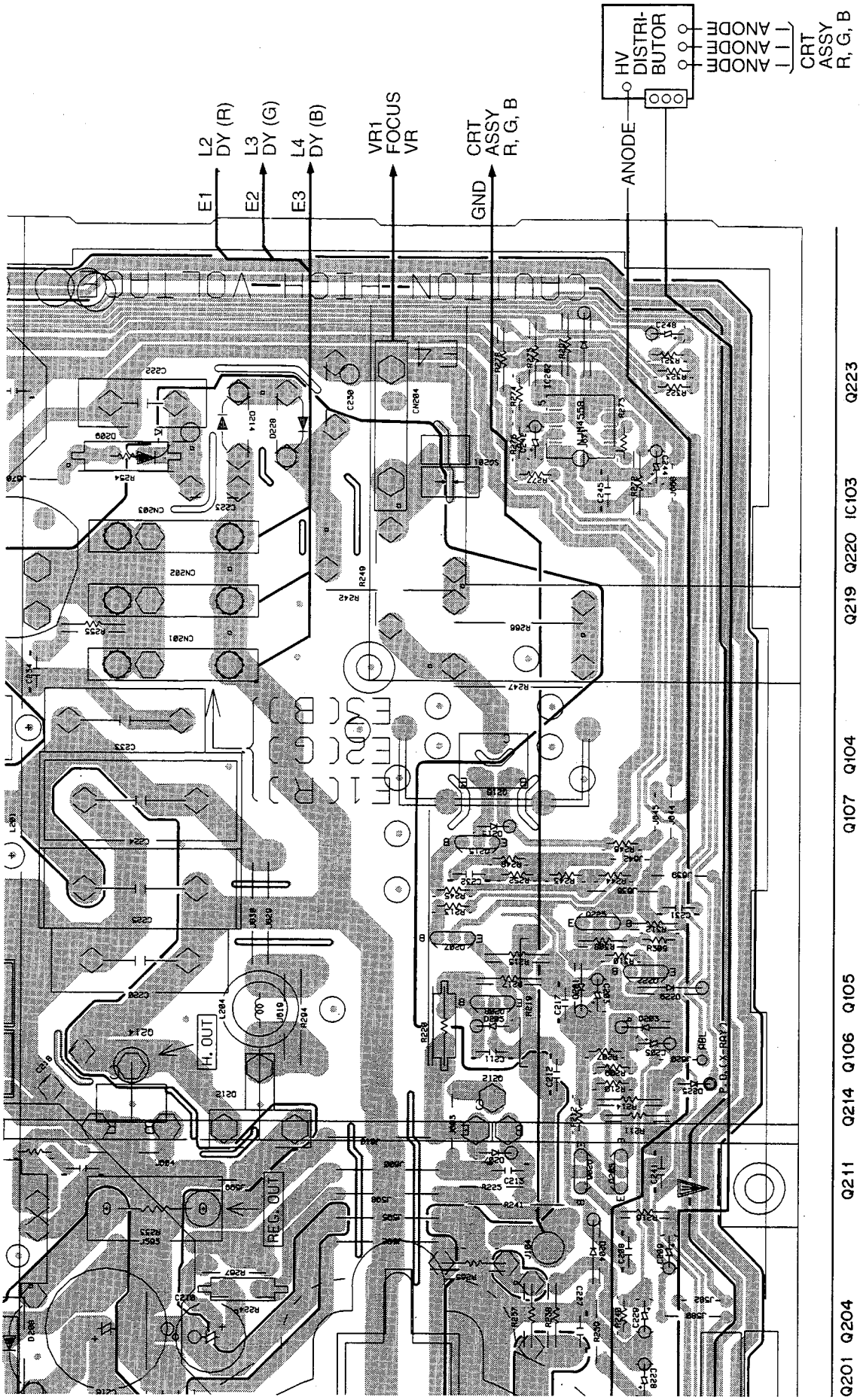
E1
E2
E3
L2 DY (R)
L3 DY (G)
L4 DY (B)
VR1 FOCUS VR
GND
CRT ASSY R, G, B
ANODE
HV DISTRI-BUTOR
ANODE
ANODE
ANODE
CRT ASSY R, G, B
H. OUT
REG. OUT
Q201 Q204
Q211 Q214 Q106 Q105
Q206 Q212 Q213 Q210 Q207 Q225
Q205 Q209 Q208 Q222
Q107 Q104
Q215 Q216 IC201
Q219 Q220 IC103
Q217 Q218 Q224
IC202
Q223

4.7 FRONT CONTROL, INDICATOR, POWER SW AND CONNECTOR A ASSEMBLIES

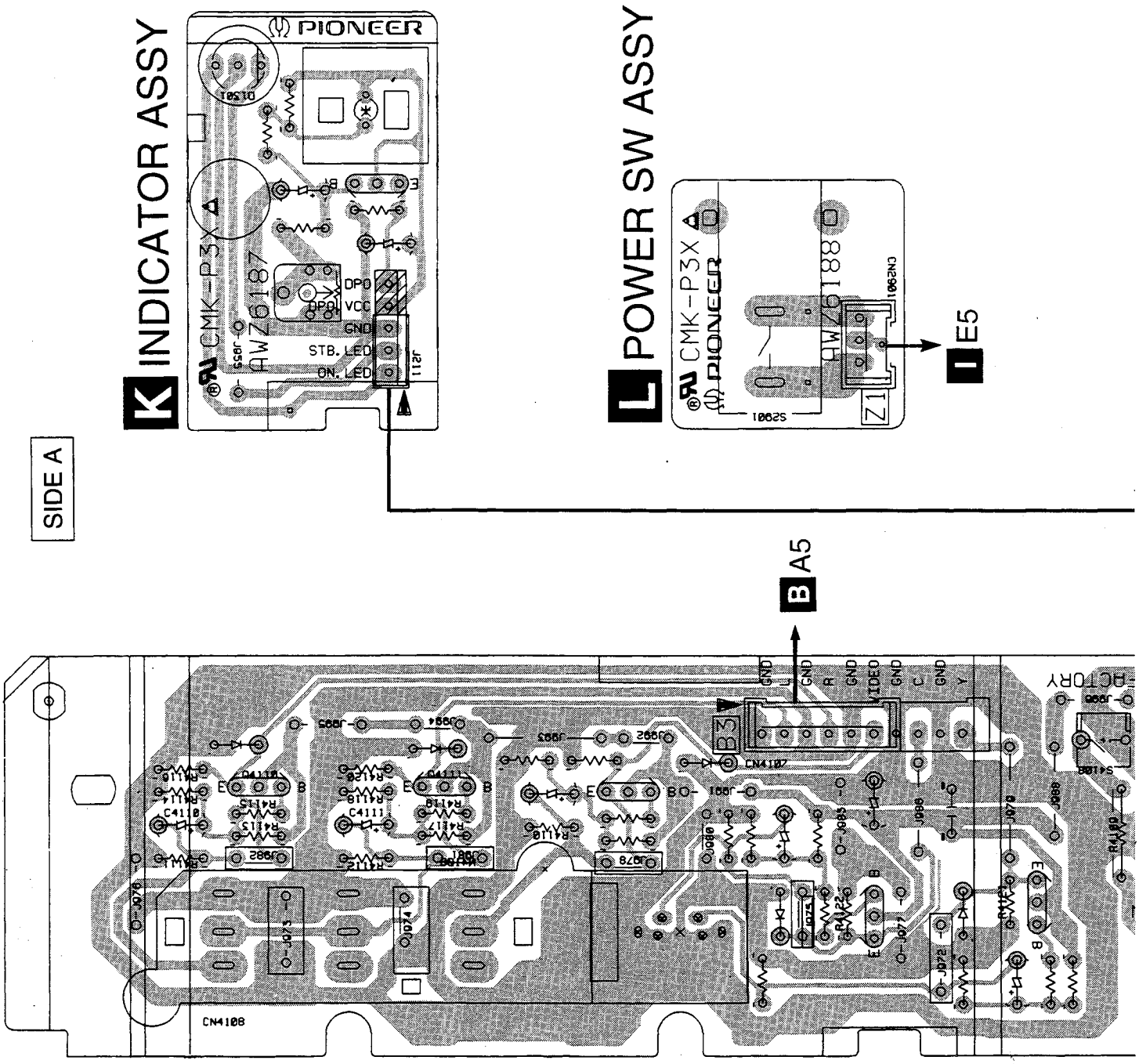

M CONNECTOR A ASSY

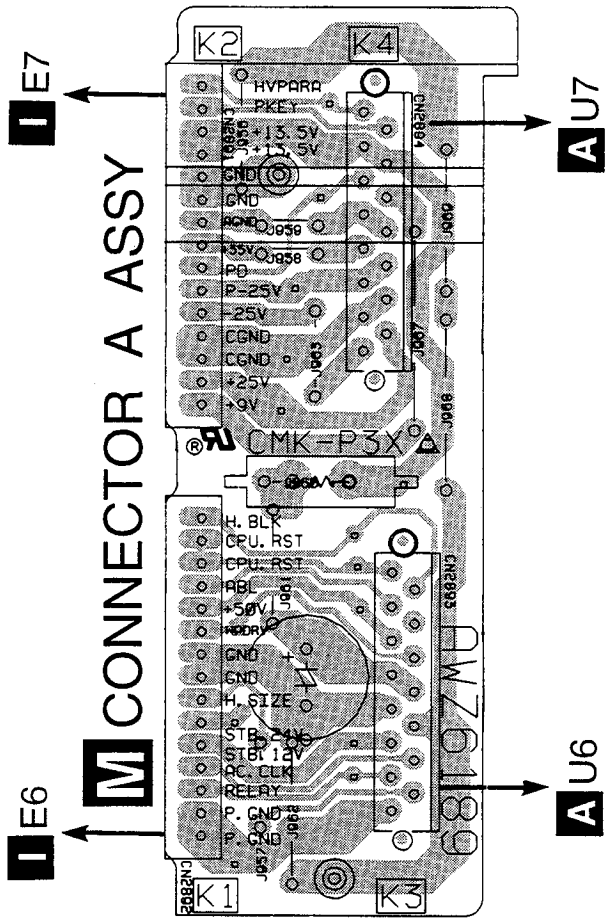

(ANP1871-C)

J FRONT CONTROL ASSY

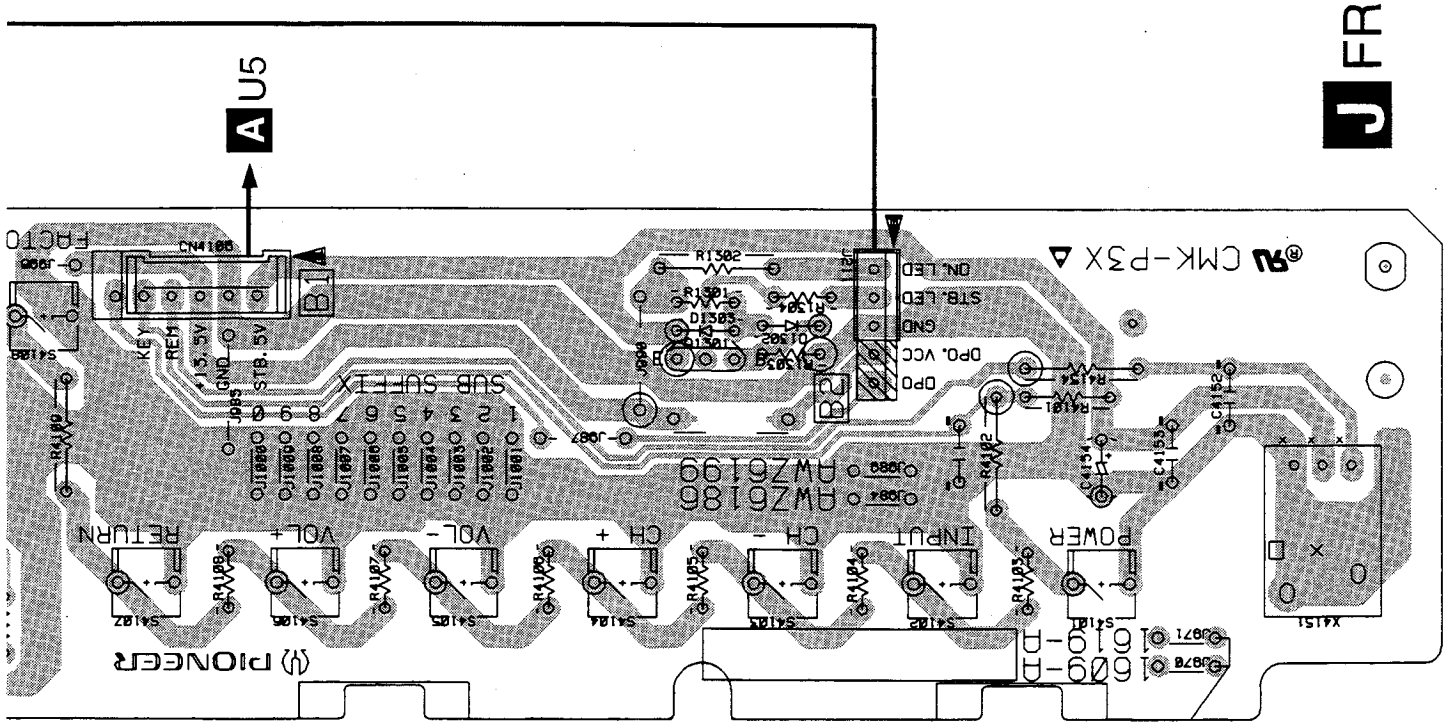

5. PCB PARTS LIST

NOTES: • Parts marked by "NSP" are generally unavailable because they are not in our Master Spare Parts List.

• The ⚠ mark found on some component parts indicates the importance of the safety factor of the part. Therefore, when replacing, be sure to use parts of identical designation.

• When ordering resistors, first convert resistance values into code form as shown in the following examples.

Ex.1 When there are 2 effective digits (any digit apart from 0), such as 560 ohm and 47k ohm (tolerance is shown by J=5%, and K=10%).

560 Ω → 56 × 10^1 → 561 ..... RD1/4PU 561 J

47k Ω → 47 × 10^3 → 473 ..... RD1/4PU 473 J

0.5 Ω → R50 ..... RN2H R50 K

1 Ω → 1R0 ..... RS1P 1R0 K

Ex.2 When there are 3 effective digits (such as in high precision metal film resistors).

5.62k Ω → 562 × 10^1 → 5621 ..... RN1/4PC 5621 F

• Parts marked by ☆ are important parts which relate in X-rays radiation. If any of these parts need to be replaced, always replace with specified parts.

• Parts marked by × are important parts which relate in X-rays radiation. If a failure occurs in any of these parts, replace the printed circuit board assembly where the relevant part has already been adjusted as a working component. Do not replace the actual part itself. If any part marked by × is replaced, there is danger of being exposed to X-rays.

LIST OF ASSEMBLIES

Mark	No.	Description	Part No.
NSP		TUNER·VIDEO ASSY	AWV1609
		├ TUNER·VIDEO ASSY	AWZ6185
		├ FRONT CONTROL ASSY	AWZ6186
		├ INDICATOR ASSY	AWZ6187
		├ POWER SW ASSY	AWZ6188
		└ CONNECTOR A ASSY	AWZ6189
NSP		AMP ASSY	AWV1611
		├ AMP ASSY	AWZ6190
		├ R CRT AMP ASSY	AWZ6191
		├ G CRT AMP ASSY	AWZ6192
		└ B CRTAMP ASSY	AWZ6193
NSP		AV I/O·CNVR. ASSY	AWV1613
		├ CONVER CONTROL ASSY	AWZ6195
		├ CONNECTOR B ASSY	AWZ6196
		└ AV I/O ASSY	AWZ6197
☆		POWER SUPPLY SERVICE ASSY	AWV1615

A TUNER•VIDEO ASSY

SEMICONDUCTORS

Mark	No.	Description	Part No.
		IC902	AT24C04-10PC
		IC4501	CXA1734S
		IC901	PD5395A
		IC903	PST9146
		IC501	TA8845BN
		Q4501, Q4506, Q4513, Q503, Q504	2SA933S
		Q506, Q509-Q511, Q515-Q517	2SA933S
		Q522, Q523, Q534, Q536, Q702	2SA933S
		Q912, Q913, Q920, Q921	2SA933S
		Q4502-Q4505, Q4507, Q4509, Q4512	2SC1740S
		Q501, Q502, Q505, Q507, Q508	2SC1740S
		Q512-Q514, Q518-Q520	2SC1740S
		Q524-Q533, Q535, Q701, Q703	2SC1740S
		Q902-Q910, Q914-Q919, Q924	2SC1740S
		Q931, Q932	2SC1740S
		Q4510, Q521	2SC2235
		Q911	2SD880
		D4501-D4504, D502-D504	HSS104-02
		D511, D512, D529-D535	HSS104-02
		D539, D540, D543-D545	HSS104-02
		D547, D548, D562, D563, D570	HSS104-02
		D572-D579, D901, D902, D916	HSS104-02
		D922, D923, D926-D930	HSS104-02
		D932-D934, D936, D939, D943	HSS104-02
		D947-D954, D957-D960	HSS104-02
		D962, D963, D973, D985, D996	HSS104-02
		D4508, D4509, D509, D510	MTZJ15
		D513-D519, D523-D527	MTZJ15
		D541, D542, D546, D549-D561	MTZJ15
		D564-D569, D571, D909, D921	MTZJ15
		D972, D981	MTZJ15
		D903-D908, D910-D914	MTZJ6.8
		D917-D920, D924, D925	MTZJ6.8
		D937, D938, D940-D942	MTZJ6.8
		D945, D946, D956, D971	MTZJ6.8
		D976, D977, D979, D984	MTZJ6.8
		D992, D993, D995	MTZJ6.8
		D508	RD10ESB2
		D501	RD2.2ESB1
		D4505	RD33ESB3
		D931	RD5.1ESB2
		D4510	RD5.6ESB2
		D505-D507, D520-D522, D528	S5688G
		D536, D537	S5688G

COILS

Mark	No.	Description	Part No.
		L501-L503, L704	LAU100J
		L701	LAU101J
		L702	LAU150J
		L4501-L4505, L902-L905	LAU2R2J
		L703	LAU3R9J
		L901	LAU8R2J

CAPACITORS

Mark	No.	Description	Part No.
		C4510 (3.3μF, 50V)	ACH1128
		C4504 (10μF, 50V)	ACH1129
		TC901	ACM-020
		C503	CCCCH100D50
		C905	CCCCH270J50
		C4537, C546, C565-C567	CCCSL101J50
		C527, C702, C704	CCCSL121J50
		C949, C950	CCCSL221J50
		C4529, C933, C939, C940, C952	CCCSL470J50
		C544, C703, C933, C939	CCCSL680J50

Mark	No.	Description	Part No.
	C913		CCDSL221J50
	C4502, C4503, C4524, C4527		CEAS100M50
	C4531, C4532, C4538, C4542-C4544		CEAS100M50
	C514, C533, C547, C555, C926		CEAS100M50
	C931, C932		CEAS100M50
	C705, C915, C918, C930		CEAS101M10
	C4517		CEAS101M25
	C524		CEAS102M16
	C4505, C4509, C511, C517, C518		CEAS1R0M50
	C903, C914, C919, C921, C938		CEAS1R0M50
	C557		CEAS221M16
	C506, C512, C548, C551, C552		CEAS2R2M50
	C4520, C4540, C951		CEAS331M16
	C922		CEAS3R3M50
	C508, C515, C519, C522, C531		CEAS470M25
	C537, C550, C559, C562, C568		CEAS470M25
	C927		CEAS470M25
	C523		CEAS471M10
	C4521, C4525		CEAS471M16
	C929		CEAS471M25
	C4501, C4506, C4507, C4514-C4516		CEAS4R7M50
	C4518, C516		CEAS4R7M50
	C910, C911		CEASR10M50
	C4511, C507, C536		CEASR47M50
	C902, C936		CFTXA105J50
	C4508		CFTXA224J50
	C4530, C529, C535, C542, C906		CKCYB102K50
	C545, C701		CKCYB103K50
	C530		CKCYB152K50
	C908. C955		CKCYB222K50
	C526, C528, C543, C956		CKCYB331K50
	C4535, C4536		CKCYB332K50
	C505		CKCYB472K50
	C901		CKCYB561K50
	C4519, C4522, C4523, C4526, C4528		CKCYF103Z50
	C4533, C4539, C4541, C538-C541		CKCYF103Z50
	C570, C907, C909, C916, C917		CKCYF103Z50
	C920, C924, C928		CKCYF103Z50
	C509, C520, C525, C534, C549		CKCYF473Z50
	C556, C560, C569, C904, C925		CKCYF473Z50
	C934		CKCYF473Z50
	C912		CQMA102J50
	C502, C532		CQMA103J50
	C501, C521, C558		CQMA104J50
	C510		CQMA123J50
	C504		CQMA183J50
	C4513		CQMA272J50
	C513		CQMA392J50
	C4512		CQMA473J50
	C553, C554		CQMA683J50

RESISTORS

	R565, R566, R571-R573		RD1/2PM100J
	R567		RD1/2PM150J
	R607		RD1/2PM221J
	R569, R570, R575		RD1/2PM271J
	R4546		RD1/2PM331J
	R657		RD1/2PM6R8J
	R4525		RD1/4LMF122J
	R558		RD1/4LMF220J
	R4514		RN1/4PC4302F
	R4515		RN1/4PC6202F
	R1011, R955		RS1MMF3R9J
	R4545		RS2MMF150J
	R4524		RS2MMF272J
	R559		RS2MMF5R6J
	VR4501 (1kΩ)		ACP1040
	Other Resistors		RD1/4PU□□□J

OTHERS

	DL701 DELAY LINE		ATN1012
	PLUG CORD		ADE-082
	J4501 3P HOUSING WIRE		ADX2240
	SHIELD PLATE		ANK1500
	X901 CERAMIC RESONATOR		ASS1015
	X502 CERAMIC RESONATOR		ASS1019
	X501 CRYSTAL RESONATOR (3.579545MHz)		ASS1091
	CN905 PLUG 5-P		KM250MA5
	CN505 PLUG 9-P		KM250MA9
	CN901 11P SOCKET		KP250NA11
	CN501, CN904 12P SOCKET		KP250NA12
	CN902 13P SOCKET		KP250NA13
	CN506, CN903 15P SOCKET		KP250NA15
	TV FRONT END SYSTEM UNIT		AXF1084
	RF SWITCH		AXF1088

B AV I/O ASSY

SEMICONDUCTORS

	IC1602, IC1603		BA7644AN
	IC3003		HA11579
	IC3002		HD49420FS
	IC3001		HM53461ZP-12
	IC3004		M5233P
	IC3301		MC14011BF
	IC3201		MC14066BF
	IC3005		NJM7805FA
	IC1601		TC4052BF
	IC3006		TC4538BF
	Q1602-Q1604, Q1610, Q1701, Q1702		2SA1162
	Q1704, Q1710, Q3003, Q3202, Q3208		2SA1162
	Q3211, Q3212, Q3301, Q3307, Q3313		2SA1162
	Q4704, Q4705		2SA1162
	Q1614		2SC2458
	Q1601, Q1605-Q1609, Q1611-Q1613		2SC2712
	Q1615-Q1617, Q1703, Q1706-Q1708		2SC2712
	Q1711, Q1804, Q3001, Q3002		2SC2712
	Q3004-Q3013, Q3201, Q3203-Q3207		2SC2712
	Q3209, Q3210, Q3213, Q3214		2SC2712
	Q3302-Q3305, Q3311, Q3312, Q3314		2SC2712
	Q4701-Q4703, Q4706		2SC2712
	Q3310		2SK208
	D1601-D1610, D1619-D1622		1SS226
	D3001-D3003, D3007, D3201-D3207		1SS226
	D4701, D4702		1SS226
	D1611-D1618, D3004, D3301, D3302		1SS352
	D3005, D3100		RD6.8MB

COILS AND FILTERS

	F3001		ATF1166
	L3008		ATH1046
	L1801		ATX1008
	F3002		CTJ1002
	L3201		LAU100J

Mark	No.	Description	Part No.
	L3004, L3005		LAU101J
	L3302		LAU120J
	L4701-L4704		LAU2R2J
	L3003		LAU680J
	L3301		LAU6R8J
	L3001, L3002, L3006, L3007		LAU8R2J
	F3201		VTF1064

CAPACITORS

	C3020, C3053		CCSQCH101J50
	C3047, C3306		CCSQCH121J50
	C3015, C3016, C3055, C3312, C3315		CCSQCH151J50
	C3069		CCSQCH220J50
	C3307		CCSQCH221J50
	C3037		CCSQCH270J50
	C3067, C3068		CCSQCH271J50
	C3048, C3052		CCSQCH330J50
	C3054		CCSQCH470J50
	C3314		CCSQCH680J50
	C3313		CCSQCH681J50
	C3305		CCSQCH821J50
	C3308		CCSQSL122J50
	C3208		CCSQSL151J50
	C4711		CCSQSL470J50
	C3044		CEANP100M35
	C1601-C1604, C1606-C1609, C3027		CEAS100M50
	C3039, C3051, C3056, C3060, C3066		CEAS100M50
	C3310, C4702-C4704, C4714, C4717		CEAS100M50
	C3012, C3028, C3034, C3040, C3070		CEAS101M10
	C3072, C3074		CEAS101M10
	C1810, C3201, C3203, C3205, C3302		CEAS101M25
	C3304		CEAS101M25
	C1611, C1612, C1614-C1618, C1636		CEAS1R0M50
	C1704		CEAS1R0M50
	C3013, C3014, C3023, C3050		CEAS220M50
	C1619, C1621, C1623, C1629, C1630		CEAS221M16
	C1637, C1641, C3071		CEAS221M16
	C3017		CEAS2R2M50
	C3319		CEAS330M35
	C4710, C4716		CEAS331M16
	C1632, C1634, C1707, C3022, C3206		CEAS470M25
	C3311, C3316, C3318		CEAS470M25
	C1627, C4701, C4708		CEAS471M16
	C3036		CEAS4R7M50
	C3025, C3026		CEASR22M50
	C3018, C3019		CEASR47M50
	C3078		CEHAQ101M10
	C3077		CEHAQ101M25
	C3038, C3041		CEJA1R0M50
	C3064, C3065		CFTXA334J50
	C3309		CKSQYB392K50
	C1703, C3024, C3059, C4707		CKSQYF102Z50
	C1701, C1702, C3006, C3035, C3045		CKSQYF103Z50
	C3083, C3202, C3204, C3303		CKSQYF103Z50
	C1605, C1610, C1620, C1622		CKSQYF104Z50
	C1625, C1626, C1628, C1631, C1640		CKSQYF104Z50
	C1705, C1808, C1809, C3005, C3007		CKSQYF104Z50
	C3009-C3011, C3021, C3029, C3030		CKSQYF104Z50
	C3032, C3033, C3043, C3057, C3058		CKSQYF104Z50
	C3063, C3073, C3075, C3076		CKSQYF104Z50
	C3080-C3082, C3207, C3301, C3317		CKSQYF104Z50
	C4705, C4706, C4709, C4712, C4713		CKSQYF104Z50
	C4715		CKSQYF104Z50
	C3001-C3004, C3042, C3046		CKSQYF223Z50
	C3049		CKSQYF333Z50
	C3061, C3062		CQMA153J50
	C3031		CQMA681J50

RESISTORS

	R1674		RD1/4LMF220J
	R1668		RS1/2S221J
	R3213		RS1MMF560J
	R3068, R3069, R3100		RS2MMF3R9J
	R1699		RS2MMF5R6J
	VR3002 (470Ω)		ACP1039
	VR3001, VR4701 (1kΩ)		ACP1040
	VR3003		VRTS6VS222
	Other Resistors		RS1/10S□□□J

OTHERS

	CN1602	PIN JACK(9P)	AKB1251
	CN1771	PIN JACK 1-P	AKB7042
		HEAT SINK M	ANH-697
	X3001	CRYSTAL RESONATOR (3.579545MHz)	ASS1091
	CN1603	PLUG 6-P	KM250MA6
	CN3002	12P PLUG	KM250NA12L
	CN3003	13P PLUG	KM250NA13L
	CN3001	PLUG 15-P	KM250NA15L
	TV FRONT END SYSTEM UNIT		AXF1084
	SCREW		PBZ30P080FMC

C AMP ASSY

SEMICONDUCTORS

	IC1402		LA4280-P
	IC1401		M5222L
	IC1403		NJM4558DXP
	IC2604		NJM78M05FA
	IC2603		NJM79M05FA
	IC2601, IC2602		STK392-110
	Q3407		2SA1837
	Q1405, Q1409, Q1429, Q2608-Q2610		2SA933S
	Q3408		2SA933S
	Q2607		2SB950A
	Q1401-Q1404, Q1406, Q1408		2SC1740S
	Q1410, Q1411, Q1428, Q2601-Q2604		2SC1740S
	Q2606, Q2611, Q2612, Q3401-Q3403		2SC1740S
	Q3405, Q3409-Q3411		2SC1740S
	Q3404		2SC2235
	Q3406		2SC4793
	Q2605		2SD1276A
	Q1407		2SK373
	D2614		BR3371XJ30A
	D1405, D1407, D1408, D1411-D1421		HSS104-02
	D1423-D1427, D2613, D2616-D2619		HSS104-02
	D3403, D3404, D3407, D3410		HSS104-02
	D1401-D1404		MTZJ15
	D3408, D3409		MTZJ39
	D1406, D1422		MTZJ5.1
	D1409, D1410		MTZJ6.8
	D2601-D2612, D3405, D3406		S5688G

COILS

	L3401		LAU330J
	L3402		LAU4R7J

Mark	No.	Description	Part No.
CAPACITORS			
	C1436		CCCCH100D50
	C2607-C2609, C2618-C2620		CCCCH151J50
	C3417		CCCCH180J50
	C2623-C2628		CCCCH221J50
	C3416		CCCCH390J50
	C1432, C1437		CCCCH470J50
	C1407, C1408		CCCSL101J50
	C1412, C1418, C2639, C2640, C2648		CCCSL151J50
	C3423, C3425		CCCSL221K2H
	C2642		CEANP100M35
	C1401, C1402, C1430, C1441, C3405		CEAS100M50
	C1431, C1443		CEAS101M10
	C2629, C2633, C3412, C3413		CEAS101M25
	C1424		CEAS102M35
	C1440, C1442, C3426, C3427		CEAS1R0M50
	C1406		CEAS221M16
	C3419		CEAS221M25
	C2601, C2602, C2610-C2613		CEAS221M35
	C2621, C2622, C2644, C2645		CEAS221M35
	C1415, C1416		CEAS2R2M50
	C1413, C1417		CEAS330M35
	C1419, C1428		CEAS331M25
	C2630, C2635		CEAS331M6R3
	C1403, C1404, C1409, C1438, C2643		CEAS470M25
	C3401, C3428		CEAS470M25
	C1414		CEAS470M50
	C1420, C1425		CEASR10M50
	C1410, C1411		CEASR47M50
	C3403, C3422		CEHAQ220M2C
	C3409		CEHAQ2R2M2C
	C1434, C2637, C2638, C2641		CKCYB102K50
	C3420, C3421		CKCYB102K50
	C1444, C1445		CKCYB332K50
	C1433, C1435		CKCYB331K50
	C2603-C2606, C2614-C2617		CKCYF103Z50
	C2631, C2632, C2634, C2636		CKCYF103Z50
	C2646, C2647, C2649-C2651, C3402		CKCYF103Z50
	C3410, C3411		CKCYF103Z50
	C1405, C1421, C1423, C1427, C1429		CKCYF473Z50
	C1439		CKCYF473Z50
	C3404, C3418		CKDYE103P2H
	C3406		CQMA103J50
	C3415		CQMA104J50
	C3414		CQMA104K2E
	C3407, C3408		CQMA472K2E
RESISTORS			
	R3402		RD1/2LMF331J
	R2654, R2656, R2657, R2659, R2660		RD1/2PM151J
	R2662		RD1/2PM151J
	R1431, R1432		RD1/2PM152J
	R3418, R3419		RD1/2PM183J
	R3424, R3425		RD1/2PM2R2J
	R1406		RD1/4LMF150J
	R1423, R1425		RD1/4LMF2R2J
	R3422, R3423		RD1/4LMF390J
	R3401		RD1/4LMF4R7J
	R3421		RS1MMF102J
	R3411		RS1MMF121J
	R2601, R2602, R2611, R2612		RS1MMF220J
	R2605-R2607, R2615-R2617		RS1MMF2R2J
	R2655, R2658, R2661		RS1MMF470J
	R2637		RS1MMF562J
	R2603, R2604, R2613, R2614		RS1MMFR47J
	R3408, R3431		RS2MMF102J
	R2636, R2652		RS2MMF2R2J
	R1424, R1463, R1464		RS2MMF2R7J
	R2638, R2653		RS2MMF4R7J
	R2634, R2635, R2668-R2670, R2687		RS3LMF120J
	R2651		RS3LMF1R8J
	R2667		RS3LMF2R2J
	R3426		RS3LMF561J
	Other Resistors		RD1/4PU□□□J
OTHERS			
	SCREW		ABA1227
	PLATE SPRING		ANG1569
	HEAT SINK M		ANH-697
	AUDIO HEAT SINK		ANH1533
	SCREW		BBZ30P080FCU
	CN2604, CN2605	13P PLUG	KM200IA13
	CN3402	PLUG 3-P	KM250MA3L
	CN3401	PLUG 3-P	KM250MA3LR
	CN1401, CN3403	PLUG 4-P	KM250MA4L
	CN2602	PLUG 6-P	KM250MA6L
	CN2601	PLUG 6-P	KM250MA6LR
	CN2606	L-PLUG(8P)	KM250MA8L
	CN1402	11P PLUG	KM250NA11L
	CN2608	12P PLUG	KM250NA12L
	CN2607	PLUG 15-P	KM250NA15L
	SCREW		PBZ30P080FMC

D CONVER CONTROL ASSY

Mark	No.	Description	Part No.
SEMICONDUCTORS			
	IC2309		CA0005AM
	IC2304-IC2306		NJM4558MD
	IC2307, IC2308		PA0053B
	IC2301-IC2303		PM0011AS
	Q2301, Q2303, Q2305, Q2307, Q2311		2SA1162
	Q2302, Q2304, Q2306, Q2308, Q2312		2SC2712
	D2301, D2303-D2311, D2315		1SS226
	D2318-D2320		1SS226
	D2312		RD15MB
	D2302		RD5.1MB
	D2313, D2316, D2317		RD6.8MB
CAPACITORS			
	C2332-C2337, C2345-C2350		CCSQSL101J50
	C2356-C2361		CCSQSL101J50
	C2364		CCSQSL120J50
	C2372, C2373		CCSQSL221J50
	C2366		CCSQSL680J50
	C2324, C2325, C2363, C2370, C2371		CEAS100M50
	C2375		CEAS101M25
	C2301, C2303, C2313, C2376		CEAS1R0M50
	C2316		CEAS1R5M50
	C2378		CEAS220M50
	C2339		CEAS221M16
	C2314, C2380		CEAS330M35
	C2308, C2310, C2319, C2321		CEAS331M6R3
	C2329, C2330, C2341, C2343, C2352		CEAS331M6R3
	C2354, C2382, C2384		CEAS331M6R3
	C2379		CEAS470M25
	C2377		CEASR47M50
	C2338		CFTXA104J50
	C2315		CFTYA184J50

Mark	No.	Description	Part No.
	C2317, C2323		CFTYA224J50
	C2306, C2307, C2309, C2318, C2320		CKSQYF104Z50
	C2322, C2326-C2328, C2331, C2340		CKSQYF104Z50
	C2342, C2344, C2351, C2353, C2355		CKSQYF104Z50
	C2362, C2365, C2367-C2369, C2374		CKSQYF104Z50
	C2381, C2383, C2385-C2388		CKSQYF104Z50
	C2305, C2312		CQMA102J50
	C2302, C2304		CQMA471J50
	C2311		CQPA152J2A
RESISTORS			
	All Resistors		RS1/10S□□□J
OTHERS			
	CN2301, CN2302	CABLE HOLDER	AKT1011

E CONNECTOR B ASSY

OTHERS			
	CN2303, CN2304	CABLE HOLDER	AKT1011
	CN2305, CN2306	13P SOCKET	KP2001A13L

F R CRT AMP ASSY

SEMICONDUCTORS			
	Q2701		2SC3271F
	D2701		HSS104-02
COILS			
	L2703		LAU101J
	L2701, L2702		LAU470J
CAPACITORS			
	C2704	(1000pF, 2kV)	ACG1001
	C2701		CEAS101M25
	C2702		CKCYB681K50
RESISTORS			
	R2705	(47Ω, 1/2W)	ACN-225
	R2702	(1kΩ, 1/2W)	ACN1006
⚠	R2703, R2704		RS3LMF392J
	Other Resistors		RD1/4PU□□□J
OTHERS			
	SG2702	SPARK GAP	AEX-019
	SG2701	SPARK GAP	AEX1024
	CN2701	CRT SOCKET	AKG1005
	HEAT SINK M		ANH1541
	CN2702	PLUG 3-P	KM250MA3R
	SCREW		PMB30P100FMC

G G CRT AMP ASSY

SEMICONDUCTORS			
	Q2731		2SC3271F
	D2731		HSS104-02
COILS			
	L2733		LAU101J
	L2731, L2732		LAU470J
CAPACITORS			
	C2734	(1000pF, 2kV)	ACG1001
	C2733	(4.7μF, 250V)	ACH1283
	C2731		CEAS101M25
	C2732		CKCYB681K50
RESISTORS			
	R2735	(47Ω, 1/2W)	ACN-225
	R2732	(1kΩ, 1/2W)	ACN1006
⚠	R2733, R2734		RS3LMF392J
	Other Resistors		RD1/4PU□□□J
OTHERS			
	SG2732	SPARK GAP	AEX-019
	SG2731	SPARK GAP	AEX1024
	J2, J3	LEAD WITH 4P HOUSING	ADX2271
	CN2731	CRT SOCKET	AKG1005
	HEAT SINK M		ANH1541
	CN2732	PLUG 3-P	KM250MA3
	SCREW		PMB30P100FMC

H B CRT AMP ASSY

SEMICONDUCTORS			
	Q2761		2SC3271F
	D2761		HSS104-02
COILS			
	L2763		LAU101J
	L2761, L2762		LAU470J
CAPACITORS			
	C2764	(1000pF, 2kV)	ACG1001
	C2761		CEAS101M25
	C2762		CKCYB681K50
RESISTORS			
	R2765	(47Ω, 1/2W)	ACN-225
	R2762	(1kΩ, 1/2W)	ACN1006
⚠	R2763, R2764		RS3LMF392J
	Other Resistors		RD1/4PU□□□J
OTHERS			
	SG2762	SPARK GAP	AEX-019
	SG2761	SPARK GAP	AEX1024
	CN2761	CRT SOCKET	AKG1005
	HEAT SINK M		ANH1541
	CN2762	PLUG 3-P	KM250MA3B
	CN2763	PLUG 5-P	KM250MA5
	SCREW		PMB30P100FMC

I POWER SUPPLY SERVICE ASSY

SEMICONDUCTORS			
⚠	IC101		AN8029
×	IC201, IC202		NJM4558DXP
	IC103		NJM7809FA
	IC102, IC105		PC817CD
	Q201, Q204		2SA1145
×	Q205, Q206		
	Q107, Q116		2SA933S
	Q209, Q210, Q217, Q224		2SA933S
×	Q101, Q106, Q114, Q115, Q207		2SC1740S
	Q215, Q218-Q220, Q223		2SC1740S
×	Q103, Q208		2SC2705
	Q211		2SC3332
	Q216		2SC4686A
⚠	Q214		2SC5299
	Q212		2SD1276A
	Q104, Q105, Q213		2SD2399

Mark	No.	Description	Part No.
⚠	Q113		2SK1938
	D112, D192, D193		10DF2
	D199		BR3371XJ30A
×	D211		ERA22-02
⚠	D209		ERB06-15
	D210, D214, D228		ERB06-15
	D208		ERB93-02L3
	D116, D136		ERC90M-02
	D115		ERD29-06J
⚠	D212		ESC021M-15
	D113, D122, D137-D142		HSS104-02
	D144-D146, D149, D194, D201		HSS104-02
	D205, D207, D215-D217		HSS104-02
	D219-D222, D224-D227		HSS104-02
	D119		HZS18-1L
	D106, D118, D121		HZS6B1L
	D114		HZS6C2L
	D101		LN6SB60-4000
	D150		MA723
	D123		MTZJ12
×	D204		
	D109, D110, D131		MTZJ20
	D111		MTZJ24
	D124-D127, D190		MTZJ5.1
	D117		RD5.1ESB1
⚠×	D203		
	D223		RD5.1ESB1
	D102-D105		S5688G
COILS			
	L111, L112		ATF1183
	L104, L107-L110, L204		ATH-059
⚠	L201		ATL1131
⚠	L203		ATL1132
	L113, L120		ATX1021
	L202		LTA272J
TRANSFORMERS			
⚠	T101		ATK1107
	T102		ATT1272
⚠	T201		ATK1045
⚠×	T202		
RELAYS			
	RY102		ASR1036
⚠	RY101		BSR1009
CAPACITORS			
	C121-C124	(4700pF, 250V)	ACE1105
⚠	C127, C128	(0.22μF, 250V)	ACE1107
	C132	(100pF, 2kV)	ACG-032
	C118, C119	(0.01μF, 250V)	ACG-501
	C222	(1500pF, 2kV)	ACG1007
	C106	(3300pF, 2kV)	ACG1008
	C223	(270pF, 2kV)	ACG1010
	C218	(680pF, 2kV)	ACG1024
	C230	(4700pF, 2kV)	ACG1028
	C105, C107	(2200pF, 2kV)	ACG1046
	C216	(10μF, 160V)	ACH1117
	C115, C129	(470μF, 200V)	ACH1147
	C114	(820μF, 200V)	ACH1148
	C152, C156, C202, C211, C213		CCCSL101K2H
	C133, C150		CCCSL221K2H
	C243		CCCSL271K2H
	C219, C238, C239, C242		CEAS100M50
	C246		CEAS1R0M50
	C229		CEAS4R7M50
	C248		CEASR10M50
	C210		CEHAQ100M2C
	C137, C138, C151, C153, C165		CEHAQ100M50
	C207		CEHAQ100M50
	C141, C143, C204		CEHAQ101M16
	C113		CEHAQ101M50
	C101		CEHAQ102M25
	C111, C126, C136		CEHAQ1R0M50
	C221		CEHAQ220M2C
	C228		CEHAQ220M50
	C205, C209		CEHAQ221M10
	C139, C203		CEHAQ221M16
	C144, C145, C149		CEHAQ222M35
	C215		CEHAQ2R2M50
	C146		CEHAQ331M35
	C163, C164, C170		CEHAQ470M25
	C157		CEHAQ4R7M2A
	C225		CFPA103J3C
	C224		CFPA153J3C
	C220		CFPA562J3C
	C233		CFPMA564J2E
	C226		CFPMA824J2E
	C231		CFTYA105J50
	C240		CKCYB102K50
	C201, C208, C217		CKCYB103K50
	C212, C214, C234		CKCYB222K2H
	C241, C247		CKCYB222K50
	C120		CKCYB471K50
	C135		CKCYB681K50
	C102		CKCYF103Z50
	C134, C140, C142, C147, C148		CKCYF473Z50
	C206, C227		CKCYF473Z50
	C130		CKDYE103P2H
	C131		CKDYF103Z50
	C125, C237		CQMA103J50
	C108, C110		CQMA182J50
	C235		CQMA223J50
	C171		CQMA333J50
	C109		CQMA473J50
	C232		CQMA683J50
RESISTORS			
	R241	(47Ω, 1/2W)	ACN-225
	R159	(1MΩ, 1/2W)	ACN1008
	R249	(33kΩ, 1/2W)	ACN1011
	R101, R102, R233	(1Ω, 5W)	ACN1032
⚠	R268	(1Ω, 5W)	ACN1032
	R160	(2.2MΩ, 1/2W)	BCN1022
	R113		RD1/2LMF100J
	R107, R112		RD1/2LMF220J
	R224		RD1/2LMF222J
	R239		RD1/2LMF562J
	R238		RD1/2PM122J
×	R215		RD1/2PM361J
	R255		RD1/2PM561J
⚠	R231		RD1/4LMF221J
	R236		RD1/4LMF2R2J
⚠	R288		RD1/4LMF3R9J
⚠	R267		RD1/4LMF470J
	R225		RD1/4LMF471J
	R115		RD1/4LMF681J
	R237, R265		RN1/2PC3902F

Mark	No.	Description	Part No.
	R123,R124		RN1/4PC1603F
	R133		RN1/4PC2101F
	R132		RN1/4PC2431F
	R125		RN1/4PC3601F
	R270		RN1/4PC7502F
	R235		RS1LMF220J
	R163,R164		RS1MMF333J
	R116		RS1MMF473J
×	R220		
	R177		RS1MMF820J
	R109,R110		RS1MMFR22J
	R294		RS2LMF100J
	R121		RS2LMF223J
	R141,R188		RS2MMF100J
	R254		RS2MMF153J
	R134,R199		RS2MMF1R2J
	R242,R247,R266		RS3LMF104J
	R219		RS3LMF682J
	R189		RS3LMFR68J
	R161,R162,R179		RT10PZ120K
	R140		RT10PZ1R5K
	R230		RT5PZ470K
×	R207		
×	R209		
×	R214		
×	R215		
×	R212		
×	R213		
×	R210		
×	R236		
×	R272		
×	R273		
×	R274		
×	R275		
×	R276		
×	R277		
×	R297		
×	R216		
×	R217		
×	R218		
×	R250		
×	R251		
×	R270		
×	R271		
×	VR201	(1kΩ)	
×	VR202	(22kΩ)	
	VR102		VRTS6VS102
	Other Resistors		RD1/4PU□□□J

OTHERS

	SG201	SPARK GAP	AEX1024
	J27	HV RETURN WIRE	ADX2338
	J26	HV CABLE	ADY1032
	NYLON BINDER		AEC-093
	CN201-CN204	PLUG 3-P	AKM1055
	CN101	PLUG 2-P	AKM1130
	H101-H104,H151-H154		AKR1003
	HEAT SINK M		ANH-697
	HEAT SINK		ANH-880
	HEAT SINK B		ANH1021
	HEAT SINK		ANH1371
	SW HEAT SINK		ANH1505
⚠ NSP	HV DISTRIBUTOR		AXW1046

Mark	No.	Description	Part No.
	SCREW		BBZ30P080FCU
	SCREW		BBZ30P100FZK
	CN103,CN104	15P PLUG	KM2001A15
	CN105	PLUG 4-P	KM250MA4
	CN205	PLUG 7-P	KM250MA7
	SCREW		PBH30P120FNI
	SCREW		PBZ30P080FMC
	SCREW		VPZ40P100FMC
⚠	FU102	FUSE (500mA/125V)	AEK1010
⚠	FU105	FUSE (4A/125V)	REK1082
⚠	FU104	FUSE (6.3A/125V)	REK1085
⚠	FU101	FUSE (8A/125V)	REK1086

J FRONT CONTROL ASSY

SEMICONDUCTORS

	Q1301	2SA933S
	Q4110,Q4111	2SC1740S
	D1302,D1303	HSS104-02

SWITCHES

	S4101-S4108	VSG1009

CAPACITORS

	C4152	CCCSL121J50
	C4154	CEAS101M10
	C4110,C4111	CEJA1R0M50
	C4153	CKCYF103Z50

RESISTORS

	R1302	RD1/2PMF561J
	Other Resistors	RD1/4PU□□□J

OTHERS

	CN4108	PIN JACK(3P)	AKB1250
	CN4106	PLUG 5-P	KM250MA5
	CN4107	PLUG 6-P	KM250MA6

K INDICATOR ASSY

SEMICONDUCTOR

	D1301	AEL1152

L POWER SW ASSY

SWITCH

	S2901	ASG1083

OTHERS

	CN2901	PLUG 3-P	KM250MA3

M CONNECTOR A ASSY

OTHERS

	CN2891,CN2892	15P SOCKET	KP2001A15L

6. ADJUSTMENT

■ Key Indication of the Remote Control Unit

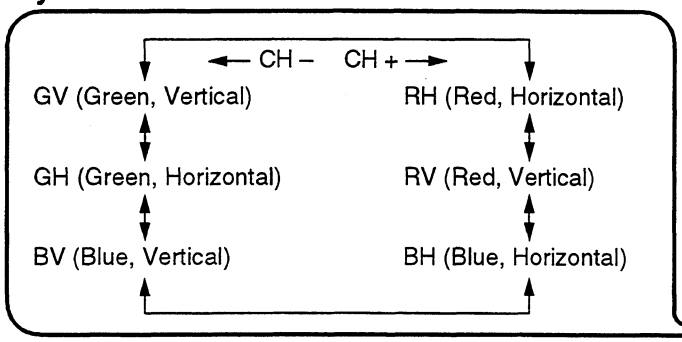

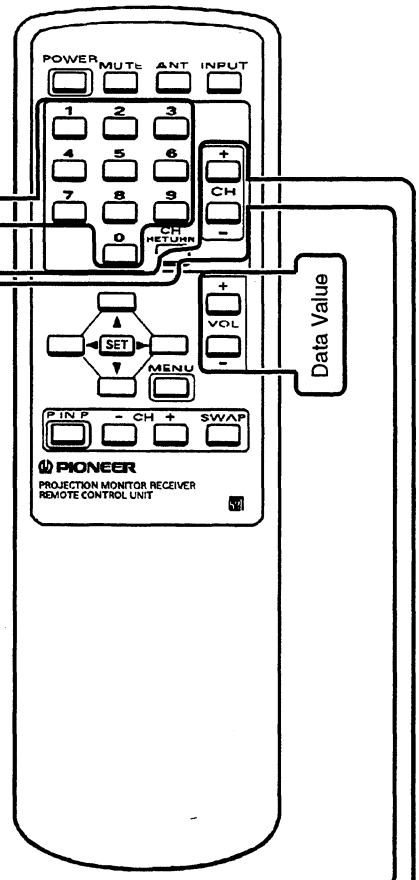

• Adjustment Items

Adjustment RANGE	Adjustment OFFSET	Adjustment Name	Numeric Keys	Adjustment Items	Type GH	GV	RH	RV	BH	BV
	○	CUT-R	0	STATIC	○	○	○	○	○	○
○		VOL0								
○		Color	1	SKEW	○	○	○	○	○	○
○		Tint	2	BOW	○	○	○	○	○	○
				4TH BOW	○		○		○	
○	○	Contrast	3	SUB KEY	○	○	○	○	○	○
○	○	Bright	4	KEY	○	○	○	○	○	○
				MID KEY		○		○		○
○	○	Sharpness	5	MS PIN	○	○	○	○	○	○
				SUB PIN	○		○		○	
				4S PIN	○		○		○	
				SC PIN		○		○		○
			6	PIN	○	○	○	○	○	○
				MID PIN	○	○	○	○	○	○
				4TH PIN	○	○	○	○	○	○
○		VOL20	7	LIN	○	○	○	○	○	○
				4TH LIN	○		○		○	
○		VOL30	8	SIZE	○	○	○	○	○	○
	○	DRV-G								
○		STEREO WIDE ON / OFF	9	SUB LIN	○	○	○	○	○	○
	○	DRV-B								

VR : Adjust GH, GV with semifixed VR

OFFSET → CH + : CUT-G
CONVER → CH – : CUT-B

(To output Red, Green and Blue separately)

TV : To output Red ON/OFF
LD : To output Green ON/OFF
VIDEO1 : To output Blue ON/OFF

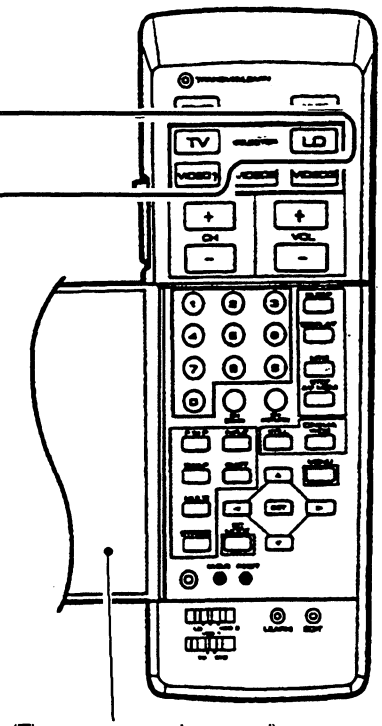

(The upper cover is opened)

■ Jigs and Measuring Instruments

Remote control unit AXD1429 (CU-SD103)	Remote control unit for servicing AXD1352 (CU-SD076)	⊖ Screwdriver	⊖ Adjustment screwdriver
Color bar generator	D. DC Voltmeter	LD Player	Monoscope
Dual-trace oscilloscope	Frequency counter		

■ Assembly Adjustment Location and Items

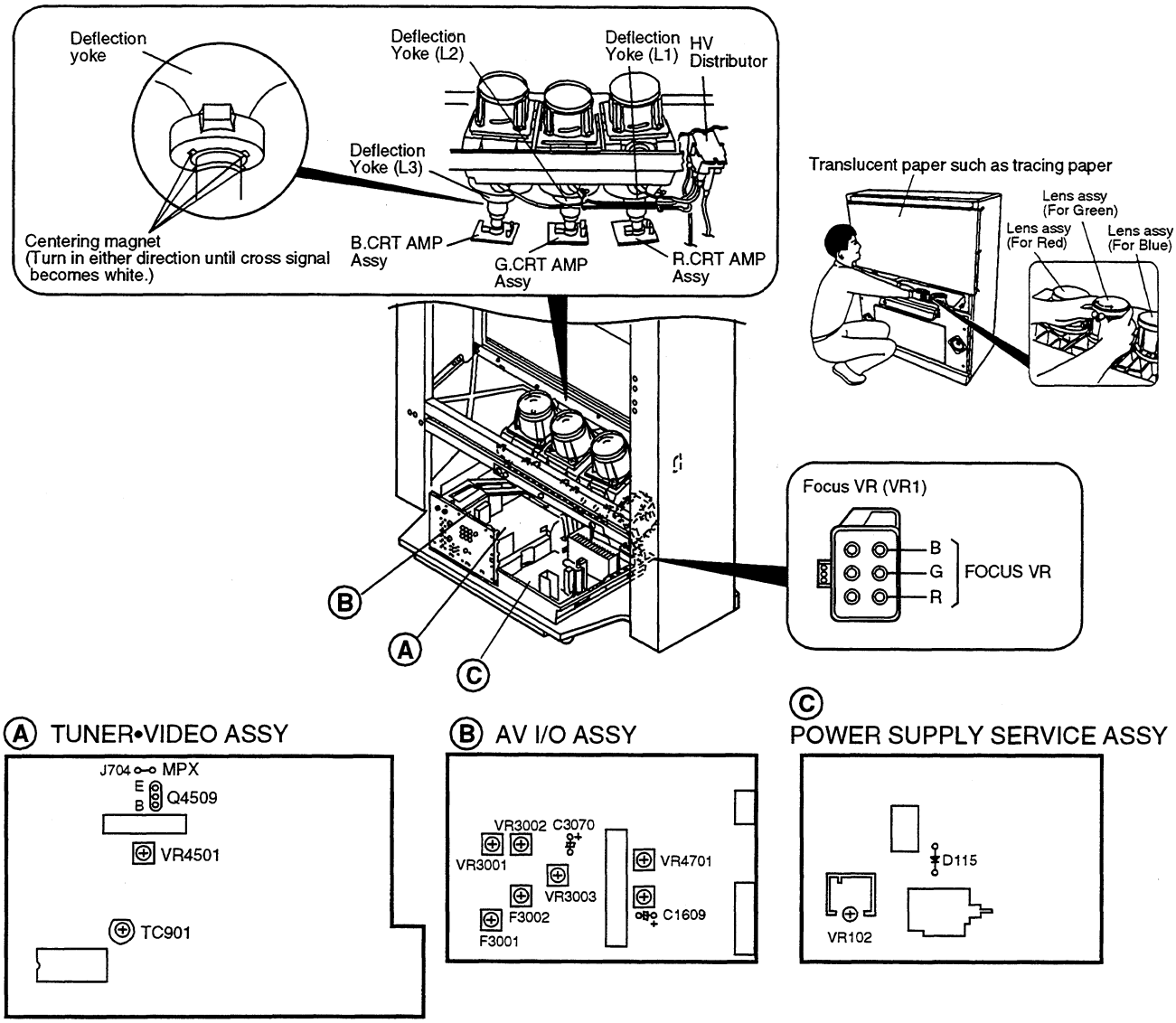

1. 135V Power Supply Adjustment
2. Contrast Coarse Adjustment
3. Brightness Adjustment (PIONEER's Standard Settings)
4. Deflection Yoke Lean Adjustment
5. Screen Center Adjustment
6. Focus Adjustment of Lens Assy
7. Focus VR Adjustment
8. Horizontal Size Adjustment
9. Vertical Size Adjustment
10. Convergence Adjustment
11. Test Cross H-Center Position Adjustment
12. Tuner Block Adjustment
13. White Balance Adjustment
14. PIONEER's Standard Settings
15. Y-signal Level Adjustment of Sub-picture (Adjustment for P IN P)
16. TINT Adjustment of Sub-picture (Adjustment for P IN P)
17. Chroma Level Adjustment of Sub-picture (Adjustment for P IN P)
18. Write Clock Adjustment of Sub-picture (Adjustment for P IN P)
19. Read Clock Adjustment of Sub-picture (Adjustment for P IN P)

■ Assembly Adjustment Location Guide

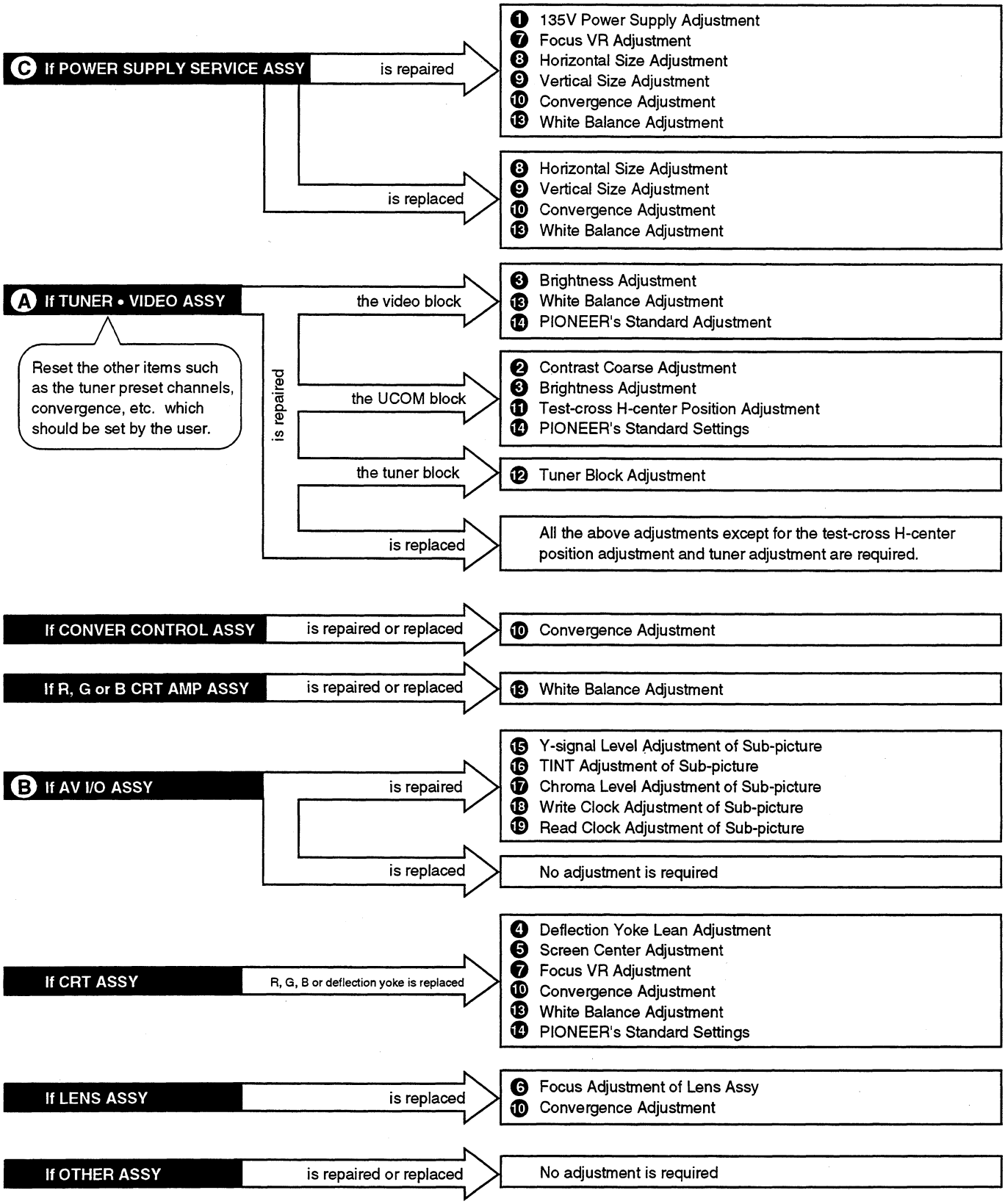

■ Factory Adjustment Mode

Start ..... Start adjusting

1st FAC ..... Select 1st FACTORY ADJ mode, then adjust.

Select 1st FACTORY ADJ Mode

Selecting the mode for adjustment operations.

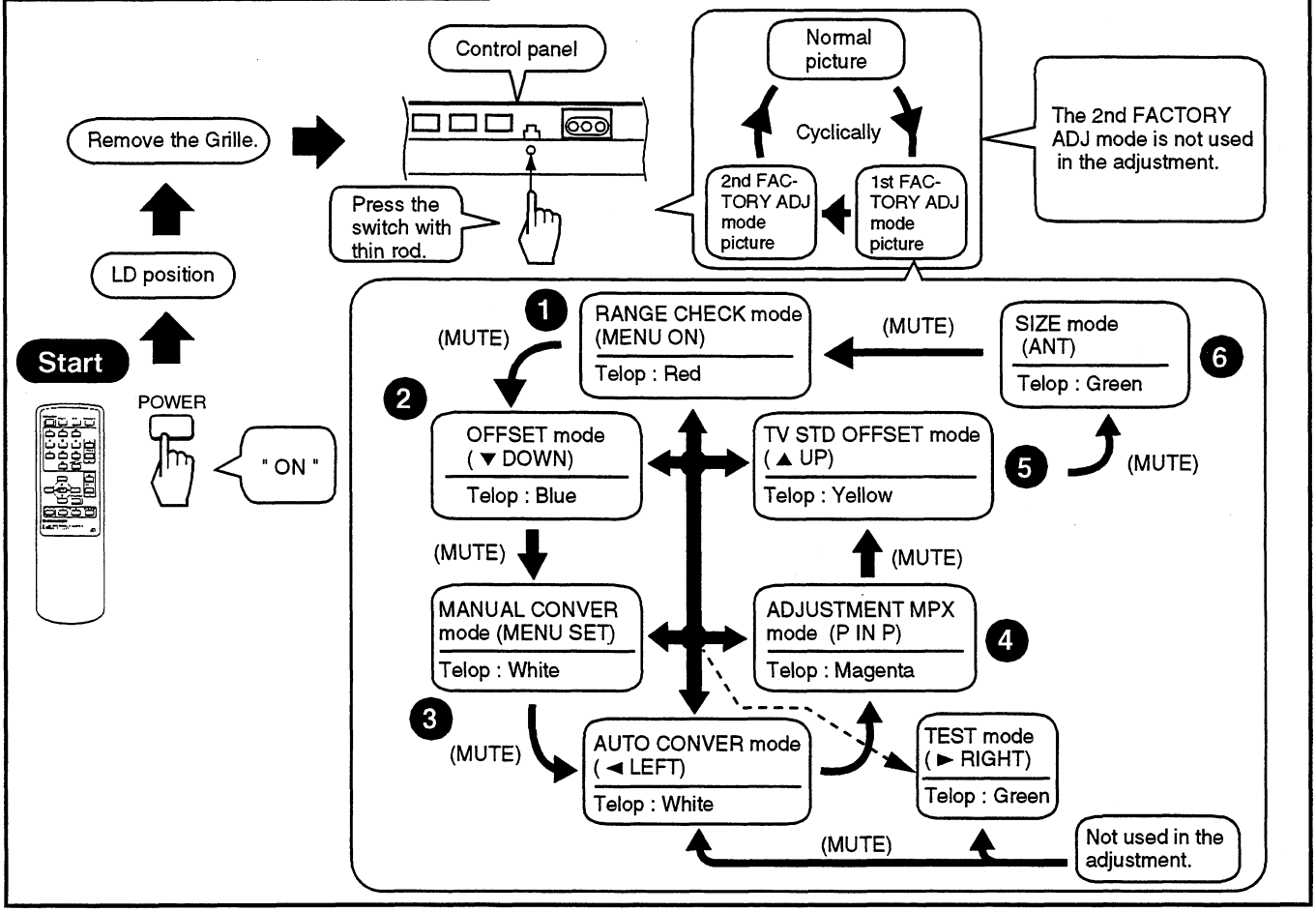

① Adjustment Range Mode

Picture quality, etc.. Change amount check made operating.

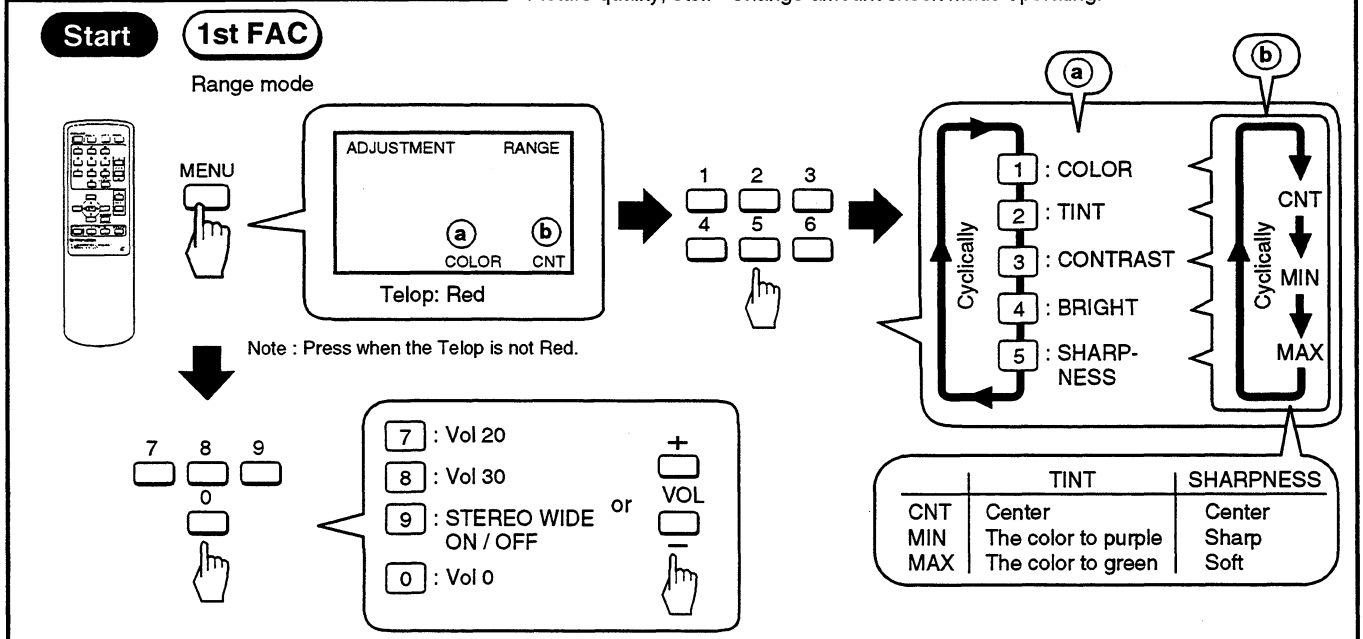

	TINT	SHARPNESS
CNT	Center	Center
MIN	The color to purple	Sharp
MAX	The color to green	Soft

❷ Adjustment OFFSET Mode

This mode is to set the standard picture quality for a normal picture.

Start → 1st FAC

(DOWN)

ADJUSTMENT OFFSET

Adjustment item

Telop: Blue — Data value

< Adjustment item section >

1 2 3 / 4 5 6 + / 7 8 9 CH / 0 –

0 : CVTR
1 : COLOR
2 : TINT
3 : CONTR
4 : BRITE
5 : SHARP
8 : DRV-G
9 : DRV-B
CH + : CUT-G
CH – : CUT-B

< Data value section >

+ VOL –

❸ Convergence Setting Mode

Start → 1st FAC

SET

ADJUSTMENT CONVERGE

Variety — Adjustment item — Data value

Telop: White

< Adjustment item section >

1 2 3 / 4 5 6 / 7 8 9 / 0

< Data value section >

+ VOL –

< Variety section >

+ CH –

GV (Green, Vertical) ↔ RH (Red, Horizontal)
↕ ↕
GH (Green, Horizontal) ↔ RV (Red, Vertical)
↕ ↕
BV (Blue Vertical) ↔ BH (Blue, Horizontal)

• GH, RH, BH

0 : STATIC
1 : SKEW
2 : BOW → 4TH BOW
3 : SUB KEY
4 : KEY
5 : SUB PIN → M S PIN → SUB PIN → 4 S PIN
6 : PIN → MID PIN → 4TH PIN
7 : LIN → 4TH LIN
8 : SIZE
9 : SUB LIN

• GV, RV, BV

0 : STATIC
1 : SKEW
2 : BOW
3 : SUB KEY
4 : KEY → MID KEY
5 : SUB PIN → S C PIN
6 : PIN → MID PIN → 4TH PIN
7 : LIN
8 : SIZE
9 : SUB LIN

④ Adjustment MPX Mode

For adjusting the TV tuner MPX decoder section

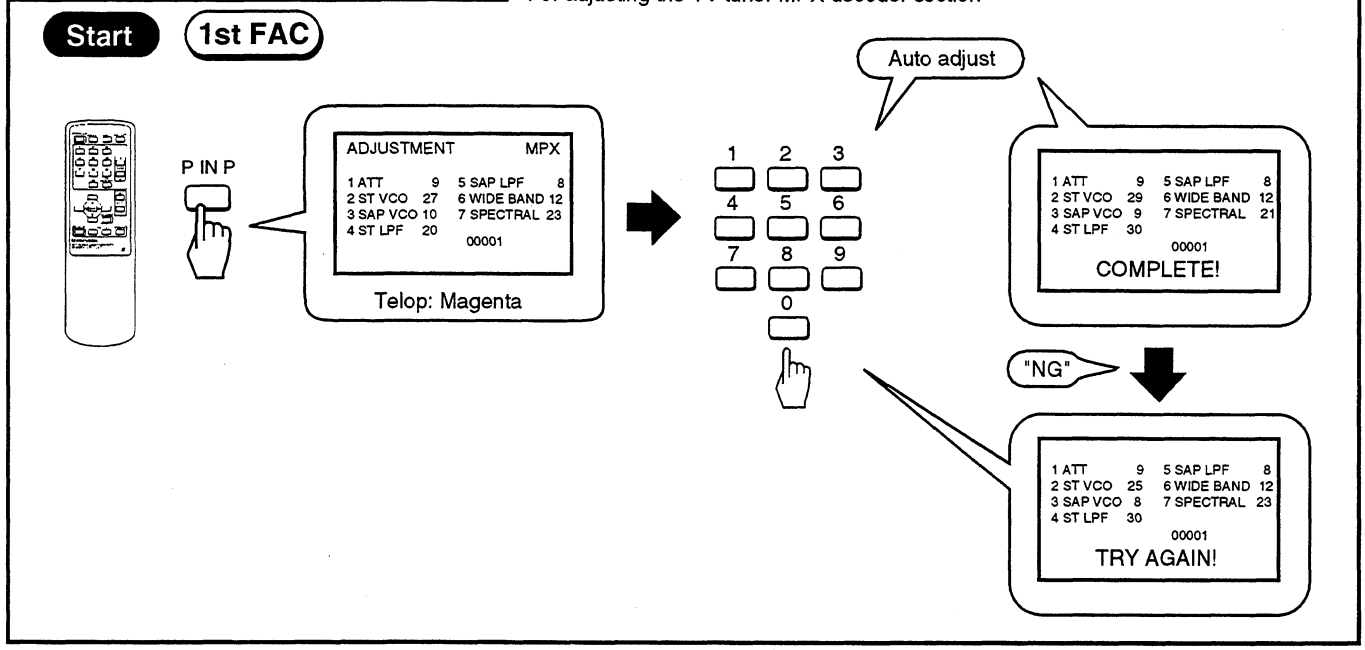

⑤ TV Standard Mode

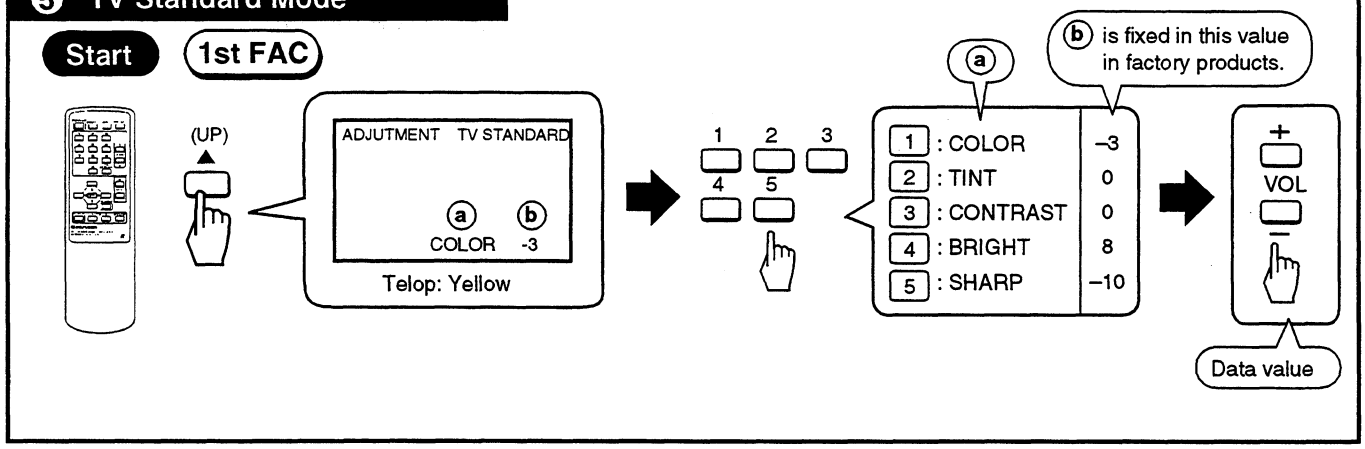

⑥ Adjustment SIZE Mode

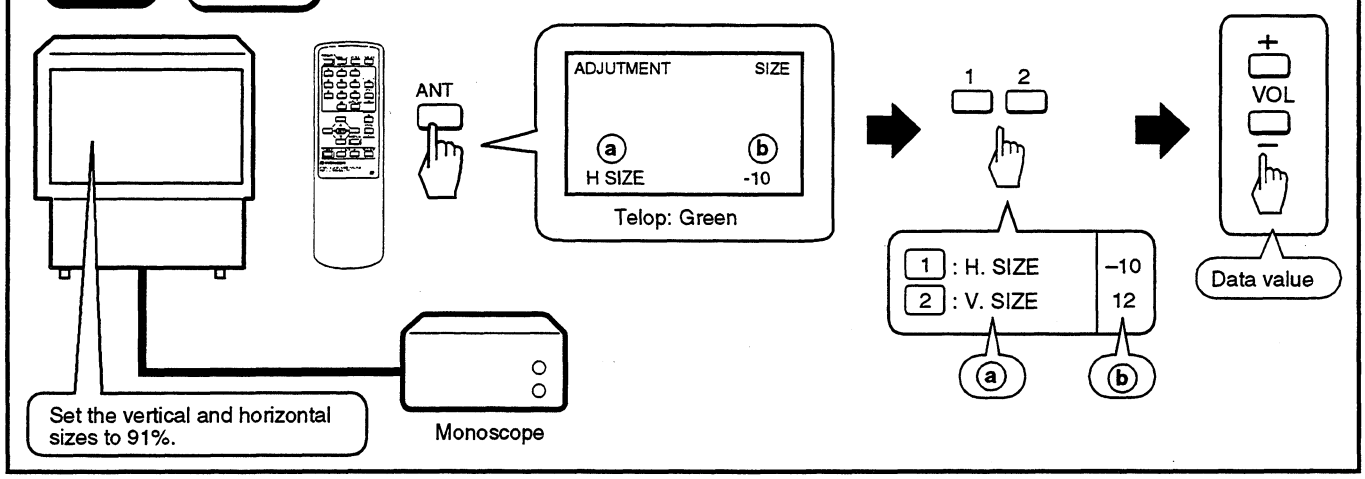

■ Assembly Adjustment

❶ 135V Power Supply Adjustment

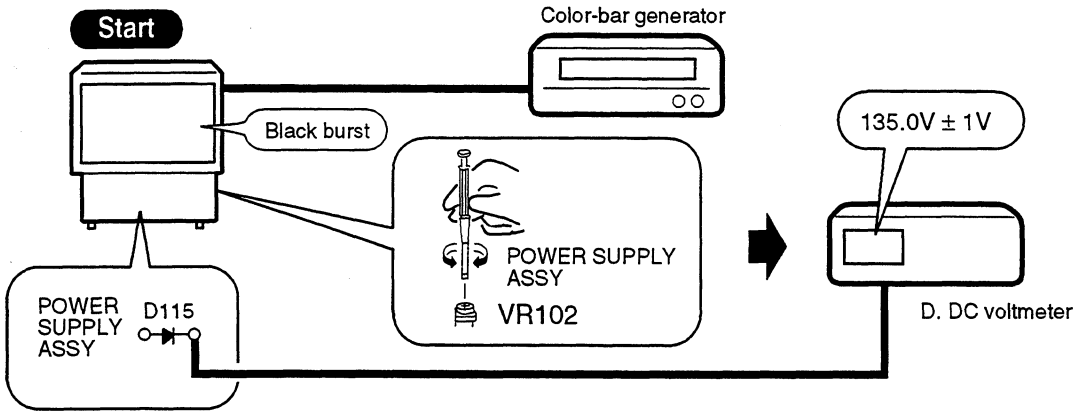

❷ Contrast Coarse Adjustment

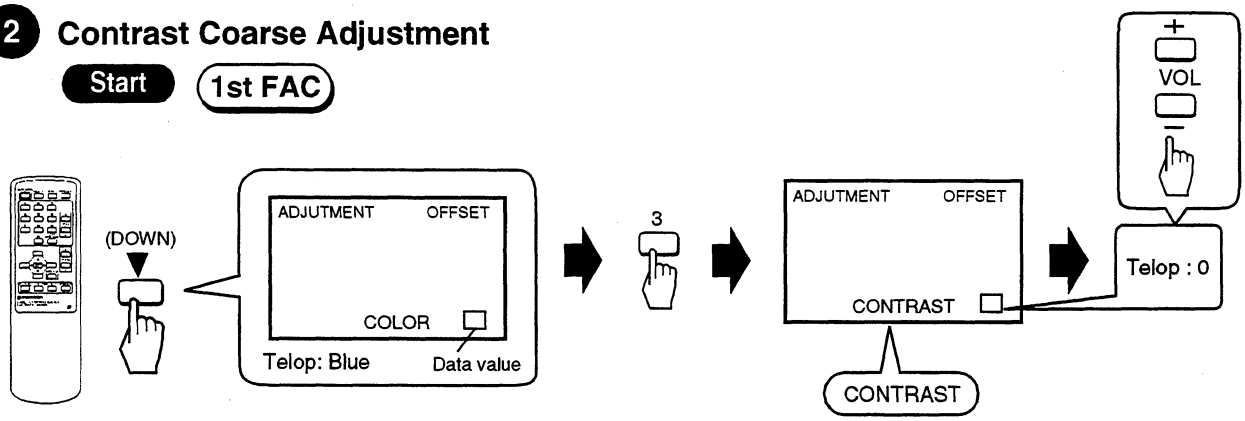

❸ Brightness Adjustment (PIONEER's Standard Setting)

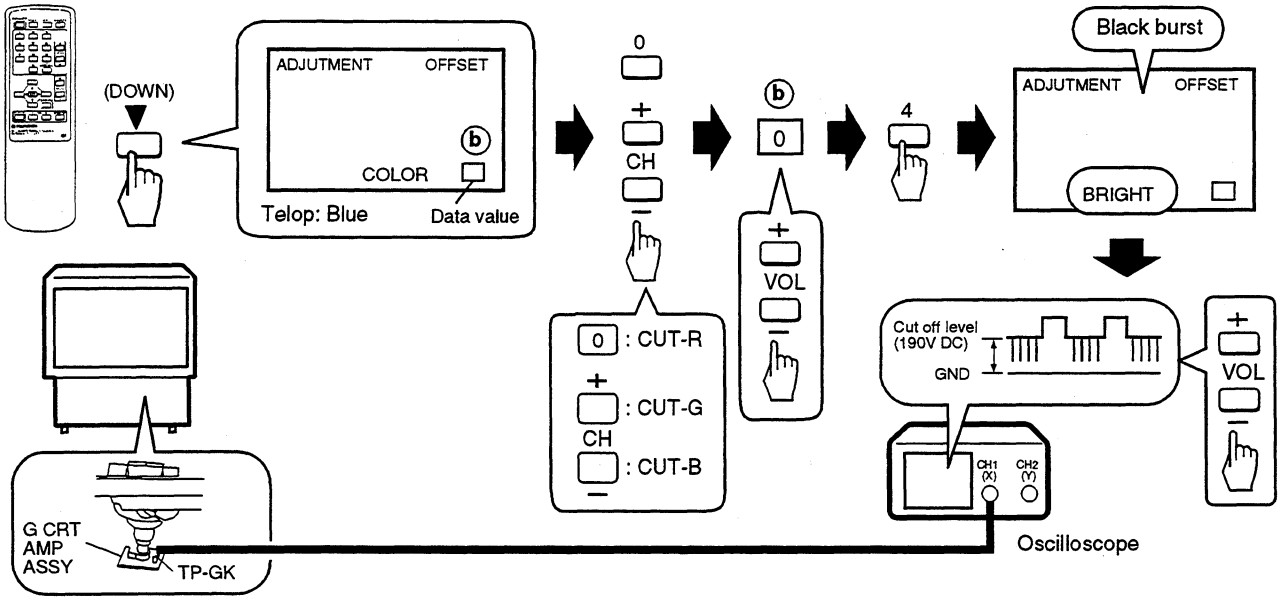

4 Deflection Yoke Lean Adjustment

Start

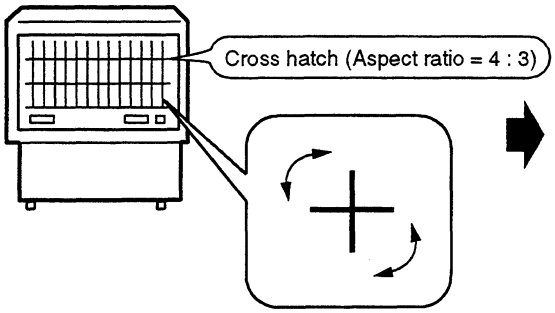

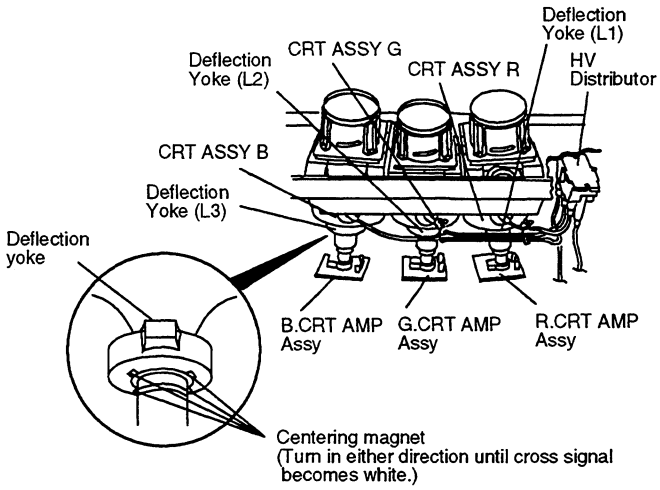

5 Screen Center Adjustment

Start

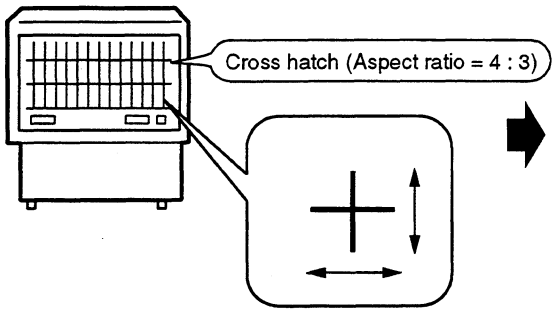

- For red or blue adjustment, turn 1st FACTORY ADJ mode ON and then OFF to place the convergence POSITION at the center of the adjustable range.
- Move the centering magnet of the deflection yoke for the replaced color so that the horizontal and vertical lines at the center of the screen align with the lines for a color not replaced.

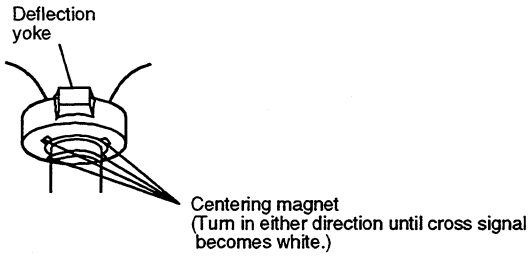

6 Focus Adjustment of Lens Assy

Start

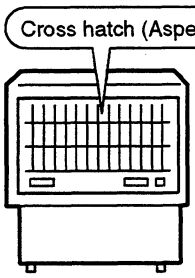

Remove the screen frame.

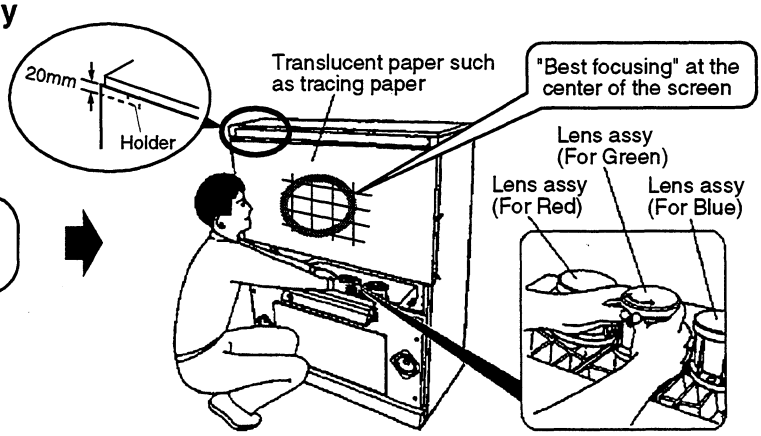

7 Focus VR Adjustment

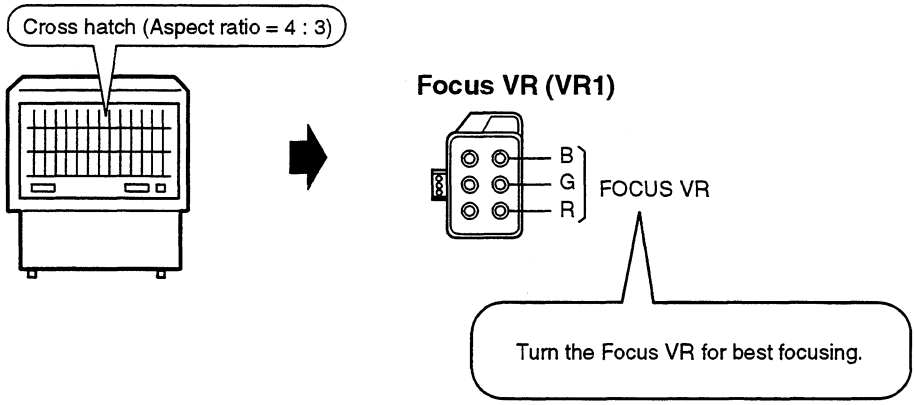

8 Horizontal Size Adjustment

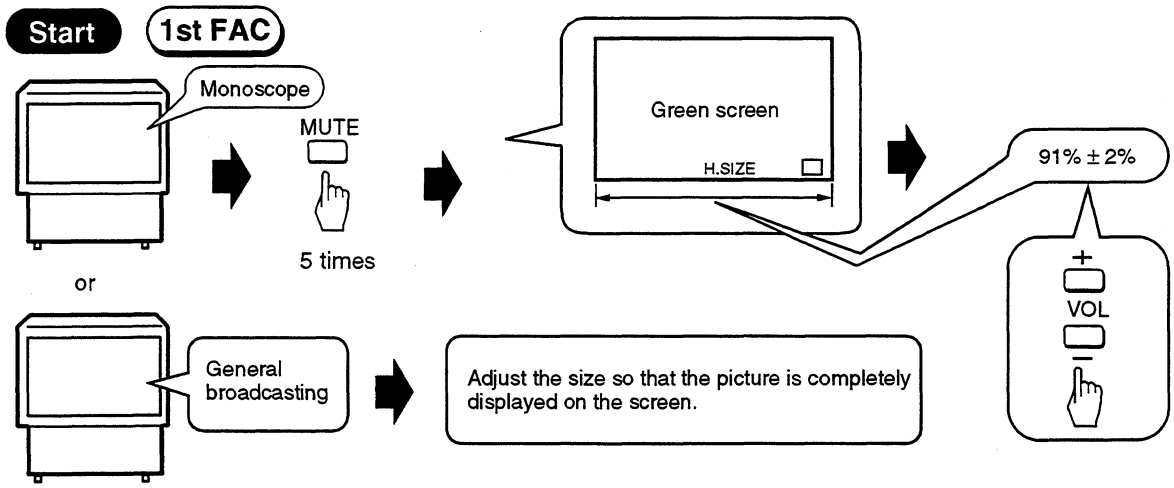

9 Vertical Size Adjustment

Note :
After the V. SIZE adjustment, enter the H. SIZE adjustment by pressing "1" key and readjust.

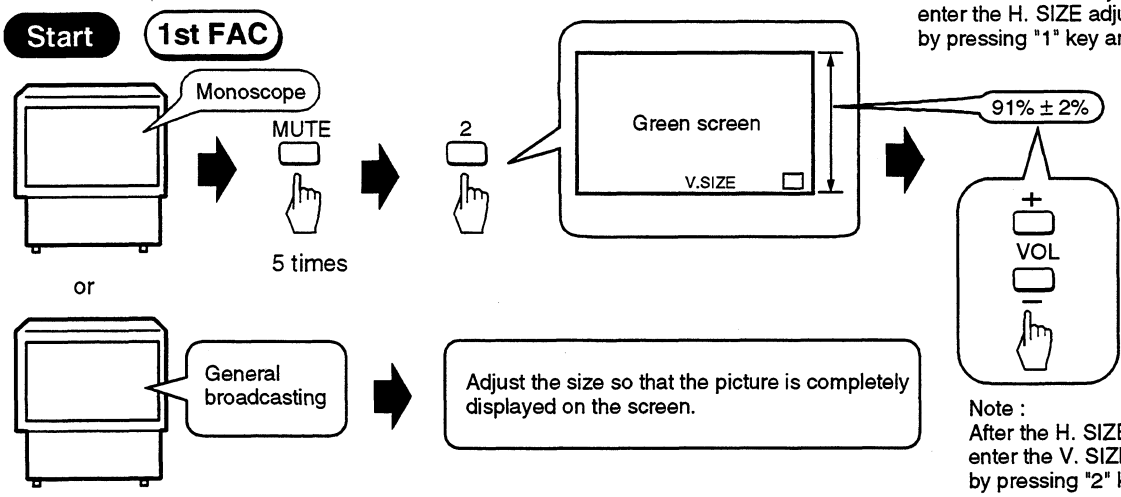

Note :
After the H. SIZE adjustment, enter the V. SIZE adjustment by pressing "2" key.

10 Convergence adjustment

10 -1 Green line adjustment (1st FAC)

- Adjustment in the horizontal direction

Start

- See ③ Convergence Setting Mode in the Factory Adjustment mode.
- Input cross-hatch signals to this device's video input terminal.

Note :
The convergence for this device must be adjusted for each screen size normal cinema and full cinema.

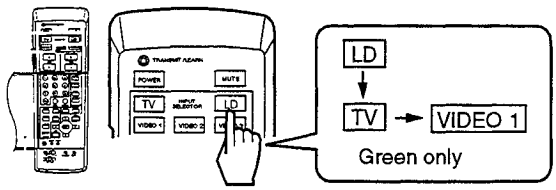

- Use the remote control unit CU-SD076 for servicing.

• Select the Adjustment item

GH - STATIC

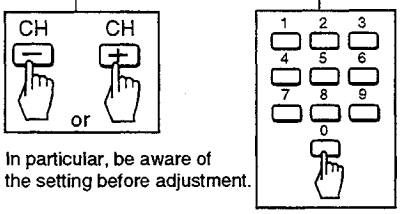

In particular, be aware of the setting before adjustment.

• Adjust the Data value

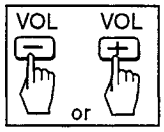

Note :
- Repeat the adjustments until you attain the optimum state.
- Fine-adjust over the entire picture to obtain the optimum picture.
- If the adjustment is not possible within the range of 010 to – 010, set the data value to 0, turn the centering magnet of the deflection yoke and fine-adjust H-STATIC.

Adjustment Item		Cross-hatch Picture: Deviated	Cross-hatch Picture: Optimum	Cross-hatch Picture: Deviated	Adjustment Point
Center-line Adjustment	GH - STATIC		Attention point		Move the center vertical line at the center of the screen.
	GH - SKEW		Attention point		Adjust so that the center vertical line is not leaned.
	GH - BOW		Attention point		Adjust so that the bowed center vertical line at the center of the screen to a straight line.
	GH - 4TH BOW		Attention point		Adjust so that the wavy center vertical line at the center of the screen to a straight line.
Line-interval Adjustment	GH - LIN		Attention point		Adjust so that the intervals of the vertical lines in the right and left sections of the screen are symmetrically and correct the size.
	GH - 4TH LIN		Attention point		
	GH - SIZE		Attention point		
	GH - SUB LIN		Attention point		

Note : ▷——◁ : Line which does not move at all c▷——◁c' : Center vertical line ▶——◀ : Line which hardly moves
▷- - - -◁ : Line which does not move out of the screen

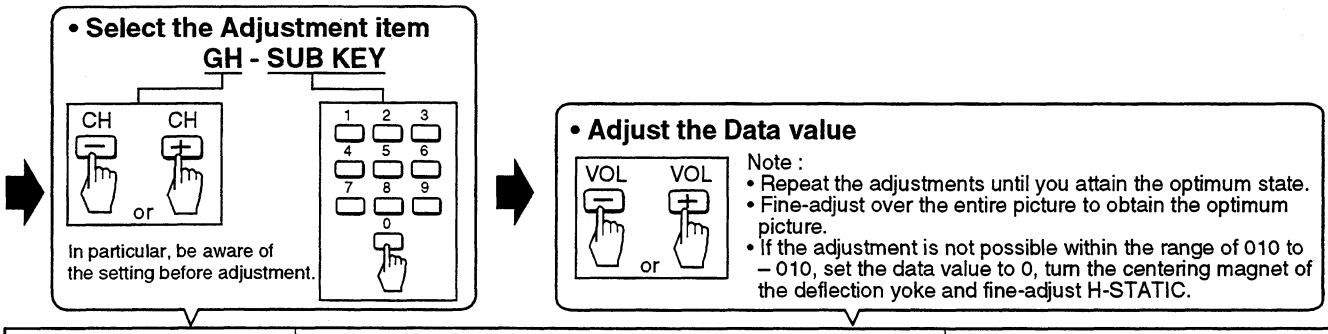

Adjustment Item		Cross-hatch Picture: Deviated	Cross-hatch Picture: Optimum	Cross-hatch Picture: Deviated	Adjustment Point
Lean Adjustment	GH - SUB KEY		Attention point		Adjust so that the vertical lines in the right and left sections of the screen are not leaned.
	GH - KEY		Attention point		
	GH - SUB PIN		Attention point		Adjust so that the vertical lines in the right and left sections of the screen are not distorted and are straight.
	GH - M S PIN		Attention point		
	GH - 4S PIN		Attention point		

10 -2 Green line adjustment (1st FAC)

- Adjustment in the vertical direction

Start

• Select the Adjustment item

GV - STATIC

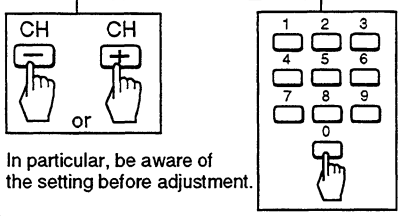

In particular, be aware of the setting before adjustment.

• Adjust the Data value

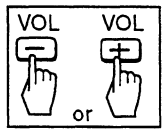

Note :
- Repeat the adjustments until you attain the optimum state.
- Fine-adjust over the entire picture to obtain the optimum picture.
- If the adjustment is not possible within the range of 010 to – 010, set the data value to 0, turn the centering magnet of the deflection yoke and fine-adjust V-STATIC.

Adjustment Item		Cross-hatch Picture: Deviated	Cross-hatch Picture: Optimum	Cross-hatch Picture: Deviated	Adjustment Point
Center-line Adjustment	GV - STATIC		Attention point		Move the center horizontal line at the center of the screen.
	GV - SKEW		Attention point		Adjust so that the center horizontal line is not leaned.
	GV - BOW		Attention point		Adjust so that the bowed center horizontal line at the center of the screen to a straight line.
Line-interval Adjustment	GV - LIN		Attention point, c', Attention point		Adjust so that the intervals of the horizontal lines in the upper and lower sections of the screen are symmetrically and correct the size.
	GV - SIZE		Attention point, c', Attention point		
	GV - SUB LIN		Attention point, c', Attention point		

Note : ▷——◁ : Line which does not move at all c▷——◁c' : Center horizontal line ►——◄ : Line which hardly moves
▷- - - -◁ : Line which does not move out of the screen

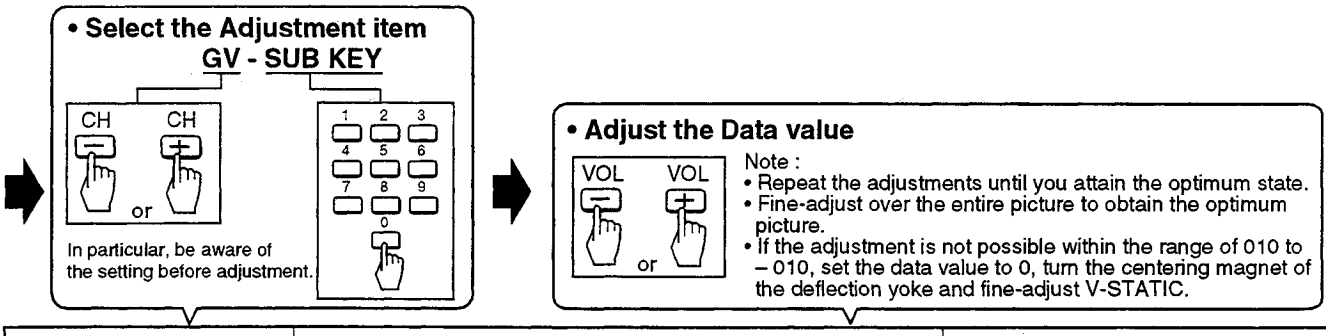

Adjustment Item		Cross-hatch Picture: Deviated	Cross-hatch Picture: Optimum	Cross-hatch Picture: Deviated	Adjustment Point
Lean Adjustment	GV - SUB KEY		Attention point, c, c', Attention point		Adjust so that the horizontal lines in the upper and lower sections of the screen are not leaned.
	GV - KEY		Attention point, c, c', Attention point		
	GV - MID KEY		Attention point, c, c', Attention point		
Distortion Adjustment	GV - SUB PIN		Attention point, c, c', Attention point		Adjust so that the horizontal lines in the upper and lower sections of the screen are not distorted and are straight.
	GV - SC PIN		Attention point, c, c', Attention point		
	GV - PIN		Attention point, c, c', Attention point		
	GV - MID PIN		Attention point, c, c', Attention point		
	GV - 4TH PIN		Attention point, c, c', Attention point		

Note : ▷——◁ : Line which does not move c▷——◁c' : Center vertical line

10 -3 Red line adjustment (1st FAC)

- Adjustment in the horizontal direction

Start

- See ③ Convergence Setting Mode in the Factory Adjustment mode.
- Input cross-hatch signals to this device's video input terminal.

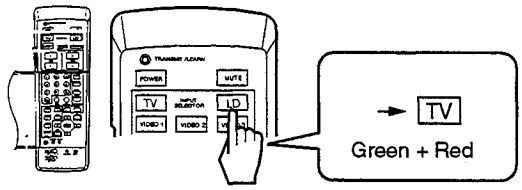

- Use the remote control unit CU-SD076 for servicing.

• Select the Adjustment item
RH - STATIC

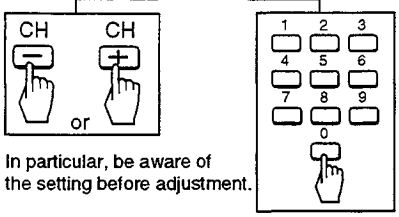

In particular, be aware of the setting before adjustment.

• Adjust the Data value

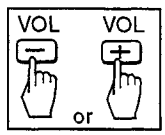

Note :
- Repeat the adjustments until you attain the optimum state.
- Fine-adjust over the entire picture to obtain the optimum picture.
- If the adjustment is not possible within the range of 010 to – 010, set the data value to 0, turn the centering magnet of the deflection yoke and fine-adjust H-STATIC.

	Adjustment Item	Cross-hatch Picture: Deviated	Cross-hatch Picture: Optimum	Cross-hatch Picture: Deviated	Adjustment Point
Center-line Adjustment	RH - STATIC		Attention point		Converge the center vertical line in the green vertical line.
	RH - SKEW		Attention point		Adjust so that the center vertical line is not leaned.
	RH - BOW		Attention point		Adjust so that the bowed center vertical line at the center of the screen to a straight line.
	RH - 4TH BOW		Attention point		Adjust so that the wavy center vertical line at the center of the screen to a straight line.
Line-interval Adjustment	RH - LIN		Attention point		Adjust so that the intervals of the vertical lines in the right and left sections of the screen are symmetrically and converge them in the green vertical lines.
	RH - 4TH LIN		Attention point		
	RH - SIZE		Attention point		
	RH - SUB LIN		Attention point		

Note : ▷——◁ : Line which does not move at all C▷——◁C' : Center vertical line ▶——◀ : Line which hardly moves
▷- - - -◁ : Line which does not move out of the screen

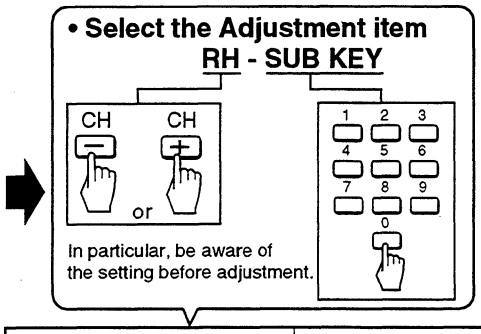

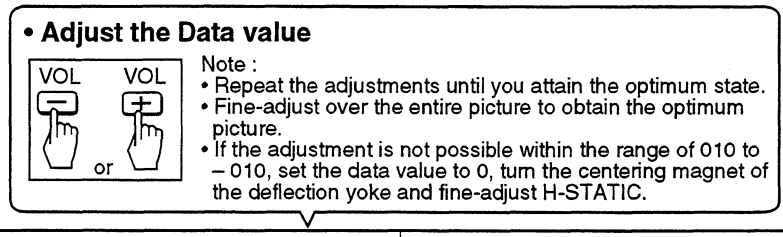

Adjustment Item		Cross-hatch Picture: Deviated	Cross-hatch Picture: Optimum	Cross-hatch Picture: Deviated	Adjustment Point
Lean Adjustment	RH - SUB KEY		Attention point		Adjust so that the vertical lines in the right and left sections of the screen are not leaned.
	RH - KEY		Attention point		
Distortion Adjustment	RH - SUB PIN		Attention point		Adjust so that the vertical lines in the right and left sections of the screen are not distorted and are straight.
	RH - M S PIN		Attention point		
	RH - 4S PIN		Attention point		
	RH - PIN		Attention point		
	RH - MID PIN		Attention point		
	RH - 4TH PIN		Attention point		

Note : ▷——◁ : Line which does not move c▷——◁c' : Center vertical line

10 -4 Red line adjustment (1st FAC)

- Adjustment in the vertical direction

Start

• Select the Adjustment item

RV - STATIC

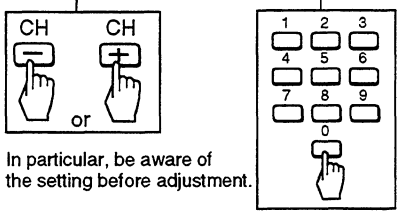

In particular, be aware of the setting before adjustment.

• Adjust the Data value

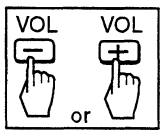

Note :
- Repeat the adjustments until you attain the optimum state.
- Fine-adjust over the entire picture to obtain the optimum picture.
- If the adjustment is not possible within the range of 010 to – 010, set the data value to 0, turn the centering magnet of the deflection yoke and fine-adjust V-STATIC.

Adjustment Item		Cross-hatch Picture: Deviated	Cross-hatch Picture: Optimum	Cross-hatch Picture: Deviated	Adjustment Point
Center-line Adjustment	RV - STATIC		Attention point		Converge the center horizontal line in the green horizontal line.
	RV - SKEW		Attention point		Adjust so that the center horizontal line is not leaned.
	RV - BOW		Attention point		Adjust so that the bowed center horizontal line at the center of the screen to a straight line.
Line-interval Adjustment	RV - LIN		Attention point, Attention point		Adjust so that the intervals of the horizontal lines in the upper and lower sections of the screen are symmetrically and converge them in the green horizontal lines.
	RV - SIZE		Attention point, Attention point		
	RV - SUB LIN		Attention point, Attention point		

Note : ▷——◁ : Line which does not move at all c▷——◁c' : Center horizontal line ►——◄ : Line which hardly moves
▷-----◁ : Line which does not move out of the screen

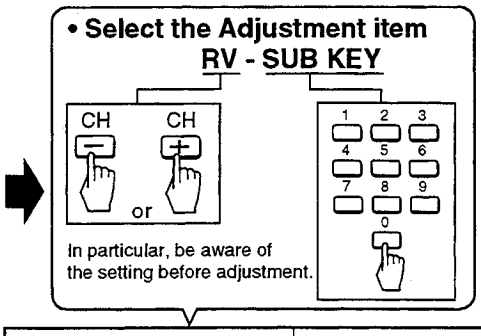

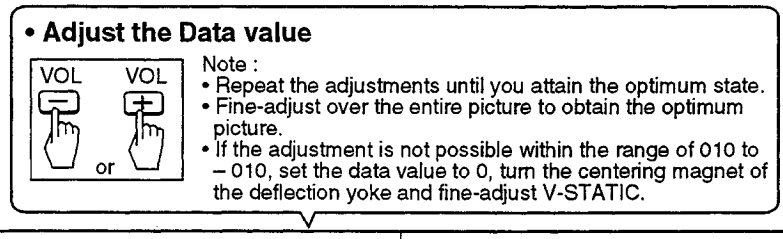

Adjustment Item		Cross-hatch Picture: Deviated	Cross-hatch Picture: Optimum	Cross-hatch Picture: Deviated	Adjustment Point
Lean Adjustment	RV - SUB KEY		Attention point / Attention point		Adjust so that the horizontal lines in the upper and lower sections of the screen are not leaned.
	RV - KEY		Attention point / Attention point		
	RV - MID KEY		Attention point / Attention point		
Distortion Adjustment	RV - SUB PIN		Attention point / Attention point		Adjust so that the horizontal lines in the upper and lower sections of the screen are not distorted and are straight.
	RV - SC PIN		Attention point / Attention point		
	RV - PIN		Attention point / Attention point		
	RV - MID PIN		Attention point / Attention point		
	RV - 4TH PIN		Attention point / Attention point		

Note : ▷——◁ : Line which does not move c▷——◁c' : Center vertical line

10 -5 Blue line adjustment (1st FAC)

- Adjustment in the horizontal direction

Start

- See ③ Convergence Setting Mode in the Factory Adjustment mode.
- Input cross-hatch signals to this device's video input terminal.

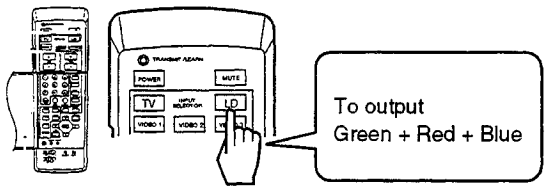

- Use the remote control unit CU-SD076 for servicing.

• Select the Adjustment item

BH - STATIC

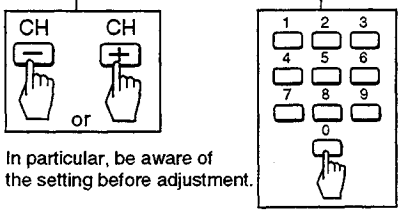

In particular, be aware of the setting before adjustment.

• Adjust the Data value

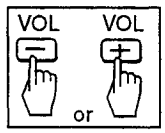

Note :
- Repeat the adjustments until you attain the optimum state.
- Fine-adjust over the entire picture to obtain the optimum picture.
- If the adjustment is not possible within the range of 010 to – 010, set the data value to 0, turn the centering magnet of the deflection yoke and fine-adjust H-STATIC.

	Adjustment Item	Cross-hatch Picture: Deviated	Cross-hatch Picture: Optimum	Cross-hatch Picture: Deviated	Adjustment Point
Center-line Adjustment	BH - STATIC		Attention point		Converge the center vertical line in the green vertical line.
	BH - SKEW		Attention point		Adjust so that the center vertical line is not leaned.
	BH - BOW		Attention point		Adjust so that the bowed center vertical line at the center of the screen to a straight line.
	BH - 4TH BOW		Attention point		Adjust so that the wavy center vertical line at the center of the screen to a straight line.
Line-interval Adjustment	BH - LIN		Attention point		Adjust so that the intervals of the vertical lines in the right and left sections of the screen are symmetrically and converge them in the green vertical lines.
	BH - 4TH LIN		Attention point		
	BH - SIZE		Attention point		
	BH - SUB LIN		Attention point		

Note : ▷——◁ : Line which does not move at all c▷——◁c' : Center vertical line ►——◄ : Line which hardly moves
▷- - - -◁ : Line which does not move out of the screen

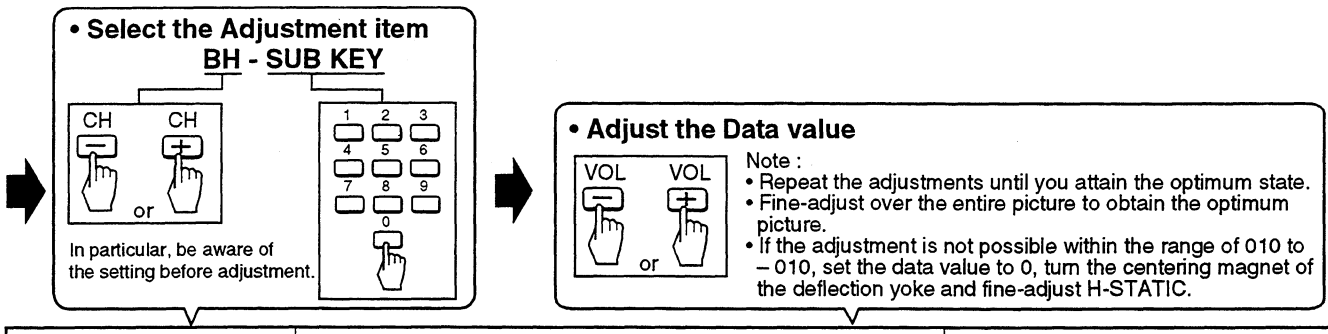

Adjustment Item		Cross-hatch Picture: Deviated	Cross-hatch Picture: Optimum	Cross-hatch Picture: Deviated	Adjustment Point
Lean Adjustment	BH - SUB KEY		Attention point		Adjust so that the vertical lines in the right and left sections of the screen are not leaned.
	BH - KEY		Attention point		
Distortion Adjustment	BH - SUB PIN		Attention point		Adjust so that the vertical lines in the right and left sections of the screen are not distorted and are straight.
	BH - M S PIN		Attention point		
	BH - 4S PIN		Attention point		
	BH - PIN		Attention point		
	BH - MID PIN		Attention point		
	BH - 4TH PIN		Attention point		

Note : ▷——◁ : Line which does not move c▷——◁c' : Center vertical line

10 -6 Blue line adjustment (1st FAC)

- Adjustment in the vertical direction

Start

• Select the Adjustment item
BV - STATIC

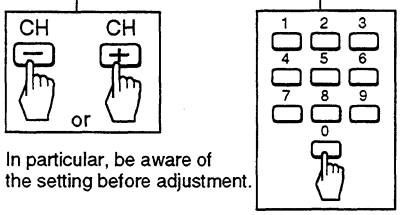

In particular, be aware of the setting before adjustment.

• Adjust the Data value

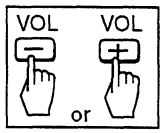

Note :
- Repeat the adjustments until you attain the optimum state.
- Fine-adjust over the entire picture to obtain the optimum picture.
- If the adjustment is not possible within the range of 010 to – 010, set the data value to 0, turn the centering magnet of the deflection yoke and fine-adjust V-STATIC.

Adjustment Item		Cross-hatch Picture: Deviated	Cross-hatch Picture: Optimum	Cross-hatch Picture: Deviated	Adjustment Point
Center-line Adjustment	BV - STATIC		Attention point		Converge the center horizontal line in the green horizontal line.
	BV - SKEW		Attention point		Adjust so that the center horizontal line is not leaned.
	BV - BOW		Attention point		Adjust so that the bowed center horizontal line at the center of the screen to a straight line.
Line-interval Adjustment	BV - LIN		Attention point / Attention point		Adjust so that the intervals of the horizontal lines in the upper and lower sections of the screen are symmetrically and converge them in the green horizontal lines.
	BV - SIZE		Attention point / Attention point		
	BV - SUB LIN		Attention point / Attention point		

Note : ▷——◁ : Line which does not move at all C▷——◁C' : Center horizontal line ▶——◀ : Line which hardly moves
▷- - - -◁ : Line which does not move out of the screen

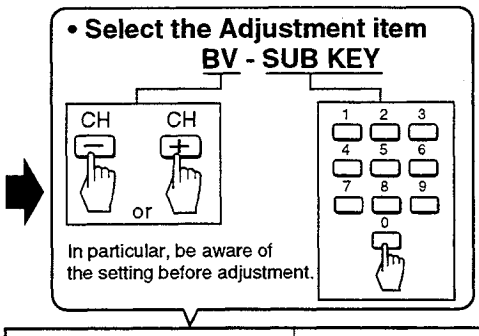

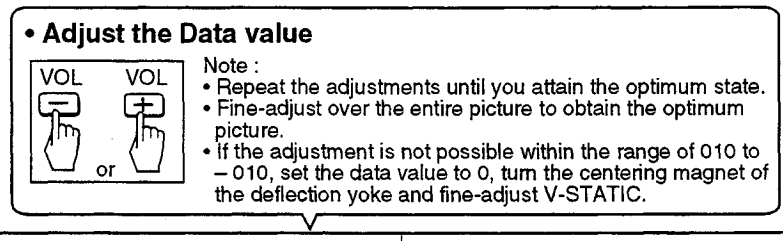

Adjustment Item		Cross-hatch Picture: Deviated	Cross-hatch Picture: Optimum	Cross-hatch Picture: Deviated	Adjustment Point
Lean Adjustment	BV - SUB KEY		Attention point / Attention point		Adjust so that the horizontal lines in the upper and lower sections of the screen are not leaned.
	BV - KEY		Attention point / Attention point		
	BV - MID KEY		Attention point / Attention point		
Distortion Adjustment	BV - SUB PIN		Attention point / Attention point		Adjust so that the horizontal lines in the upper and lower sections of the screen are not distorted and are straight.
	BV - SC PIN		Attention point / Attention point		
	BV - PIN		Attention point / Attention point		
	BV - MID PIN		Attention point / Attention point		
	BV - 4TH PIN		Attention point / Attention point		

Note : ▷——◁ : Line which does not move C▷——◁C' : Center vertical line

11 Test Cross H-center Position Adjustment

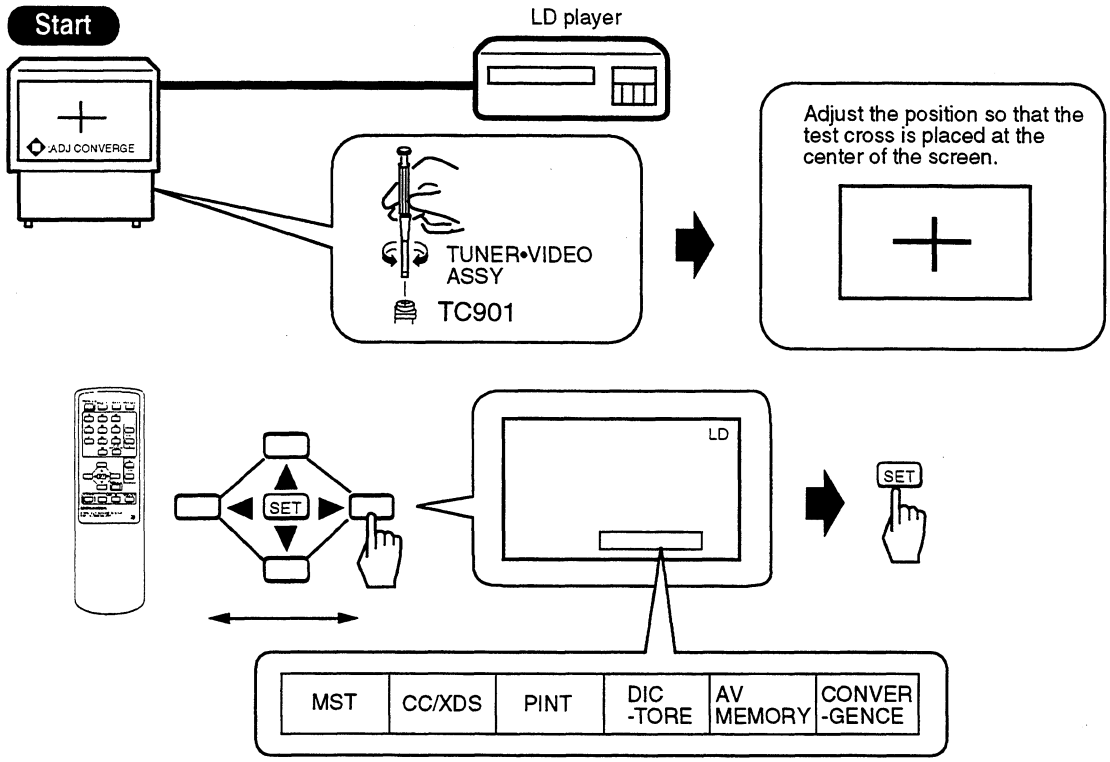

12 Tuner Block Adjustment

12-1 Video Level Adjustment ①

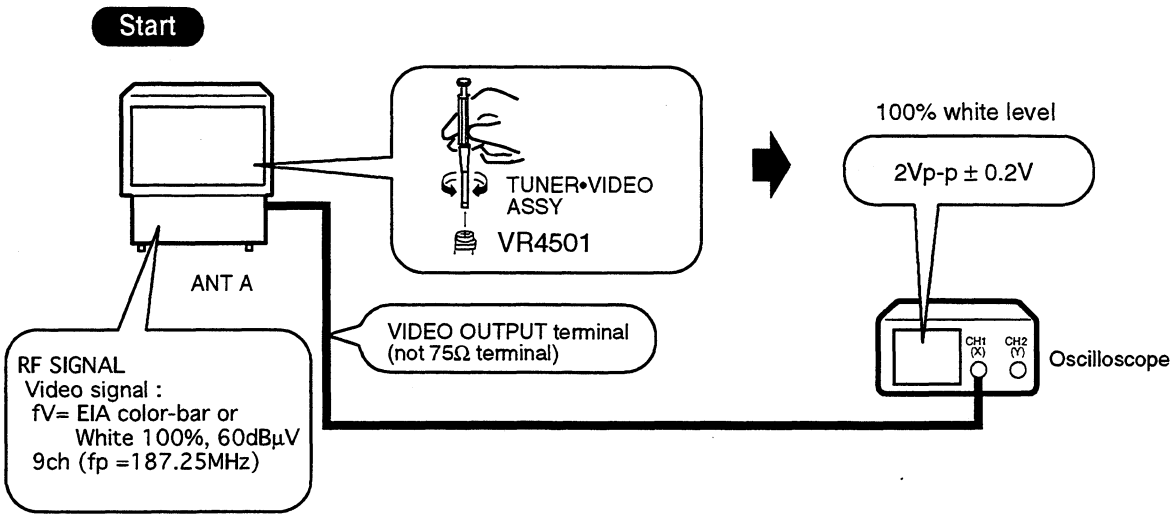

12 -2 Video Level Adjustment ②

Start

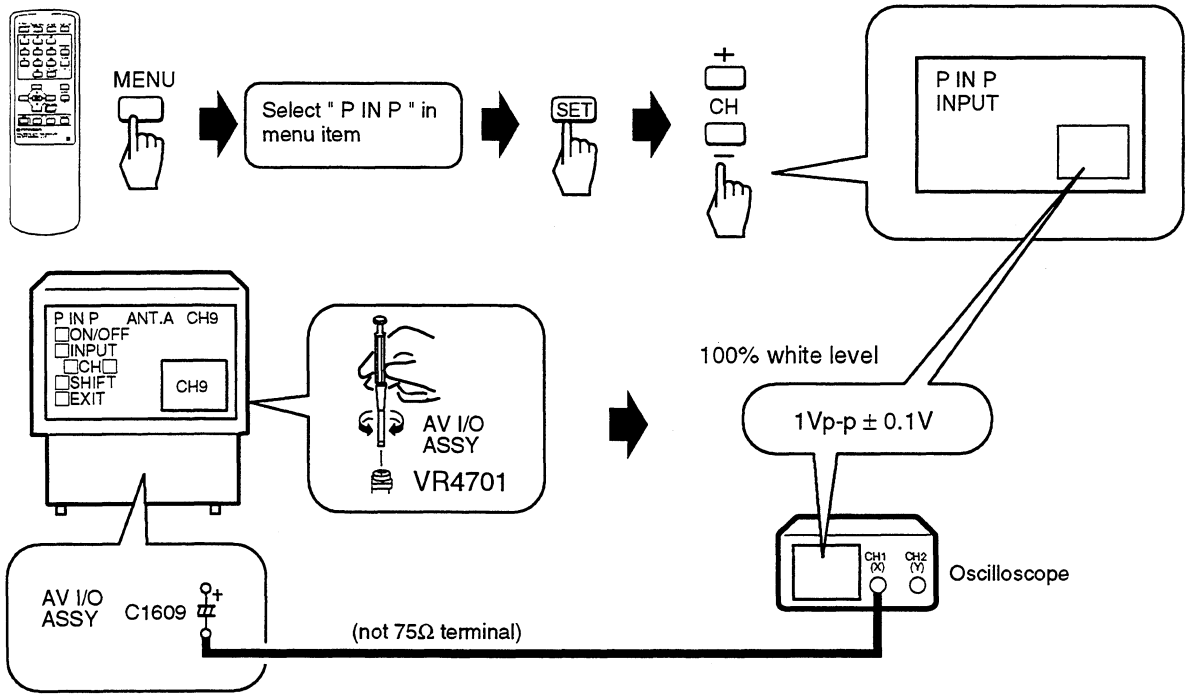

12 -3 Stereo VCO Adjustment

Start 1st FAC

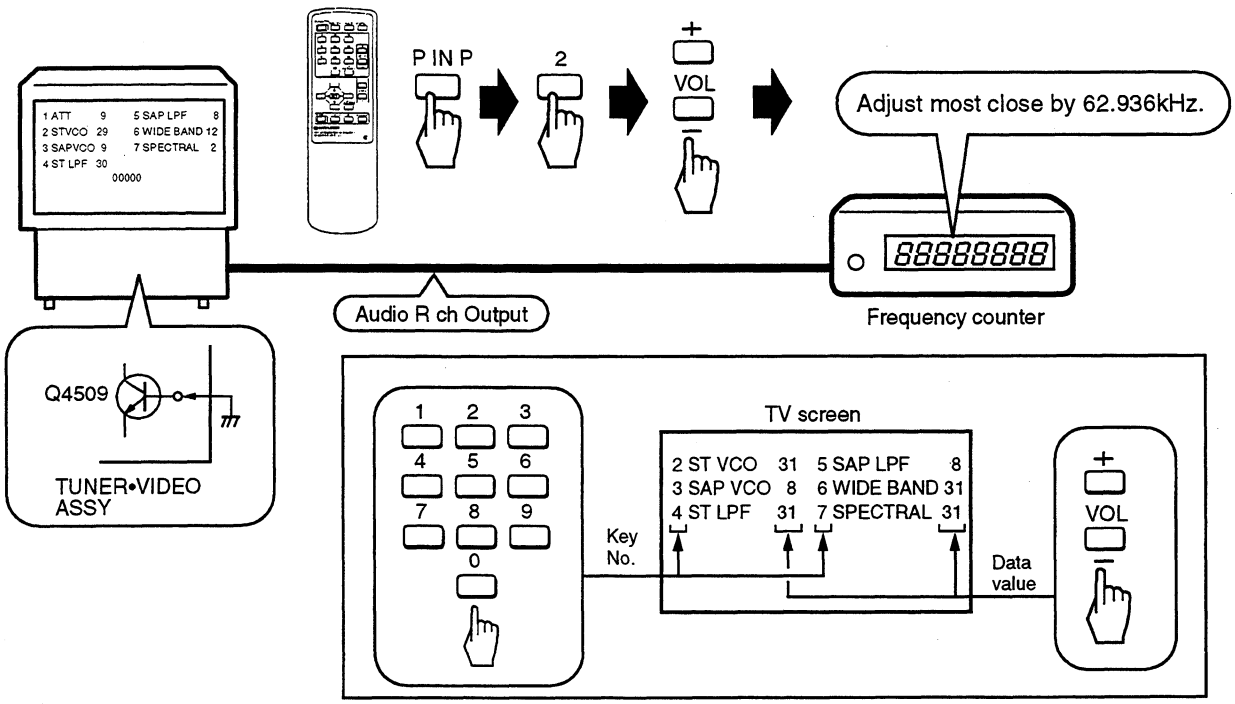

12 -4 SAP VCO Adjustment

Note : • Perform this adjustment after the ⑫ -3 adjustment.

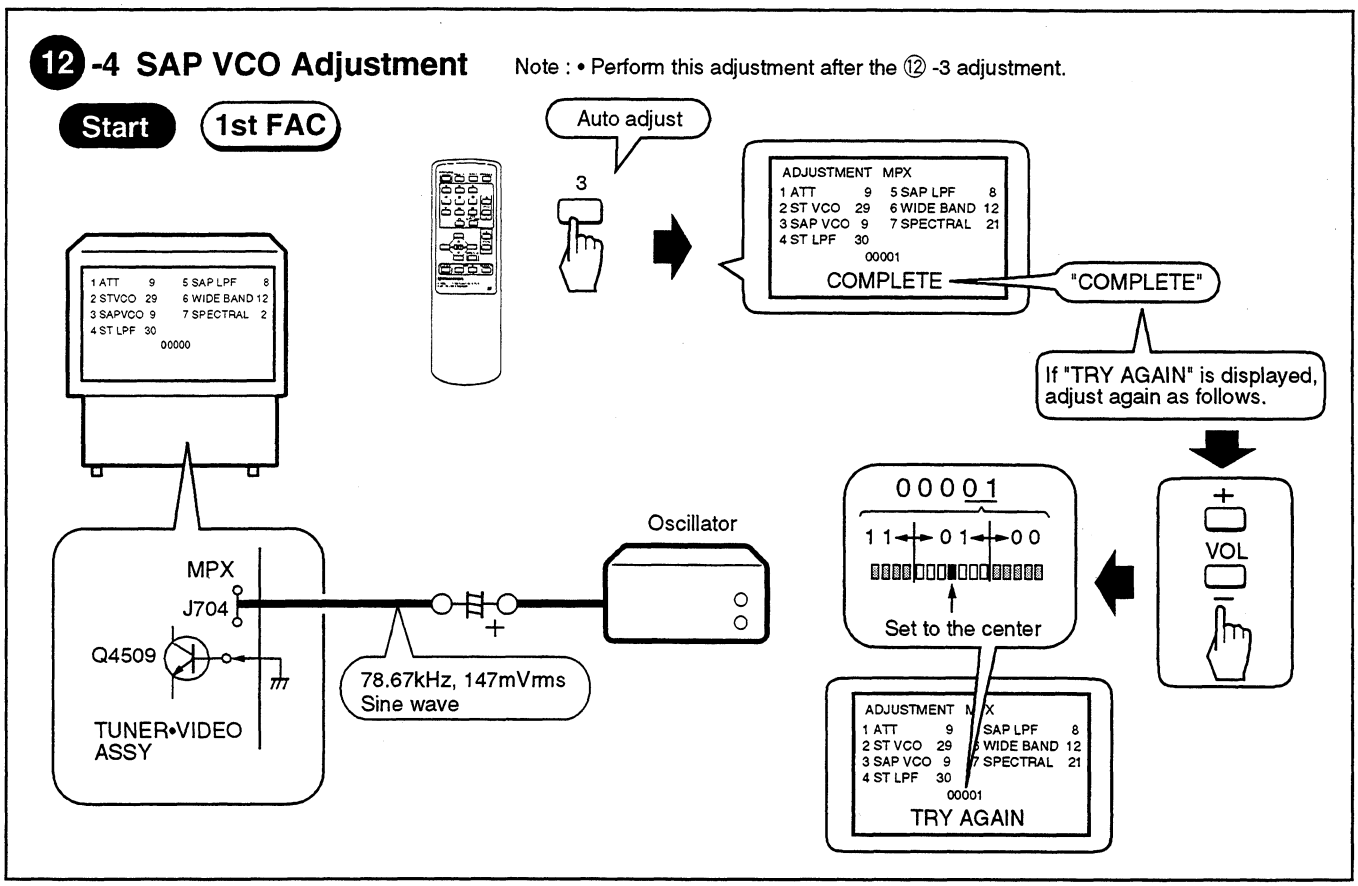

12 -5 STEREO LPF Adjustment

Note : • Perform this adjustment after the ⑫ -4 adjustment.

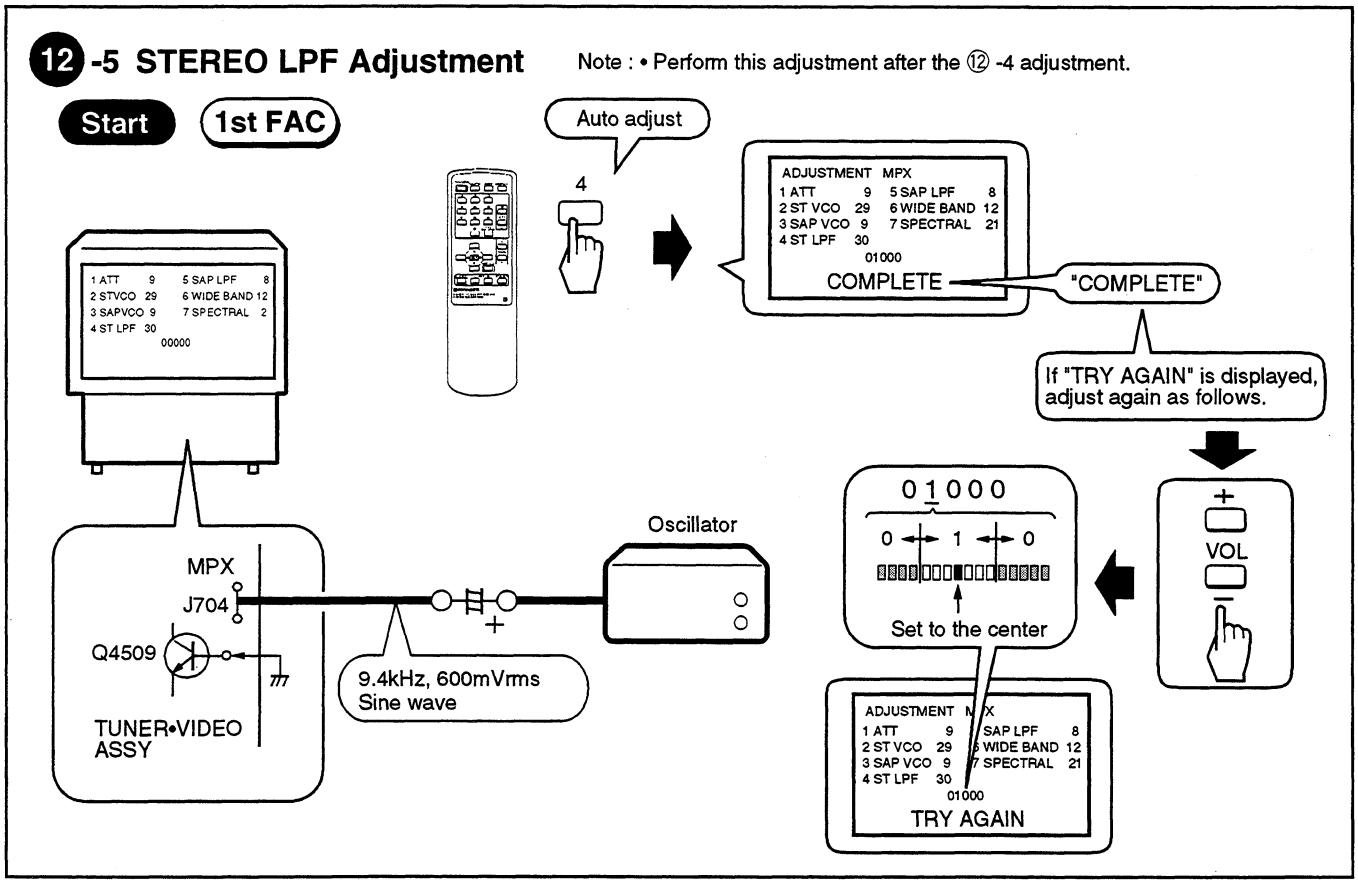

⑫-6 SAP LPF Adjustment

Note : • Perform this adjustment after the ⑫ -5 adjustment.

Start 1st FAC

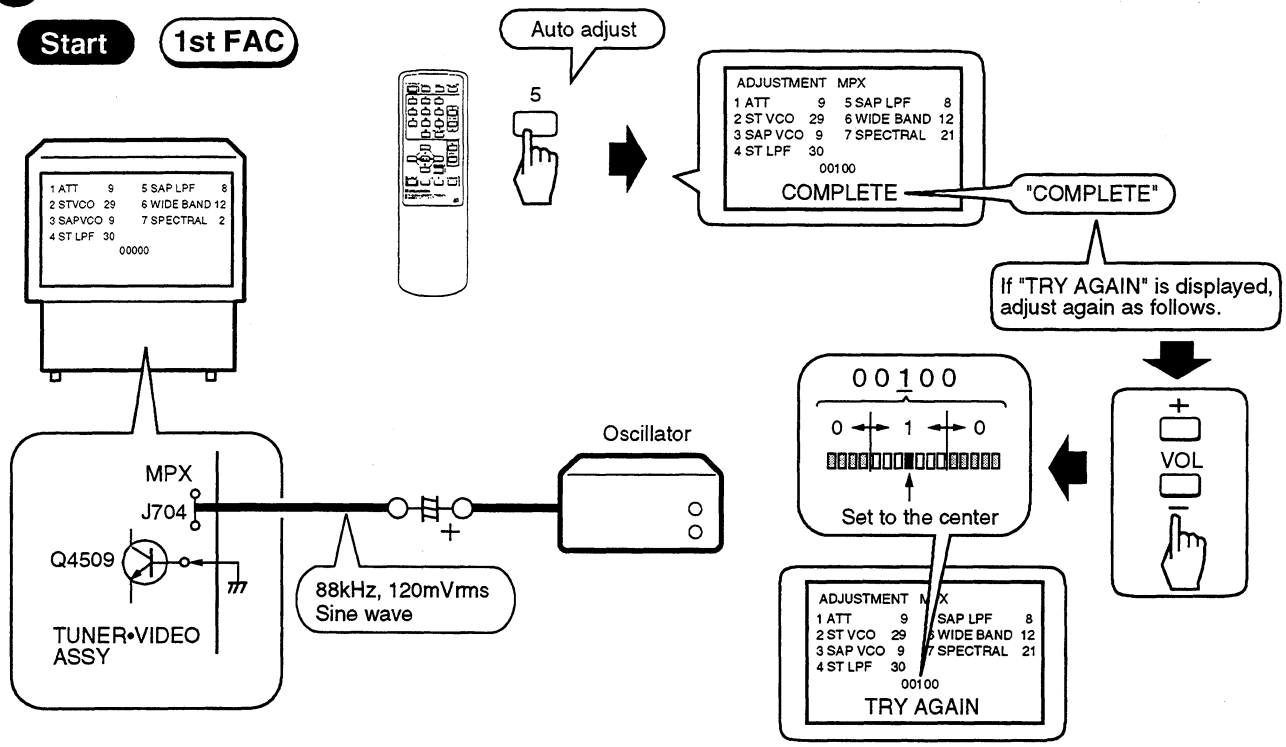

⑫-7 Separation Adjustment (WIDE BAND)

Note :
• Perform this adjustment after the ⑫ -6 adjustment.
• After this adjustment, be sure to perform the ⑫ -8 adjustment.

Start 1st FAC

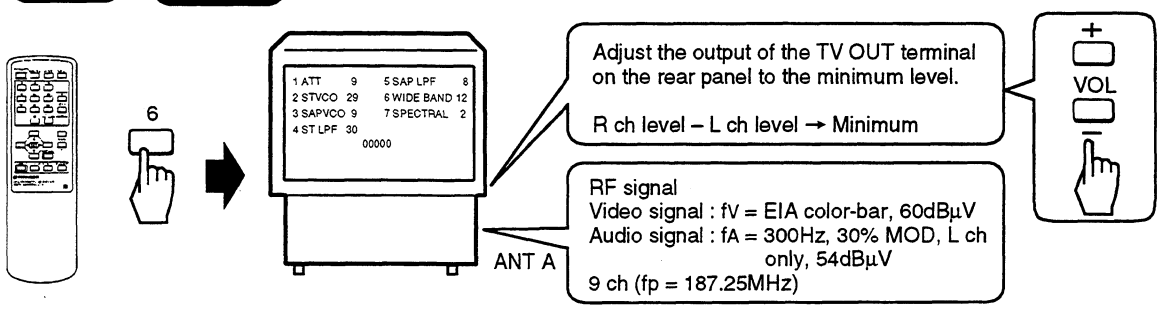

⑫-8 Separation Adjustment (SPECTRAL)

Note :
• Repeat step ⑫ -7 and ⑫ -8 till the best separation.
• When performing the separation adjustment, be sure to perform WIDE BAND adjustment first.
• If performing the WIDE BAND adjustment, be sure to perform SPECTRAL adjustment.

Start 1st FAC

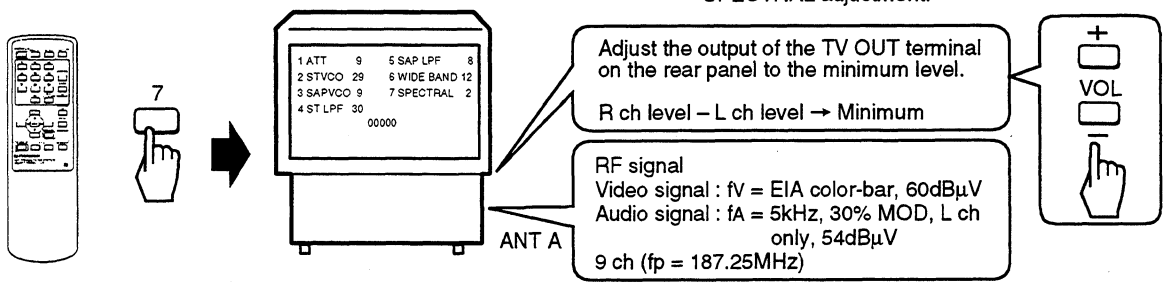

● **Connection diagram for adjusting the tuner section :**

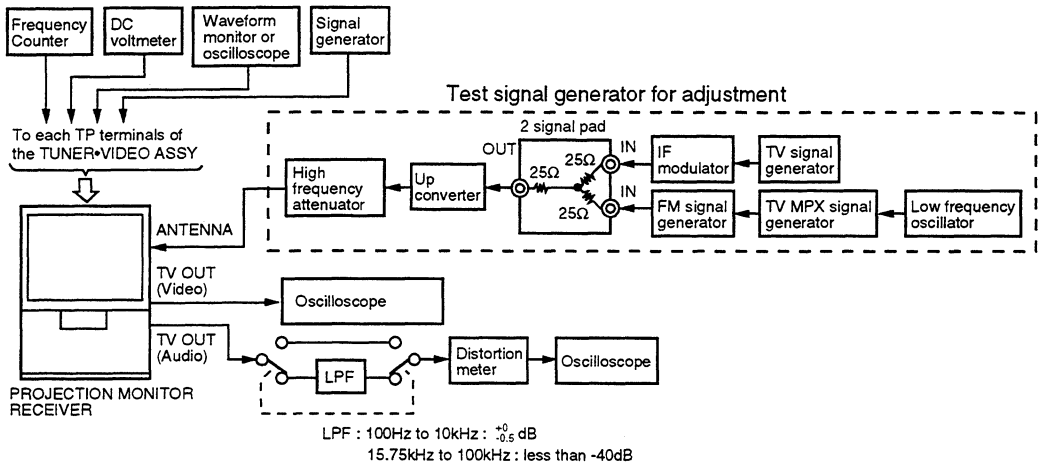

13 White Balance Adjustment

Start **1st FAC**

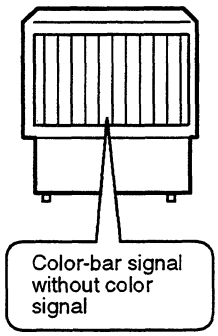

Adjust the DRV-G and DRV-B so that the bright part of the screen becomes white.

Adjust the CUT-R and CUT-B so that the dark part of the screen become gray.

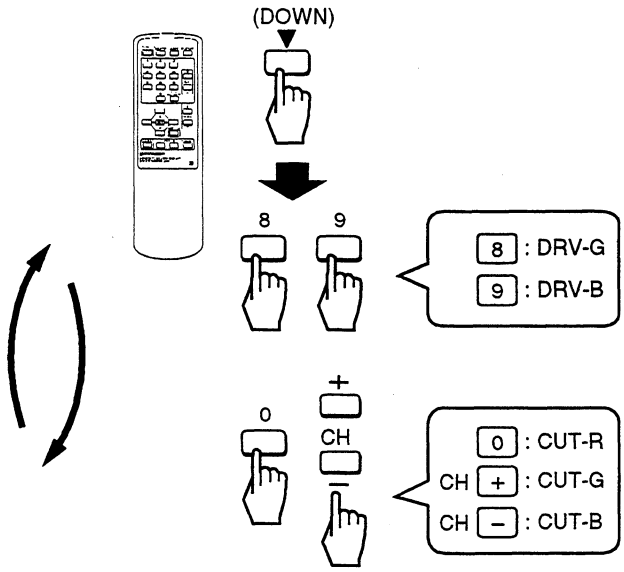

14 PIONEER's Standard Settings

14-1 Sharpness Adjustment

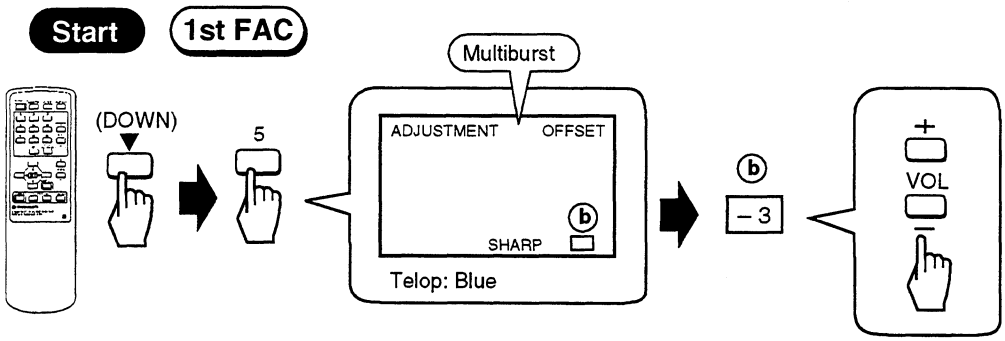

14-2 Color Adjustment

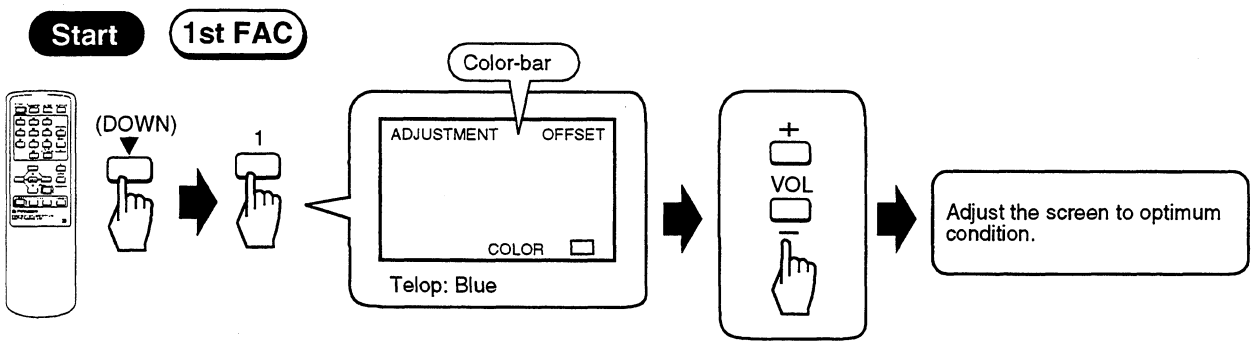

14-3 Tint Adjustment

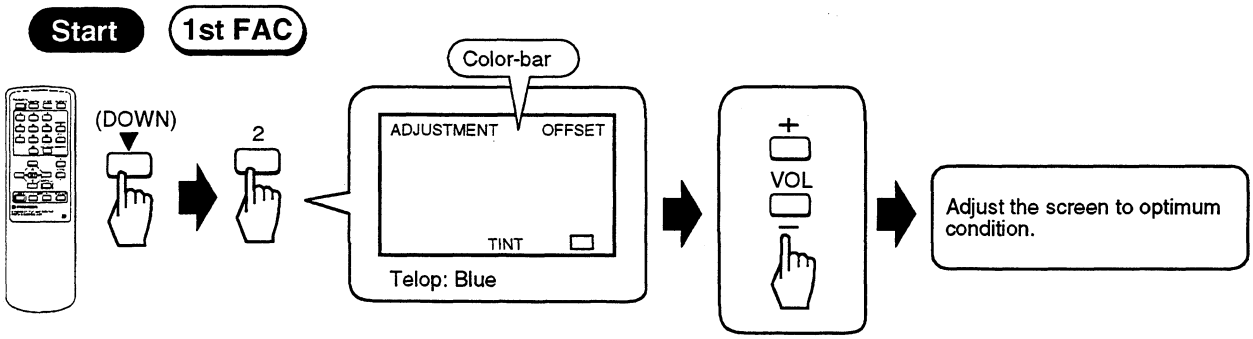

14-4 Contrast Adjustment

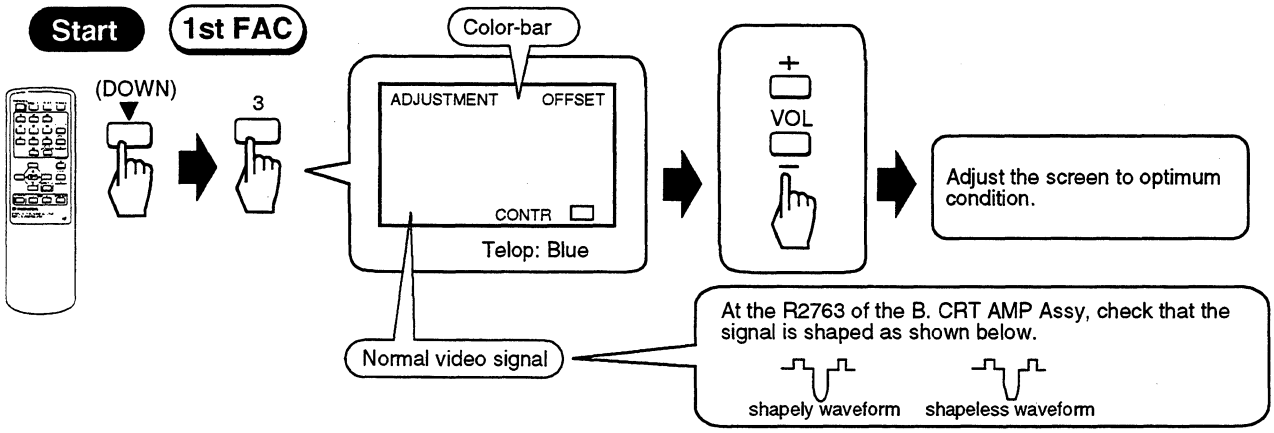

15 Y-signal Level Adjustment of Sub-picture (Adjustment for P IN P)

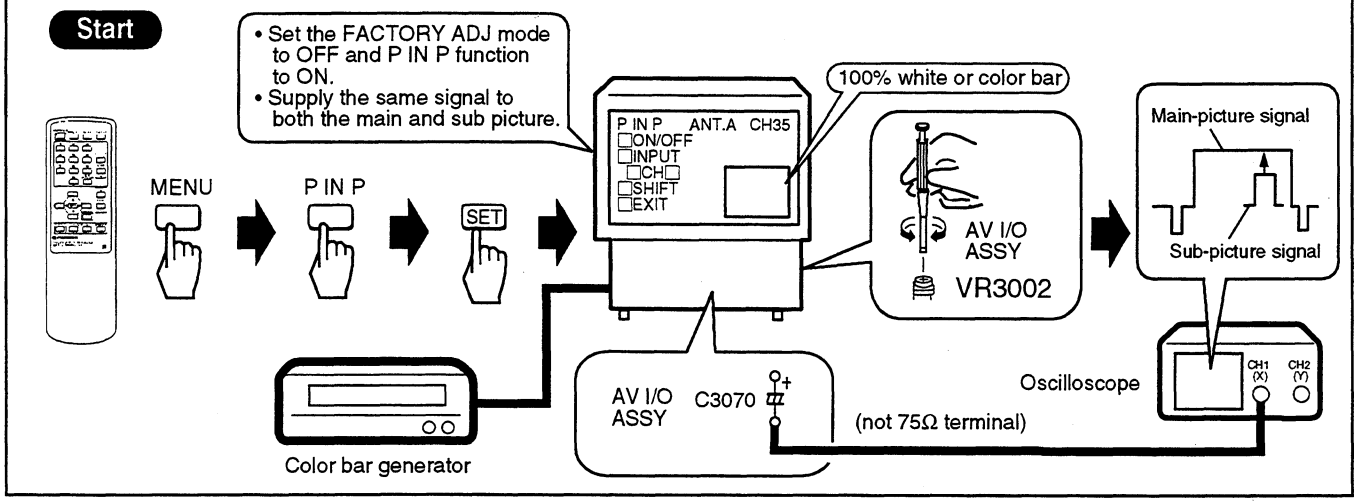

16 TINT Adjustment of Sub-picture (Adjustment for P IN P)

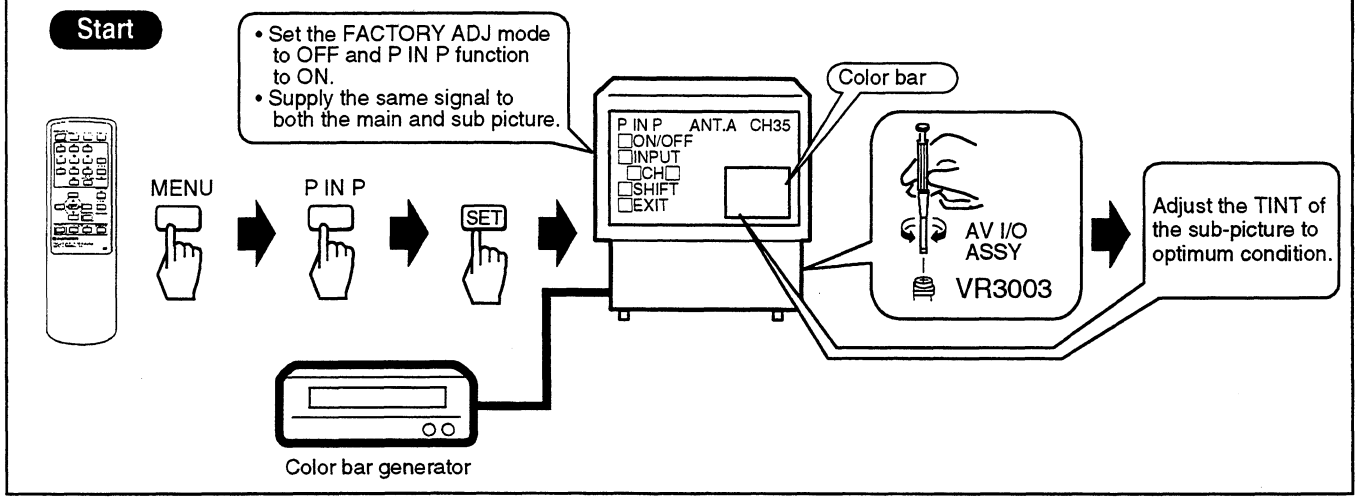

17 Chroma Level Adjustment of Sub-picture (Adjustment for P IN P)

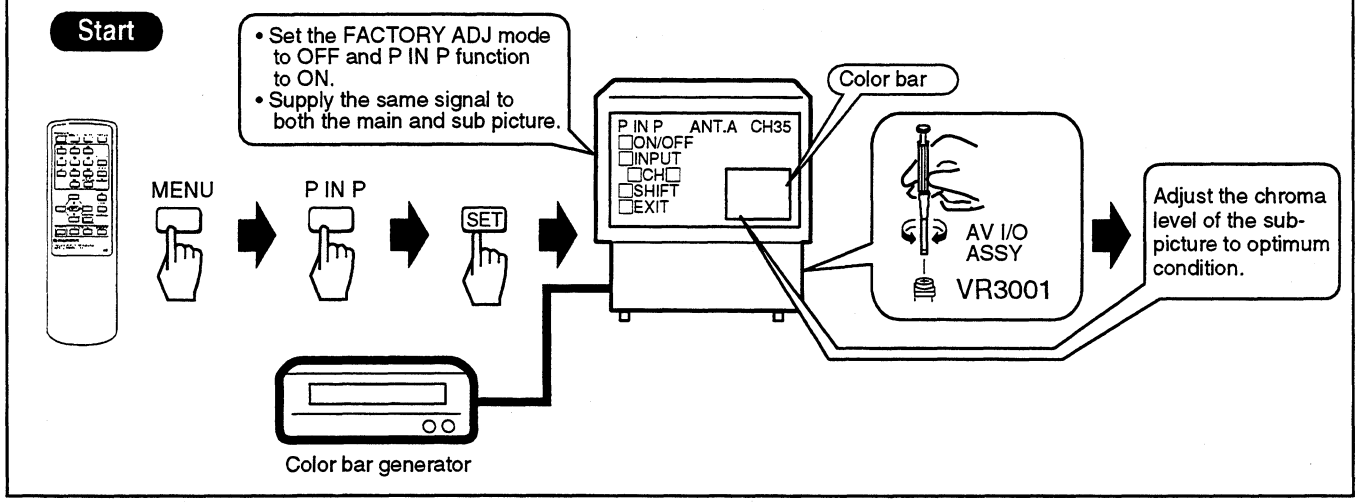

18 Write Clock Adjustment of Sub-picture (Adjustment for P IN P)

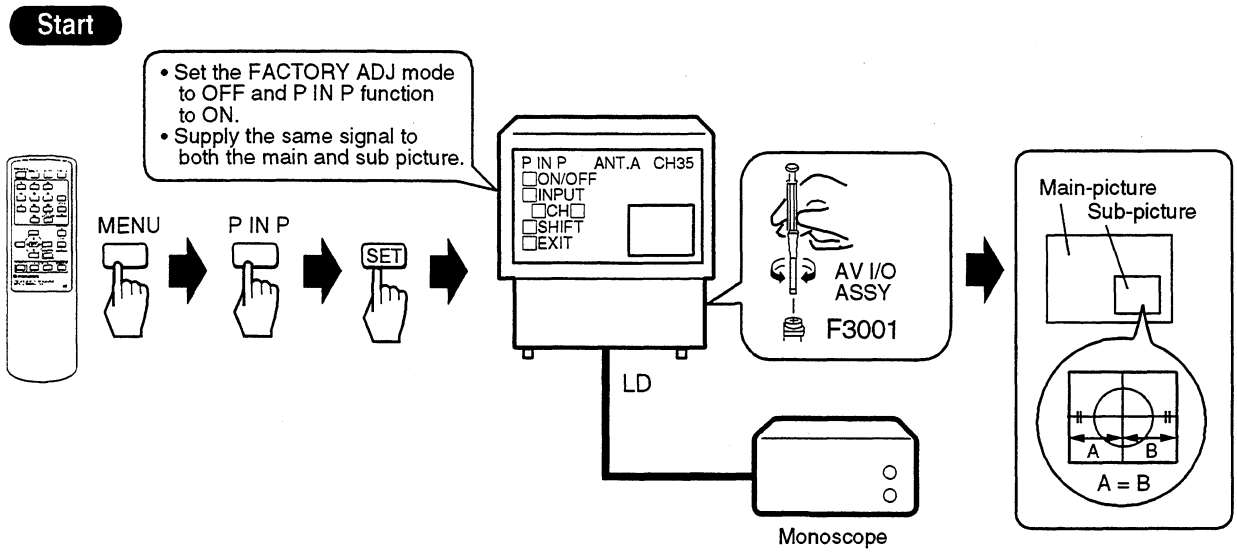

19 Read Clock Adjustment of Sub-picture (Adjustment for P IN P)

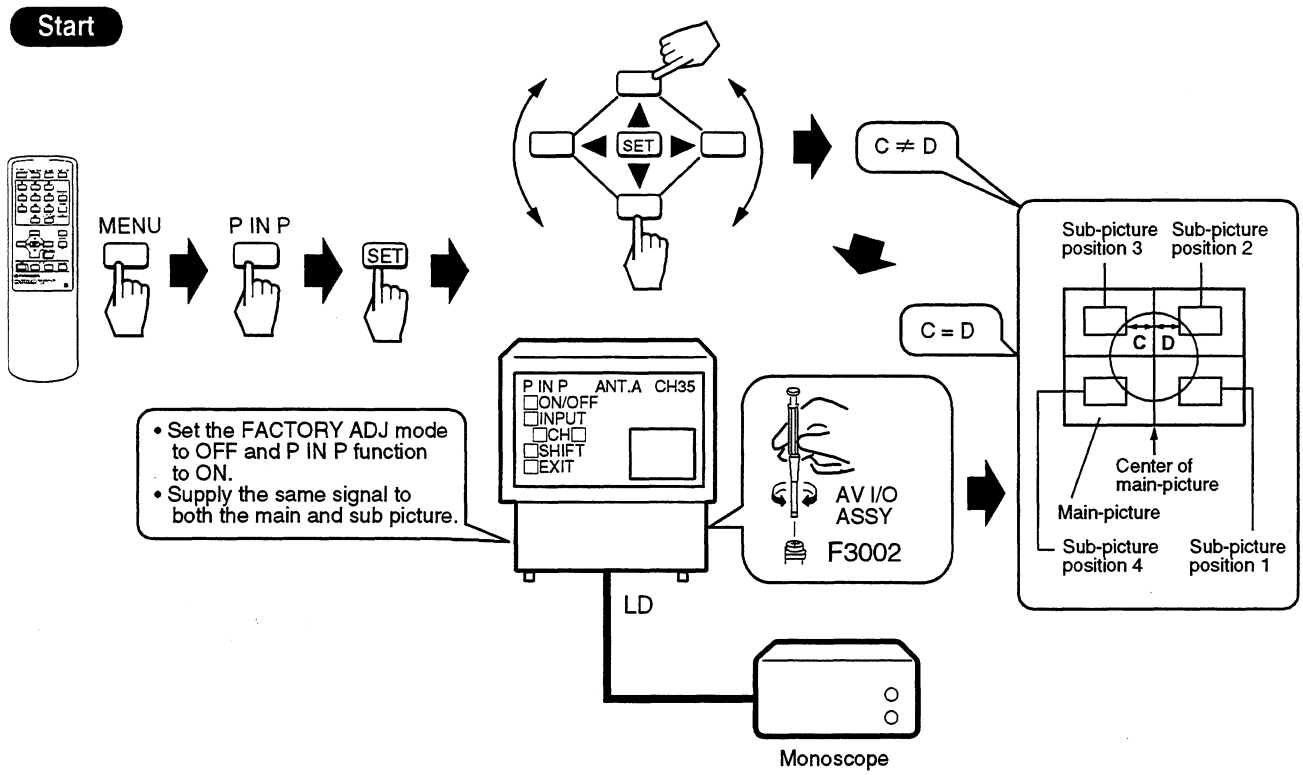

7. GENERAL INFORMATION

7.1 PARTS

7.1.1 IC

• The information shown in the list is basic information and may not correspond exactly to that shown in schematic diagrams.

■ PD5395A (TUNER•VIDEO ASSY : IC901)

• **System Control Microcomputer**

• **Pin Function**

No.	Pin Name	I/O	Active	Function	No.	Pin Name	I/O	Active	Function
1	H BLK	I	H	Sync. signal input for OSD	33	VCC	—	—	+5V power supply
2	V BLK	I	H		34	OSC1	I	—	Clock input / output for display
3	KEY	I	—	Main unit key scan signal input Analog voltage input	35	OSC2	Co	—	
4	REMOTE	I	L	Remote control signal input Decipher the PIONEER's SR signal	36	RESET	I	L	System reset Reset when L is input for more than 0.95µsec. (OSC=4.19MHz)
5	H SYNC1	I	—	H. sync. count input for tuner 1 reception When number of H-SYNC lasts eight rounds of continuation by a state of 12 - 18 during 1 msec, it judges the broadcast to be it. When other state lasts six rounds of continuation, it judge it to be broadcast nothing.	37	PF2/ N.C	Co	—	P IN P sub-picture switching signal
6	H SYNC2	I	—	H. sync. count input for tuner 2 reception	38	PF1/ N.C	Co	—	
7	AFT1	Ci	—	AFT analog voltage input for tuner 1	39	INP2/ N.C	Co	—	P IN P main-picture switching signal
8	AFT2	Ci	—	AFT analog voltage input for tuner 2	40	INP1 / D.RST	Co /Ci	—	P IN P main-picture switching signal
9	N.C	—	—	Non connection	41	ANT SW.	Co	—	Antenna input A and B switching signal H:ANT. A , L:ANT. B
10	V. MUTE	Co	H	Video mute output (Input signal switch, power ON / OFF etc.)	42	SDA	Ni/o	H	I^2C serial data input/output
11	H.SIZE.ADJ	No	H	PWM output for H. deflection size control	43	(E)SDA	Ni/o	H	I^2C serial data input/output (for E^2ROM)
12	CONV MUTE	No	L	Mute output for convergence amp IC (STK392-110) H:OFF , L:ON	44	VM.MUTE	No	H	Velocity modulation switching signal output H:ON , L:OFF
13	BASS SW	No	L	Not used (Bass boost switching signal output H:OFF, L:ON)	45	SCL	Ni/o	H	I^2C serial transfer clock
14	N.C	—	—	Non connection	46	N.C	—	—	Non connection
15	V.SIZE.ADJ	No	H	PWM output for V. deflection size control	47	(E)SCL	Ni/o	H	I^2C serial clock input/output (for E^2ROM)
16	PIP.RST	No	H	Reset signal output for P IN P IC (HD49420FS) H:ON , L:OFF	48	V.RST	No	H	Not used
17	SRR.SW	Co	H	Switching signal output for matrix surround H:ON , L:OFF	49	DATA	Co	L	Serial data output (P IN P, convergence)

• **Main-picture and P IN P sub-picture switching signal logic**

FUNCTION	Main-picture		Sub-picture	
	INP1	INP2	PF1	PF2
LD/DVD	H	H	H	H
VIDEO	L	H	L	H
VIDEO F.	H	L	H	L
TV	L	L	L	L

■ PST9146 (TUNER•VIDEO ASSY : IC903)

• **System Reset IC**

• **Block Diagram**

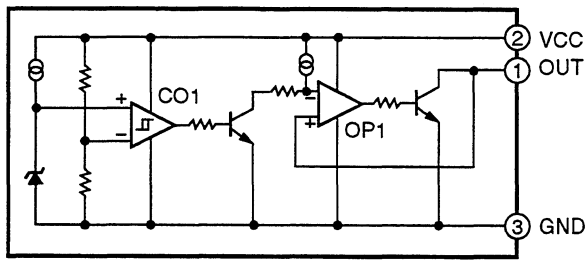

■ BA7644AN (AV I/O ASSY : IC1602, IC1603)

• **Video and Audio Signal Switch**

• **Block Diagram**

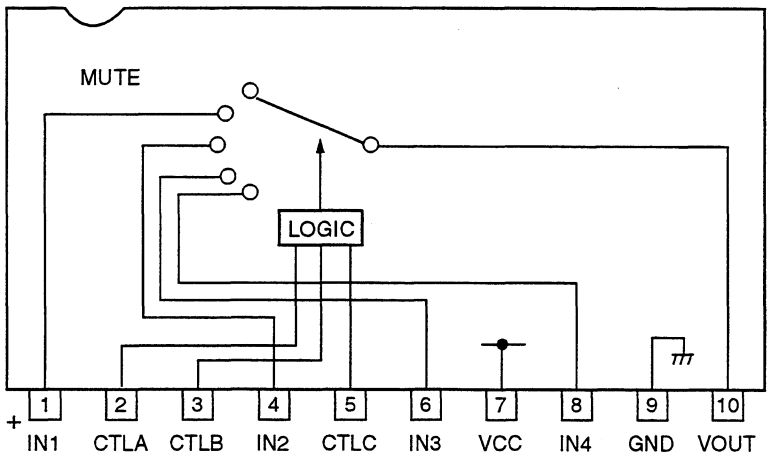

• **Truth Table**

Pin No.	2	3	5	10
—	CTLA	CTLB	CTLC	VOUT
1	L(OPEN)	L(OPEN)	L(OPEN)	IN1
4	L(OPEN)	H	L(OPEN)	IN2
6	H	L(OPEN)	L(OPEN)	IN3
8	H	H	L(OPEN)	IN4
—	*	*	H	MUTE

* : Either L (OPEN) or H approve

■ PM0011AS (CONVER CONTROL ASSY : IC2301 - IC2303)

- **Digital / Analog Convergence Correction IC**

• Pin Function

No.	Pin Name	I/O	Function	No.	Pin Name	I/O	Function
1	INH1	I	Signal input for H 1st	22	MPYIN2	I	Multiplicator input 2
2	INH2	I	Signal input for H 2nd	23	MPYIN1	I	Multiplicator input 1
3	INH3	I	Signal input for H 3rd	24	MPYOUT	O	Multiplicator output
4	INH4	I	Signal input for H 4th	25	VOUT3	O	DA output 3 for V
5	INX1	I	Signal input for H 5th (for business)	26	VOUT2	O	DA output 2 for V
6	INX2	I	Signal input for H 6th (for business)	27	VOUT1	O	DA output 1 for V
7	ICADDR	I	Address input	28	HOUT3	O	DA output 3 for H
8	HV	—	H, V selection	29	HOUT2	O	DA output 2 for H
9	VEE	—	-5V power supply	30	HOUT1	O	DA output 1 for H
10	CLKB	I	Clock input (internal connection with pin 34)	31	CEB	—	Enable (internal connection with pin 13)
11	MUTEB	I	Mute input (internal connection with pin 33) MUTE=0V	32	DATA	—	Data (internal connection with pin 12)
12	DATA	I	Data input (internal connection with pin 32)	33	MUTEB	I	Mute input (internal connection with pin 11) MUTE=0V
13	CEB	I	Enable input (internal connection with pin 31)	34	CLKB	I	Clock input (internal connection with pin 10)
14	INJ	—	Injector Connect a 2kΩ resistor between this pin and VCC (+5V).	35	PCSEL	—	Mode switch For business : -5V , For generally : 0V
15	INV1	I	Signal input for V 1st	36	A2INP	I	OP amp 2 + input
16	INV2	I	Signal input for V 2nd	37	A2INM	I	OP amp 2 − input
17	INV3	I	Signal input for V 3rd	38	A1INP	I	OP amp 1 + input
18	INV4	I	Signal input for V 4th	39	A1INM	I	OP amp 1 − input
19	INX3	I	Signal input for V 5th (for business)	40	A1OUT	O	OP amp 1 output
20	INX4	I	Signal input for V 6th (for business)	41	A2OUT	O	OP amp 2 output
21	VCC	—	+5V power supply	42	GND	—	Ground

■ CA0005AM (CONVER CONTROL ASSY : IC2309)

- **Single 2 Inputs Analog Multiplicator IC**

• Block Diagram

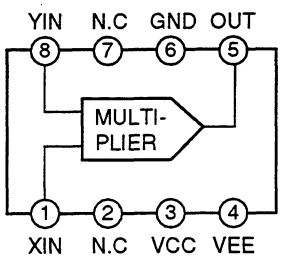

• Pin Function

No.	Pin Name	I/O	Function
1	XIN	I	X input
2	N.C	—	Non connection
3	VCC	—	Power supply
4	VEE	—	Power supply
5	OUT	O	Output
6	GND	—	Ground
7	N.C	—	Non connection
8	YIN	I	Y input

7.2 DISASSEMBLY / ASSEMBLY

7.2.1 Disassembling the Screen Frame

• Disassembly : ① → ② → ③

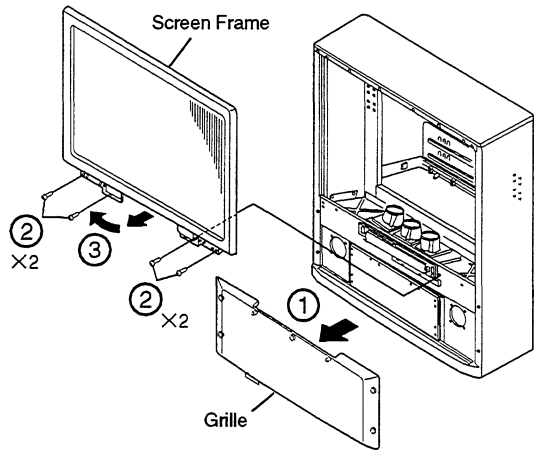

7.2.2 Assembling the Screen Frame

• Assembly : ① → ② → ③ → ④ → ⑤ → ⑥

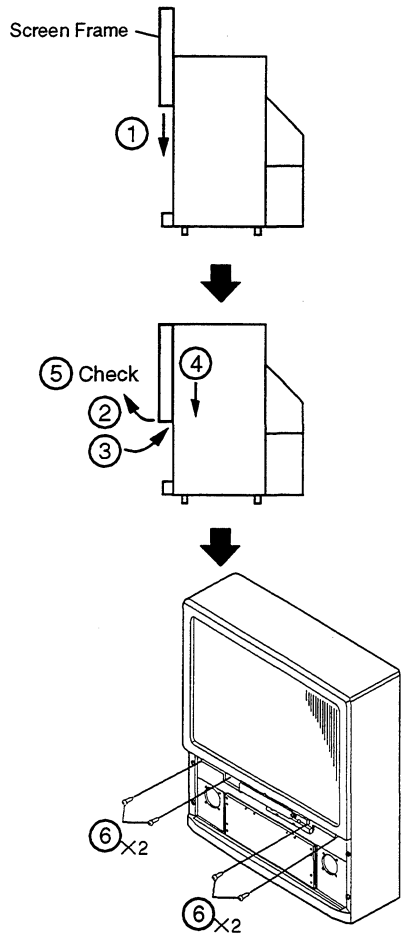

7.2.3 Mirror

• Disassembly : ①→②→③→④→⑤→⑥→⑦
• Assembly : ⑦→⑥→⑤→④→③→②→①

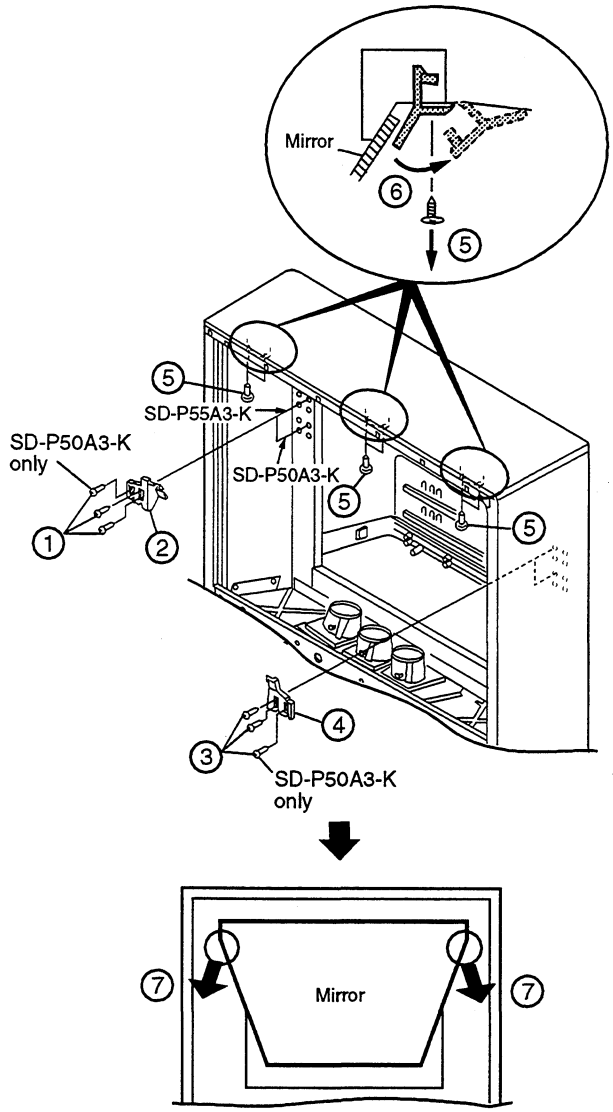

7.3 REPLACEMENT

7.3.1 CRT Assy

(1) Remove four screws ① to remove the CRT Assy, and remove the R, G or B CRT AMP Assy, VM Coil and Deflection Yoke (②).

(2) Unhook two Purse Locks ③ from Anode Cables.

(3) Remove two screws ④ to remove the HV Distributor and pull out the Anode Cable (⑤).

Caution :Refer to caution contents written with "Caution at Removing the Anode Cable From the HV Distributor" on page 115.

(4) Install the replacement CRT Assy to the CRT Stand and assemble the Deflection Yoke, VM Coil and R, G or B CRT AMP Assy.

(5) Plug the Anode Cable into the HV Distributor and assemble the HV Distributor to the CRT Stand.

(6) Perform the Anode Cable wiring.

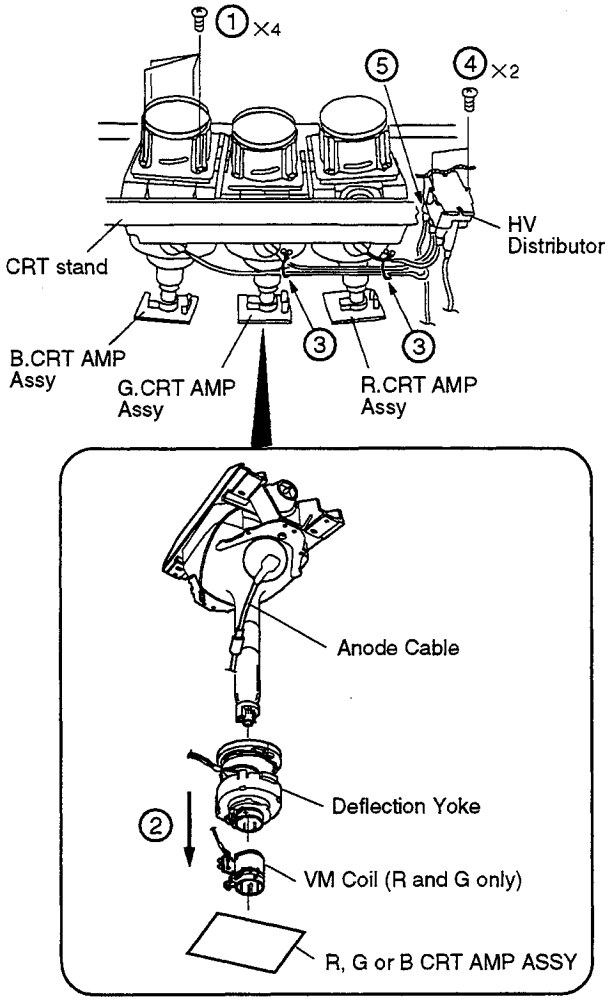

Fig. 1 Replace the CRT Assy

7.3.2 POWER SUPPLY SERVICE Assy

The POWER SUPPLY SERVICE Assy seems to be Fig. 2 is constituted.

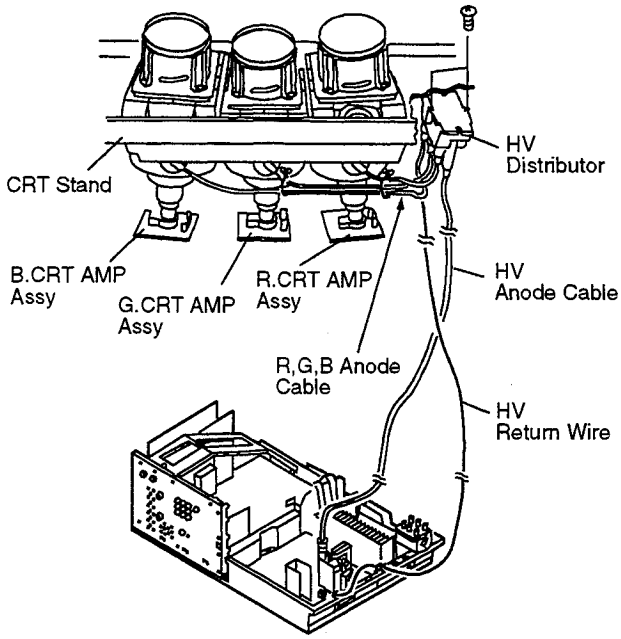

Fig. 2 Replace the POWER SUPPLY SERVICE Assy

When replacing the POWER SUPPLY SERVICE Assy, replace the POWER SUPPLY Assy and HV Distributor together.

(1) Remove fixing screws which chassis is fixed in the cabinet from rear side of the cabinet and pull out the chassis.

(2) Remove two screws to remove the HV Distributor in the CRT Stand.

(3) Solve the wiring of periphery of the POWER SUPPLY Assy, disconnect cords, lead wires and connectors etc. connected to the POWER SUPPLY Assy.

(4) Remove R, G and B Anode Cables from the HV Distributor.

(5) Replace the POWER SUPPLY Assy and fixes it in the chassis.

(6) Connect cords, lead wires and connector etc. to the POWER SUPPLY Assy and does wiring.

(7) Inserts Anode Cable etc. avoided with step (4) in the HV Distributor.

(8) Fixes the HV Distributor in the CRT Stand.

(9) Fixes the chassis in the cabinet.

• Caution at Removing the Anode Cable From the HV Distributor

Anode Cable between the Flyback Transformer (FBT) is connected to the CRT through the HV Distributor.
When replacing the CRT or POWER SUPPLY SERVICE Assy, your hands may be injured when pull out direct Anode Cable from HV Distributor fixed in the CRT Stand.
When removing the R, G and B Anode Cables, HV Anode Cable etc. from the HV Distributor, remove HV Distributor from the CRT Stand, and remove it after putting it in the place where is flat, became stable.

7.4 MEASURING METHOD

Disconnect the FBT anode cable as shown in Fig. 3.
Measure at the point where the cable enters the FBT.

Caution : Take extra precaution when measuring the voltage. High voltage are also present in surrounding circuit boards. (CRT AMP Assy, POWER SUPPLY SERVICE Assy).

SERVICEMAN WARNING
Before removing the Anode Cable. turn off the power, unplug the AC plug and let the unit discharge for more than 1 minute.

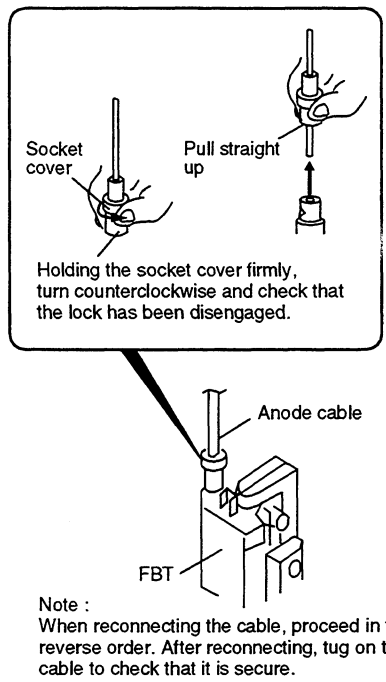

Fig. 3

7.5 WIRING DIAGRAM

Reconnect any disconnected lead wires of the Projection monitor receiver.
The important points for connection of the lead wires are as shown below.
You may find that they were connected differently. Be sure reconnect the lead wires as they were.

Note :
Ⓐ : FBT focus wire and other parts should be at least 15mm away from any other parts.
Ⓑ : Loop with a radius of 30mm or more.
Ⓒ : The anode cable and other parts should be at least 15mm away from any other parts.
Ⓓ : Loop with a radius of 50mm or more.
Ⓔ : HV return wire and FBT should be at least 15mm away from any other parts.

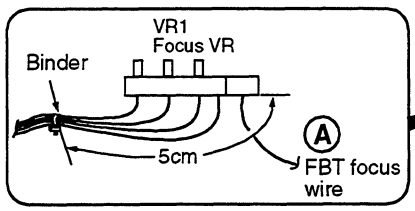

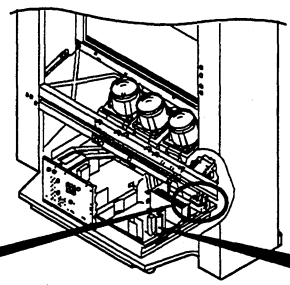

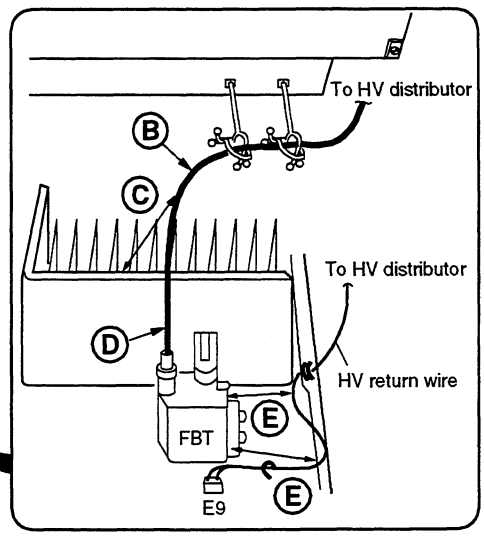

7.6 BLOCK DIAGRAM

7.6.1 PROTECTION BLOCK

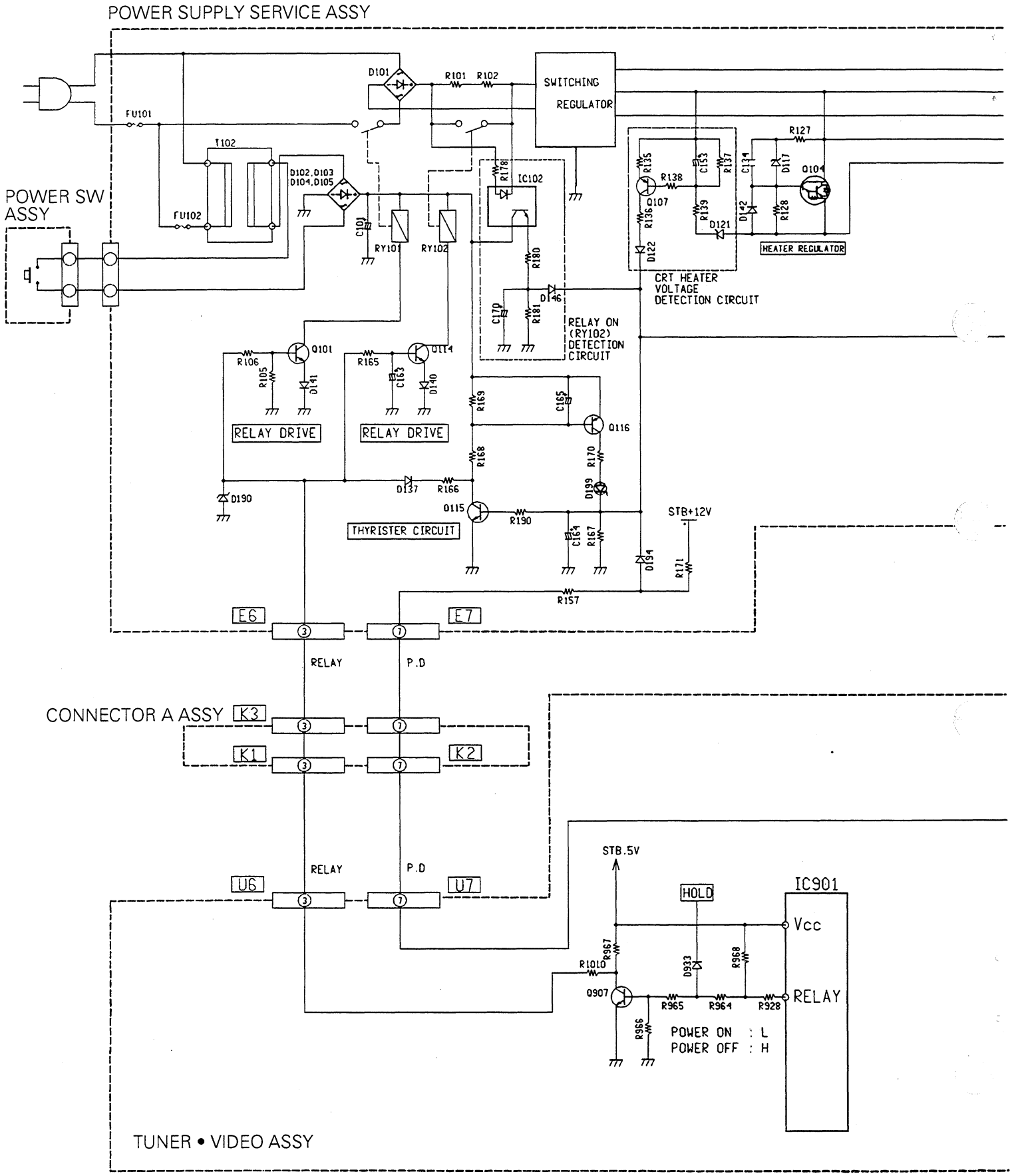

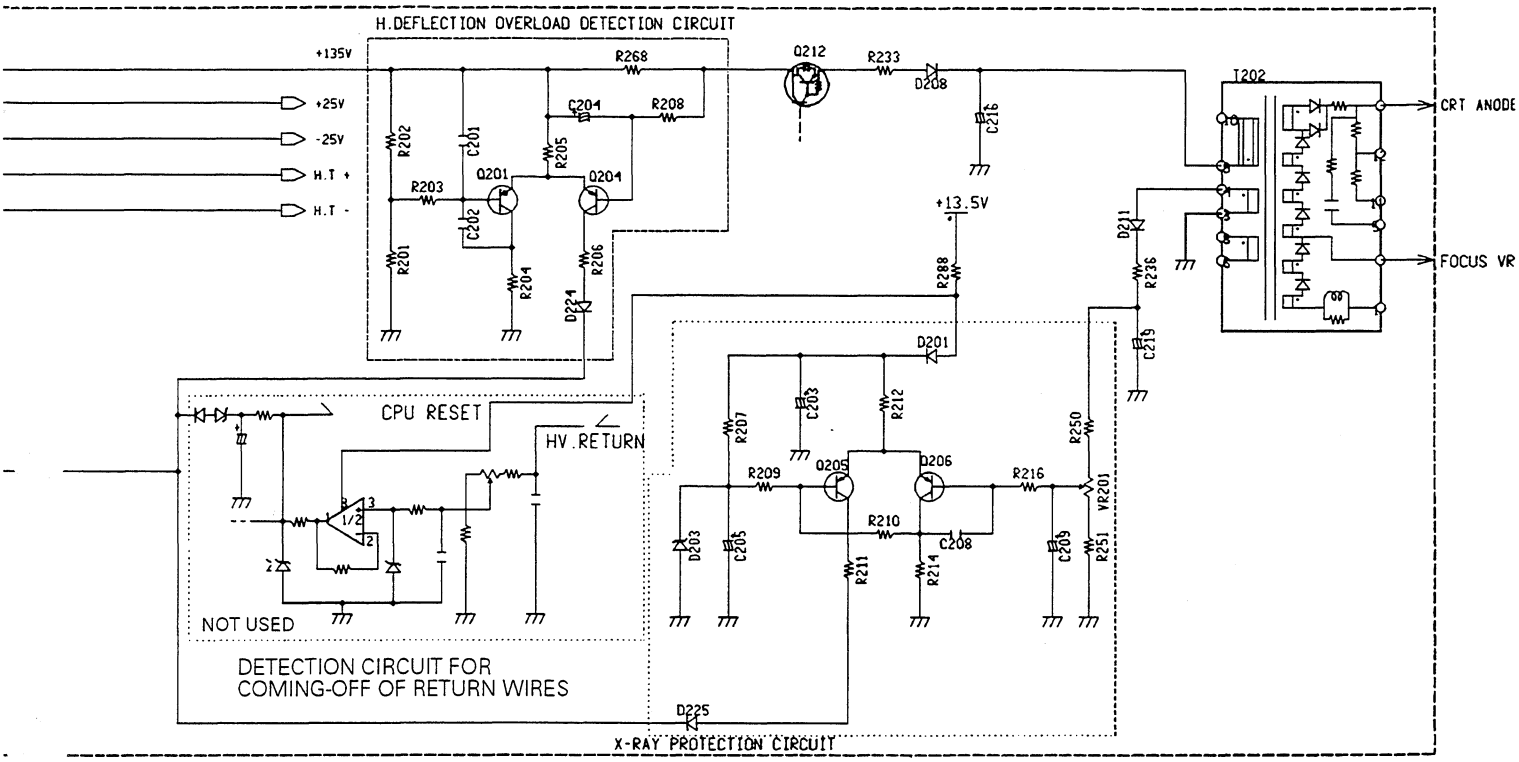

AMP(CONVERGENCE,AUDIO,V.AMP,VM) ASSY

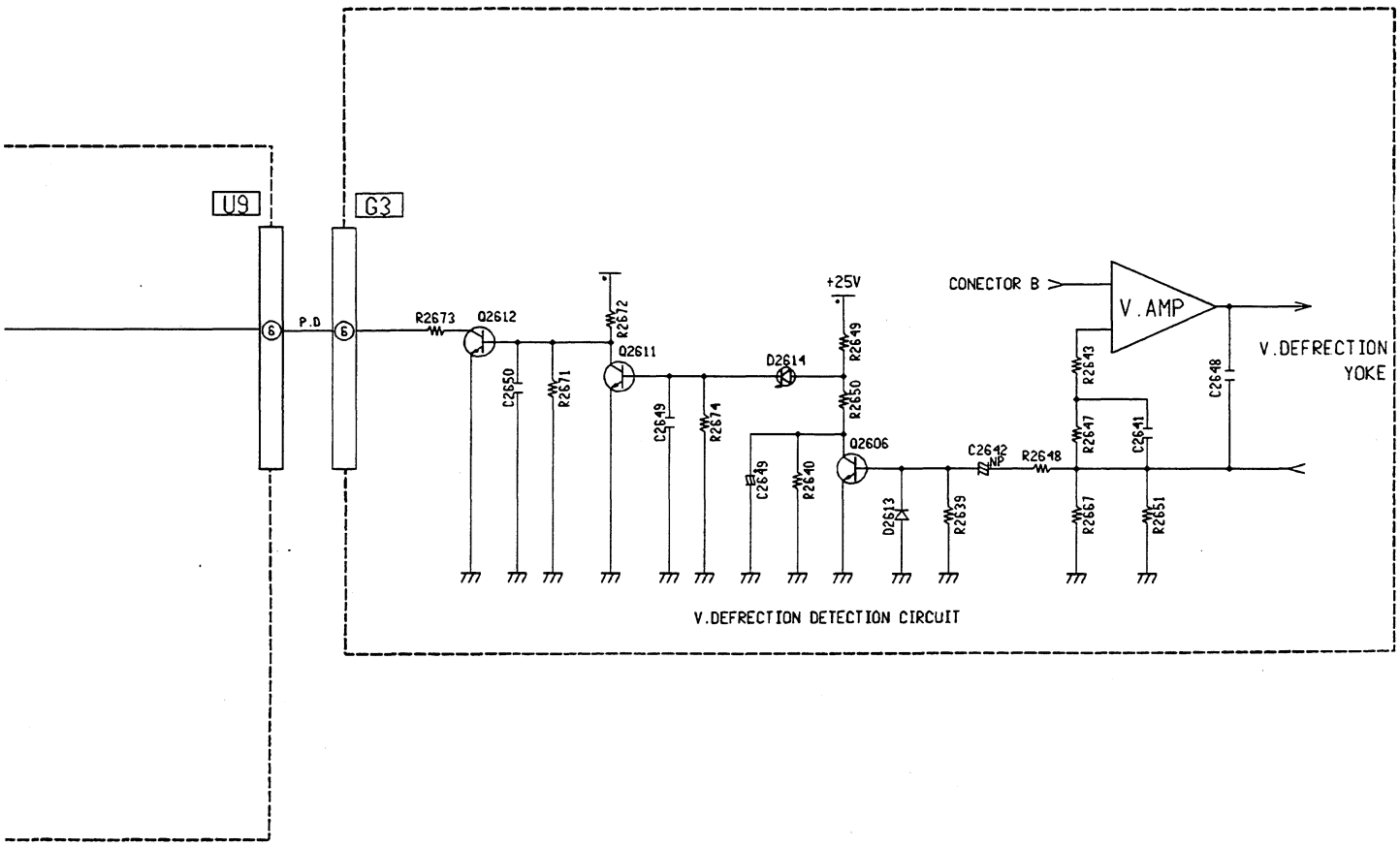

7.6.2 H.V. BLOCK AND CIRCUIT BLOCK

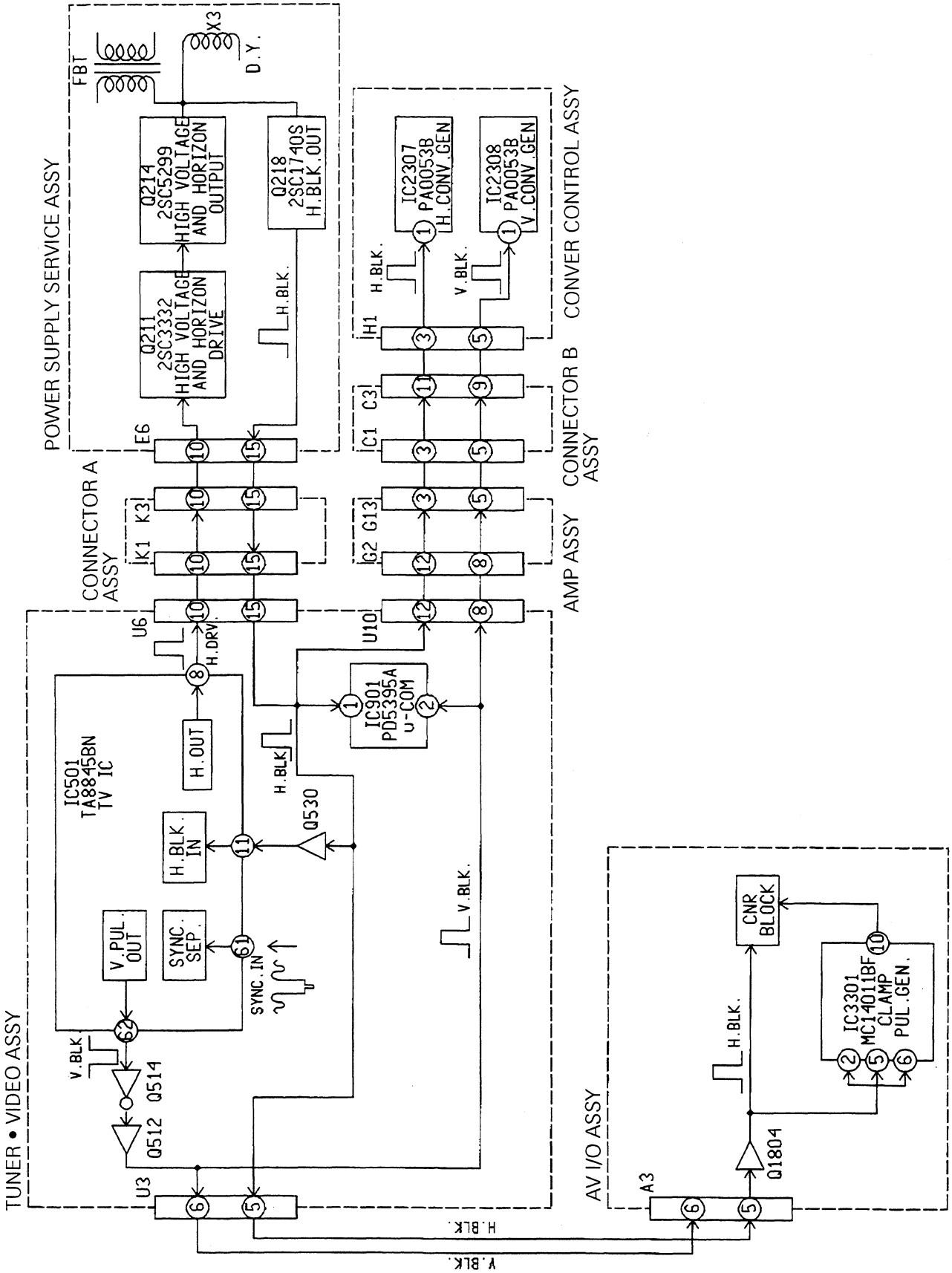

8. PANEL FACILITIES AND SPECIFICATIONS

■ PANEL FACILITIES

• FRONT PANEL

A flip-down door conceals the control panel. Push gently and release, to open the door. To close the door, lift it back up into place.
NOTE:
If you accidentally pull the door, it may not shut properly. Push the door back in to shut it.

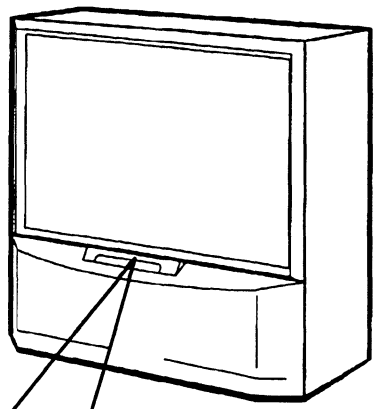

① **POWER STANDBY/ON indicator**

② **MAIN POWER switch**
Press once to turn on the power (STANDBY MODE). Press again to turn off the power.

③ **REMOTE SENSOR**
This sensor picks up infrared signals from the remote control unit.

④ **POWER switch (STANDBY/ON)**
Press once to turn on the power. Press again to turn off the power.

⑤ **INPUT SELECTOR button**
Press to select your program source; TV, Videodisc player and VIDEO. Each press of the INPUT SELECTOR changes the selection to the next source.

⑥ **CHANNEL buttons**
Press plus (+) or minus (–) to tune to a higher or lower channel. Only the preset channels can be tuned in using these buttons.

⑦ **VOLUME buttons**
Press plus (+) button to increase the volume, press minus (–) button to decrease it.

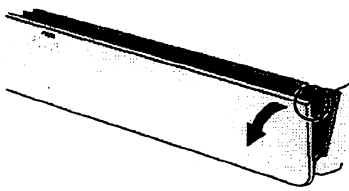

In some cases, the door may only open slightly when pushed. In such cases, open the door with your finger as shown in the figure below.

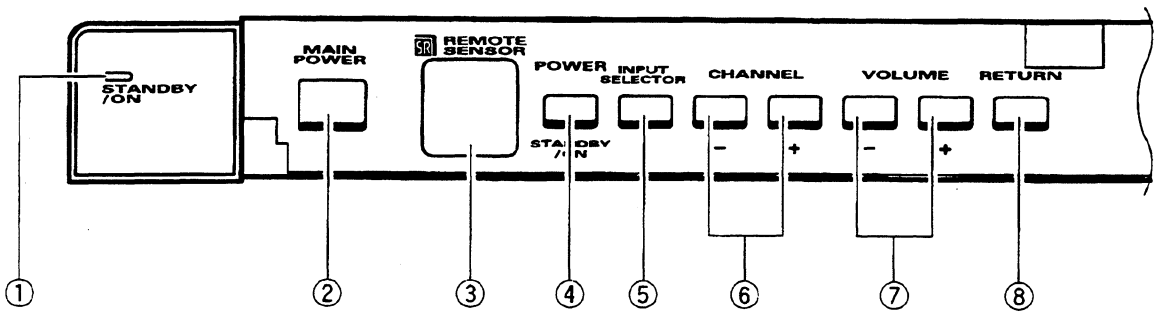

⑧ RETURN button

Press to set the Projection Monitor to its initial mode instantly if either sound or picture disappear from the speaker system or the screen during adjustment.

- Adjust the Projection Monitor again after pressing the RETURN button, as all settings have been cleared.

When the RETURN button is pressed, the Projection Monitor is set as follows:
PICTURE: Parameters, set to 0.
VOLUME: Remains at the last setting.
P-IN-P/MUTE/VNR: Set to OFF.
INPUT SELECTOR: Set to TV.
TV CHANNEL: Remains at the last channel set.
MTS: Remains at the last setting.
CC: OFF
COLOR TEMP: NORMAL
AV MEMORY: STANDARD

- When this button is pressed during the outer point convergence, the outer point convergence returns to the initial mode

⑨ VIDEO F. INPUT

These inputs are for Video Movie and VCR. Use RCA-type pin plug cords (the same as those used in Hi-Fi systems) for connections. When the audio source to be connected is monaural, connect the source to the L-(MONO) jack.

NOTE:
On rare occasions, an electrical discharge may occur inside the CRT. It makes a short, sharp pop and either no sound is produced or the volume level changes by itself. The Picture-in-Picture function will be cancelled automatically if an electrical discharge occurs when this function is engaged. However, VNR resume automatically when an electrical discharge occurs. When other abnormal functioning is suspected, turn off the power of the unit with the ①MAIN POWER switch, and after some time, turn on the power with ①MAIN POWER switch and ②POWER switch. If the abnormal functioning cannot be corrected, contact an authorized PIONEER service center.

CAUTION:

Do not press any operation button on the Projection Monitor or the remote control unit while recording. Signals from the MONITOR OUTPUT jacks may be temporarily interrupted when a button is pressed.

ATTENTION

The Projection Monitor Receiver will not function properly in the following cases.

- Lightning storms.
- High static electricity environment.
- Poor voltage regulation in the power source.

If the Projection Monitor does not operate properly, reset it as follows:

1. Unplug from the power supply for approximately 1 minute.
2. Plug the power cord in a receptacle again to reset it.

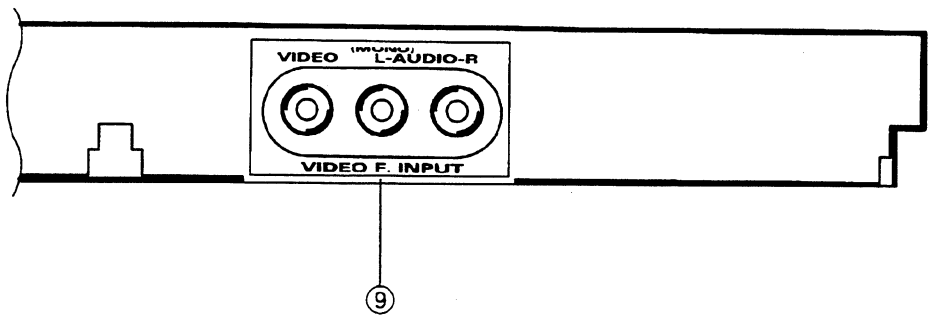

• REMOTE CONTROL UNIT

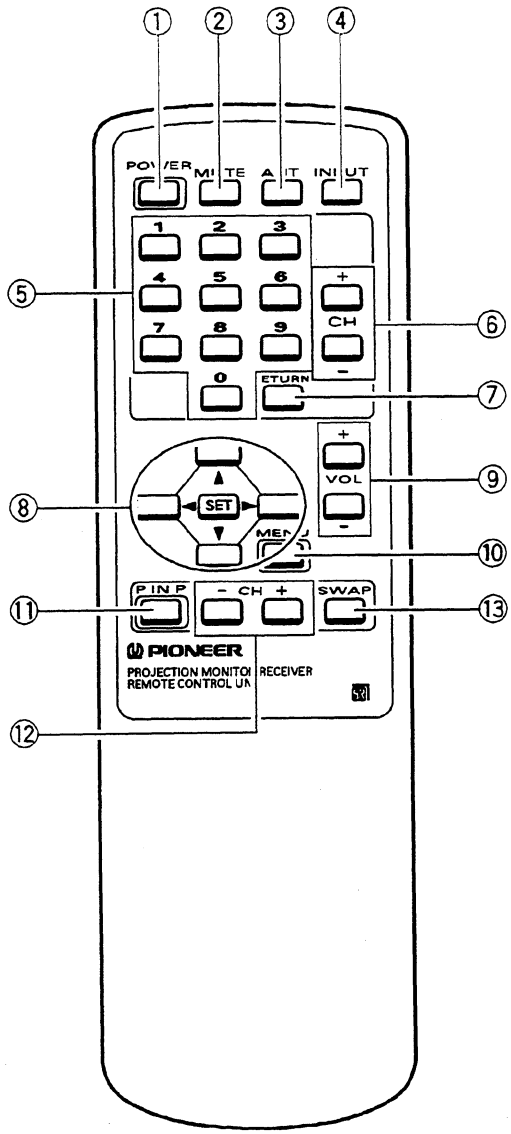

① **POWER button (STANDBY/ON)**
Turns the power of the monitor on and off.

② **MUTE button**
Press to temporarily turn off the sound. Press again to return to the previous volume level. The volume display will turn red while the mute function is set and will disappear from screen when the mute function is canceled.

③ **ANT (antenna selector) button**
Press to switch between ANTENNA-A and ANTENNA-B when you wish to watch TV.

④ **INPUT button**
Press the button to select the source you wish to watch.

⑤ **Direct channel selection buttons**
Press the button (or buttons) that corresponds to the channel that you wish to watch.

⑥ **CH (channel) +, – buttons**
Press plus (+) or minus (–) to tune in a higher or lower channel. Only the preset channels can be tuned in using these buttons.

⑦ **CH RETURN (channel return) button**
Press to switch between the current channel and the channel you were watching immediately before.

⑧ **Select / Adjust / Set buttons (SET, ◄, ►, ▲, ▼)**
◄, ►, ▲, ▼: Press to select, adjust or set items on the menu screen.
SET: Press to activate the selected function.

⑨ **VOL (volume) +, – buttons**
Press plus (+) button to increase the volume, press minus (–) button to decrease it.
Volume level will appear on the screen as numbers and a bar graph. '63' indicates the maximum volume level.
The display will disappear from the screen after 2 seconds.
* Volume display will change color automatically according to the selected input mode.

⑩ **MENU button**
Press to turn on the menu screen for use in function selection. Press again to return to normal TV screen.

⑪ **P IN P button**
Press to turn the Picture-in-Picture function on and off.

⑫ **CH (Channel) +, – buttons**
These buttons can be operated when the Picture-in-Picture function is turned on and the sub picture is in the TV input mode only. Press plus (+) or minus (–) button to tune in a higher or lower channel of the sub picture.
Only the preset channels can be tuned in using these buttons.

⑬ **SWAP button**
When the Picture-in-Picture function is turned on, press to switch between main picture and sub picture.
When ANT A broadcasts are seen on the Main picture, SWAP can be performed.
When ANT B broadcasts are seen on the Main picture, SWAP cannot be performed.

■ SPECIFICATIONS

Display section

Reception system ... American TV standard NTSC system
Screen size ..... 62" (SD-P62A3-K)
55" (SD-P55A3-K)
50" (SD-P50A3-K, SD-P50A3-Q)
CRT ..... 7" High focus CRT x 3
Brightness (White peak)
..... 350 Foot-Lambert (SD-P62A3-K)
450 Foot-Lambert (SD-P55A3-K)
540 Foot-Lambert (SD-P50A3-K, SD-P50A3-Q)
[White window signal input contrast Max.]
Horizontal resolution
..... More than 1000 lines (SD-P62A3-K, SD-P55A3-K)
1000 lines (SD-P50A3-K, SD-P50A3-Q)
[Input digital test pattern (1000 lines resolution)]
Input terminals ..... 3 video input systems
S-VIDEO input jack (Y/C separate INPUT) x 1
3 audio input systems
Output terminals ..... MONITOR OUTPUT
Video output, audio output (For recording) x 1
Input signal ... Video signal: 1.0 Vp-p ±0.2V (75 ohms load)
Audio signal: 500mV rms
Input impedance ..... Video input: 75 ohms ±10%
Audio input: 22 kilo-ohms or more
Input signal polarity ..... Synchronized negative
Output terminal signal ratings:
Output terminals
(VIDEO) ..... Video signal: 1Vp-p (75 ohms load)
Audio signal: 500 mV rms (100% modulation)
Output impedance ..... Video output: 75 ohms ±10%
Audio output: Less than 1 kilo-ohms
Sub woofer output: Less than 1 kilo-ohms

Tuner section

Circuit type ..... Video signal detection:
PLL full synchronous detection
PLL digital synthesizer system
Audio multiplex: BTSC system
Reception channels ... VHF; CH2~CH13, UHF; CH14~CH69
CATV (STANDARD, AIR, IRC or HRC)
CATV 1-125 CH
Antenna terminals
..... Antenna terminal, 75 ohms UNBAL,
F-type connector (VHF, UHF MIXED)

Amplifier section

Effective output
Front both channels driven ..... 2W + 2W
(THD. 1% 1 kHz, 16 ohms)
Built-in speaker system .... 10 cm (3-15/16 in) full range x 2

Electrical section, miscellaneous

Power requirements ..... 120 V AC, 60 Hz
Power consumption ..... 230 W, 480 VA (CSA)
External dimensions
SD-P62A3-K ..... 1360 (W) x 635 (D) x 1523 (H) mm
53 9/16 (W) x 25 (D) x 59 31/32 (H) inch
SD-P55A3-K ..... 1218 (W) x 578 (D) x 1417 (H) mm
47 15/16 (W) x 22 3/4 (D) x 55 25/32 (H) inch
SD-P50A3-K, SD-P50A3-Q
..... 1116 (W) x 578 (D) x 1340 (H) mm
43 15/16 (W) x 22 3/4 (D) x 52 3/4 (H) inch

Weight of main unit
SD-P62A3-K ..... 111 kg (244 lb 12 oz)
SD-P55A3-K ..... 104 kg (229 lb 5 oz)
SD-P50A3-K, SD-P50A3-Q ..... 94 kg (207 lb 4 oz)

Wireless remote control unit

Operation system ..... Infrared remote control system
Power source
Two DURACELL ®"AA" MN1500 1.5 V
alkaline dry cell batteries
Dimensions ..... 54 (W) x 19.4 (H) x 175 (D) mm
2 1/8 (W) x 3/4 (H) x 6 7/8 (D) inch
Weight ..... 75 g (2.65 oz) (without batteries)

Accessories

Operating instructions 1
Warranty card 1
Remote control unit 1
DURACELL ®"AA" MN1500 1.5V
Alkaline dry cell batteries 2

NOTE:
Specifications and design are subject to possible modifications without notice due to improvements.