ADJUSTMENT INSTRUCTIONS

■ Safety Precautions

1. It is safe to adjust after using insulating transformer between the power supply line and chassis input to prevent the risk of electric shock and protect the instrument.
2. Never disconnect leads while the TV receiver is on.
3. Don't short any portion of circuits while power is on.
4. The adjustment must be done by the correct appliances.
5. Unless otherwise noted, set the line voltage to 230Vac±10%, 50Hz.

■ Test Equipment required

1. RF signal generator (with pattern generator)
2. DC Power Supply
3. Multimeter (volt meter)
4. Oscilloscope
5. Color analyzer

Main Board(Component side view)

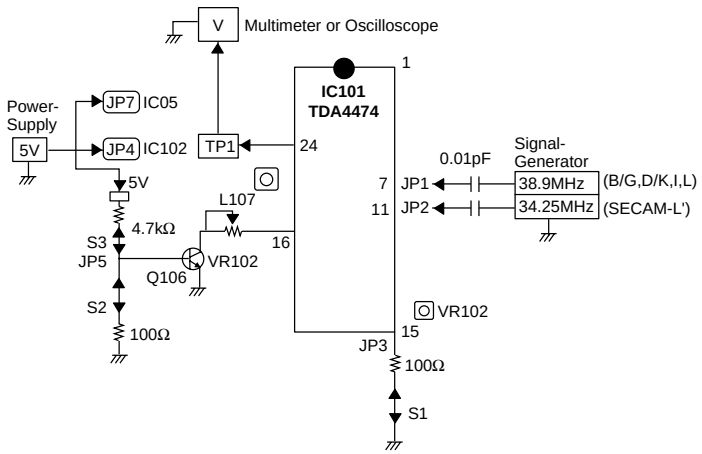

Fig. 1 : Connection Diagram of Equipment for PIF Adjustment

● PIF (Picture Intermediate Frequency) Adjustment

Test Point	**: TP1**
Adjust	**: L107**

1) Connect the measuring equipment to the Main Board as shown in Fig.1.
2) Set RF frequency and output level of RF SIGNAL GENERATOR as shown Table 1.
3) Turn off S1 and S3 and on S2.
4) Adjust L107 so that the DC voltage may be 2.5±0.1Vdc.

System	Frequency	Modulation	Output level	Adjust
B/G,D/K/I,SECAM-L	38.9MHz	OFF	10mVp-p	L107
SECAM-L'	34.25MHz	OFF	10mVp-p	VR102

(Table 1)

● SECAM-L' Adjustment

NOTE : This adjustment should be performed after PIF adjustment.

Test Point	**: TP1**
Adjust	**: VR102**

1) Turn on S1 and S3 and off S2.
2) Adjust VR102 so that the DC voltage may be indicated 2.5±0.1Vdc.

● RF AGC (Automatic Gain Control) Adjustment

Test Point	**: TP2 (J8) or Observing Display**
Adjust	**: VR101**

The RF AGC control (VR101) was aligned at the time of manufacture for optimum performance over a wide range conditions. Readjustment of VR101 should not be necessary unless unusual local conditions exist, such as ;

1) Channel interference in a CATV system.
2) Picture bending and/or color beats, which are unusually due to excessive RF signal input when the receiver is too close to a transmitting tower or when the receiver is connected to an antenna distribution system where the RF signal has been amplified. In this case, the input signal should be attenuated (with pad or filter) to a satisfactory level.
3) Picture noise caused by "broadcast noise" or weak signal. If the broadcast is "clean" and the RF signal is at least 1mV (60dBu), the picture will be noise free in any area.

Adjusting the VR101(RF AGC) control to one end of rotation will usually cause a relatively poor signal to noise ratio;
Adjusting to the other end of rotation will usually cause a degradation of over load capabilities resulting in color beats or adjacent channel interference. For best results, adjust the VR101 control while performing on all over local channels, or the voltage at TP2 will be 2.3±0.1Vdc in RF level 65±1dBuV.

● Screen Voltage Adjustment

Test Point	**: RK (Red Cathode of CPT Board)**
Adjust	**: Screen Control of FBT**

1) Tune the TV set to receive a digital pattern.
2) Press MIX button on remote controller for Service to get into the Screen Adjust Mode.
3) Adhere the Color Analyzer on the White window of CPT face.
4) Adjust Screen Volume of FBT so that the luminance of White window is 40±1ft/L.

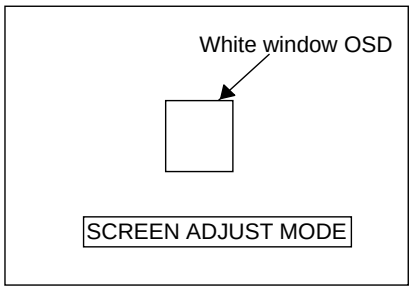

Fig. 2 SVC MODE for SCREEN Adjust

● Focus Adjustment

NOTE: This adjustment should be performed after warming up for 10 minutes.

Test Point	**: Observing Display**
Adjust	**: Focus control of FBT**

1) Tune the TV set to receive a digital pattern.
2) Adjust the lower Focus control of FBT for the best focus of vertical line B.
3) Adjust the upper Focus control of FBT for the best focus of area A.
4) Repeat above step 2) and 3) for the best overall focus.

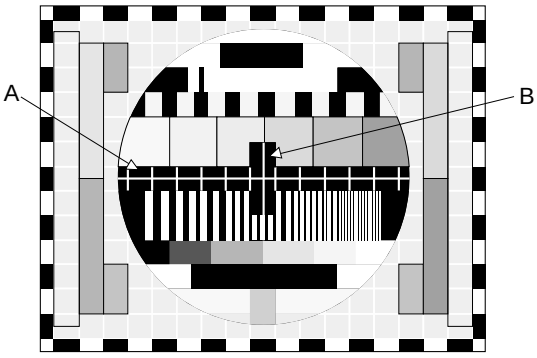

Fig. 3

● Deflection Data Adjustment (Line SVC-1)

NOTE: To enter SVC mode, press "OK" buttons on both TV set and the Remote control at the same time.

1. Preparation for Deflection Adjustment

1) At SVC mode, press the Yellow colored button.
   If the Remote Controller doesn't have the Yellow button, use the button under the Channel Down(PR ▼) button.
   And then, deflection data adjustment OSD (SVC1 mode) will be displayed.
2) Press Channel UP/DOWN button for desirous function Adjustment.
3) Press Volume UP/DOWN button to adjust the data.

VL--(Vertical Linearity)
Adjust so that the boundary line between upper and lower half is in accord with geometric horizontal center of the CPT.

VH--(Vertical Height)
Adjust so that the circle of a digital circle pattern may be located within the effective screen of the CPT.

SC--(Vertical "S" correction)
Adjust so that all distance between each horizontal lines are to be the same.

VS--(Vertical Shift)
Adjust so that the horizontal center line of a digital circle pattern is in accord with geometric horizontal center of the CPT.

HS--(Horizontal Shift)
Adjust so that the vertical center line of a digital circle pattern is in accord with geometric vertical center of the CPT.

EW--(Horizontal Width)
Adjust to that a digital circle pattern looks like exact circle.

EP--(East-west Parabola)
Adjust so that middle portion of the outermost left and right vertical line looks like parallel with vertical lines of the CPT.

EC--(East-west Corner)
Adjust so that the vertical line at every 4 corners of the screen looks like parallel with the vertical lines of the CPT.

ET--(East-west Trapezium)
Adjust to make the length of top horizontal line same with it of the bottom horizontal line.

Menu	Range	LG 29” Flat	REMARKS(n60Hz)	
VL	0~63	28		28
VA	0~63	27	-1	26
SC	0~63	16		16
VS	0~63	29		29
HS	0~63	18	+12	30
EW	0~63	37		37
EP	0~63	29		29
EC	0~63	32		32
ET	0~63	30		30
VZ	0~63	31		31

(Table 2)

● White Balance Adjustment.(LINE SVC 0)

NOTE : This adjustment should be performed after screen voltage adjustment.

1) Tune the TV set to receive an 100% white pattern.
2) Press the Yellow button on remote controller in the SVC Mode (press OK buttons on both TV set and remote controller at the same time) then you can find On Screen Display.
3) Press PSM (RED) button on remote controller. (Standard picture)
4) Press PR+ or PR- button for desirous function adjustment.
5) Adjust VOL+ or VOL- button for Gg31.
6) Adjust VOL+ or VOL-button in each status of "Rg--"/"Bg--" for X=272±8, Y=295±8 with color analyzer (color temperature 11,000°K).

Menu	Range	LG 29” Flat	REMARKS
RG	0~63	31	
GG	0~63	31	
BG	0~63	31	
Y-dly	0~15	12	15(D/K, I)

(Table 3)

● Hold Down Check(X-ray Protection)

1) Short the both terminal of R430 on the Main2 Board and check if the TV set turns into Stand-by.

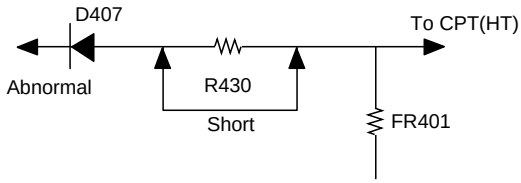

Fig. 4

● OPTION Adjustment (SVC MODE:OPTION-1, OPTION-2, OPTION-3)

NOTE: When the EEPROM has been replaced, the Option data should be restored as the function of individual system and specification.

1) Press OK buttons on both TV set and Remote Controller at the same time to get into SVC mode.
2) Press the Yellow button several times to find OPTION-1, OPTION-2 and OPTION-3.
3) Input the correspond OPTION data referring to Table below with the numeric buttons 0~9.

Table 1. OPTION 1 Function

Option	Code	Function	Remark
M-sys	0	Without NTSC-M	Not available with
	1	With NTSC-M	SECAM-L/L'
L-sys	0	Without SECAM-L/L'	Not available with
	1	With SECAM-L/L'	NTSC-M
China +AU	0	CCIR CH. Table	
	1	China CH. Table	
SCART	0	Phono jack(AV1)	
	1	Scart jack(AV1)	RGB input/Auto AV
Lang1	Lang0	OSD Language	
0	0	English Only	
1	0	English or Arabic/Parsi/	
0	1	English or Chines	
1	1	English or Deutsch/Franch/Italiano.Spanish	

Table 2. Specifications for OPTION-1 data

OPTION Data	M-sys	L-sys	China	SCART	Lang1	Lang0
0	0	0	0	0	0	0
1	0	0	0	0	0	1
2	0	0	0	0	1	0
3	0	0	0	0	1	1
4	0	0	0	1	0	0
5	0	0	0	1	0	1
6	0	0	0	1	1	0
7	0	0	0	1	1	1
8	0	0	1	0	0	0
9	0	0	1	0	0	1
10	0	0	1	0	1	0
11	0	0	1	0	1	1
12	0	0	1	1	0	0
13	0	0	1	1	0	1
14	0	0	1	1	1	0
15	0	0	1	1	1	1
16	0	1	0	0	0	0
17	0	1	0	0	0	1
18	0	1	0	0	1	0
19	0	1	0	0	1	1
20	0	1	0	1	0	0
21	0	1	0	1	0	1
22	0	1	0	1	1	0
23	0	1	0	1	1	1
24	0	1	1	0	0	0
25	0	1	1	0	0	1
26	0	1	1	0	1	0
27	0	1	1	0	1	1
28	0	1	1	1	0	0
29	0	1	1	1	0	1
30	0	1	1	1	1	0
31	0	1	1	1	1	1
32	1	0	0	0	0	0
33	1	0	0	0	0	1
34	1	0	0	0	1	0
35	1	0	0	0	1	1
36	1	0	0	1	0	0
37	1	0	0	1	0	1
38	1	0	0	1	1	0
39	1	0	0	1	1	1
40	1	0	1	0	0	0
41	1	0	1	0	0	1
42	1	0	1	0	1	0
43	1	0	1	0	1	1
44	1	0	1	1	0	0
45	1	0	1	1	0	1
46	1	0	1	1	1	0
47	1	0	1	1	1	1

Table 3. OPTION 2 Function

Option	Code	Function	Remark
TOP	0	Without TOP Teletext	Set to 0 for no TXT
	1	With TOP Teletext	
DCF	0	Without DCF(Digital Comb-Filter)	Set to 1 for DCF board
	1	With DCF	
TILT	0	Without TILT circuit	Set to 1 for Degaussing
	1	With TILT circuit	Coil with TILT
EYE	0	Without EYE	Set to 1 for EYE
	1	With EYE	module
Woofer	0	Without Woofer	Set to 0 for Squitter
	1	With Woofer	AMP
V-curve	0	Normal Volume curve(Europe, CIS)	Set to 1 for South East
	1	Rapid Volume curve(South East Asia, China)	Asia and China

Table 4. Specifications for OPTION-2 data

OPTION Data	TOP	DCF	TILT	EYE	Woofer	V-curve
0	0	0	0	0	0	0
1	0	0	0	0	0	1
2	0	0	0	0	1	0
3	0	0	0	0	1	1
4	0	0	0	1	0	0
5	0	0	0	1	0	1
6	0	0	0	1	1	0
7	0	0	0	1	1	1
8	0	0	1	0	0	0
9	0	0	1	0	0	1
10	0	0	1	0	1	0
11	0	0	1	0	1	1
12	0	0	1	1	0	0
13	0	0	1	1	0	1
14	0	0	1	1	1	0
15	0	0	1	1	1	1
16	0	1	0	0	0	0
17	0	1	0	0	0	1
18	0	1	0	0	1	0
19	0	1	0	0	1	1
20	0	1	0	1	0	0
21	0	1	0	1	0	1
22	0	1	0	1	1	0
23	0	1	0	1	1	1
24	0	1	1	0	0	0
25	0	1	1	0	0	1
26	0	1	1	0	1	0
27	0	1	1	0	1	1
28	0	1	1	1	0	0
29	0	1	1	1	0	1
30	0	1	1	1	1	0
31	0	1	1	1	1	1
32	1	0	0	0	0	0
33	1	0	0	0	0	1
34	1	0	0	0	1	0
35	1	0	0	0	1	1
36	1	0	0	1	0	0
37	1	0	0	1	0	1
38	1	0	0	1	1	0
39	1	0	0	1	1	1
40	1	0	1	0	0	0
41	1	0	1	0	0	1
42	1	0	1	0	1	0
43	1	0	1	0	1	1
44	1	0	1	1	0	0
45	1	0	1	1	0	1
46	1	0	1	1	1	0
47	1	0	1	1	1	1
48	1	1	0	0	0	0
49	1	1	0	0	0	1
50	1	1	0	0	1	0
51	1	1	0	0	1	1
52	1	1	0	1	0	0
53	1	1	0	1	0	1
54	1	1	0	1	1	0
55	1	1	0	1	1	1
56	1	1	1	0	0	0
57	1	1	1	0	0	1
58	1	1	1	0	1	0
59	1	1	1	0	1	1
60	1	1	1	1	0	0
61	1	1	1	1	0	1
62	1	1	1	1	1	0
63	1	1	1	1	1	1

Table 5. OPTION 3 Function

Option	Code	Function	Remark
ACMS	0 1	Without Auto Channel Memory System With Auto Channel Memory System	Set to 0 for no TXT
DKNicam	0 1	D/K stereo Without DK stereo	Set to 1 for Chinese Model
H-Phone	0 1	Without H/P jack With H/P jack	Set to 1 for H/P jack
VM	0 1	Without VM With VM	Set to 1 for VM coil magnet
Hotel	0 1	Without Hotel mode With Hotel mode	Buyer option
Max. vol	0~ 100	Maximum volume level for Hotel mode data(Normal=36steps)	Defalt

Table 6. Specifications for OPTION-3 data

OPTION Data	ACMS	DKNicam	H-phone	VM	Hotel	Max. vol
0, 1	0	0	0	0	0	*
2, 3	0	0	0	0	1	*
4, 5	0	0	0	1	0	*
6, 7	0	0	0	1	1	*
8, 9	0	0	1	0	0	*
10, 11	0	0	1	0	1	*
12, 13	0	0	1	1	0	*
14, 15	0	0	1	1	1	*
16, 17	0	1	0	0	0	*
18, 19	0	1	0	0	1	*
20, 21	0	1	0	1	0	*
22, 23	0	1	0	1	1	*
24, 25	0	1	1	0	0	*
26, 27	0	1	1	0	1	*
28, 29	0	1	1	1	0	*
30, 31	0	1	1	1	1	*
32, 33	1	0	0	0	0	*
34, 35	1	0	0	0	1	*
36, 37	1	0	0	1	0	*
38, 39	1	0	0	1	1	*
40, 41	1	0	1	0	0	*
42, 43	1	0	1	0	1	*
44, 45	1	0	1	1	0	*
46, 47	1	0	1	1	1	*
48, 49	1	1	0	0	0	*
50, 51	1	1	0	0	1	*
52, 53	1	1	0	1	0	*
54, 55	1	0	1	1	0	*
56, 57	1	0	1	1	1	*
58, 59	1	1	0	0	0	*
60, 61	1	1	0	0	1	*
62, 63	1	1	0	1	0	*

● Sound Pre scaler

1) Set to Scart when one of AV1 or AV2 is Scart jack.
   Audio out level : 500mVrms at 54% modulation ratio
2) Set to Phono when both of AV1 and AV2 is RCA Phono jack.
   Audio out level : 500mVrms at 100% modulation ratio.
   (NTSC-M : 400mVrms)

※ MSP3410(3400) Pre-scaler setting

Menu	Description	Scart		Phono		SECAM-L/L' model	
		B/G,D/K,I	M	B/G,D/K,I	M	B/G,D/K,I	L/L'
FP	FM Pre-scaler	20	40	20	40	20	20
NP	Nicam Pre-scaler	85	85	85	85	85	85
SP	Scart Pre-scaler	20	20	47	47	20	25
S1 vol	Scart1 Pre-scaler	110	110	50	50	110	80
S2 vol	Scart2 Pre-scaler	110	110	50	50	110	80

BLOCK DIAGRAM

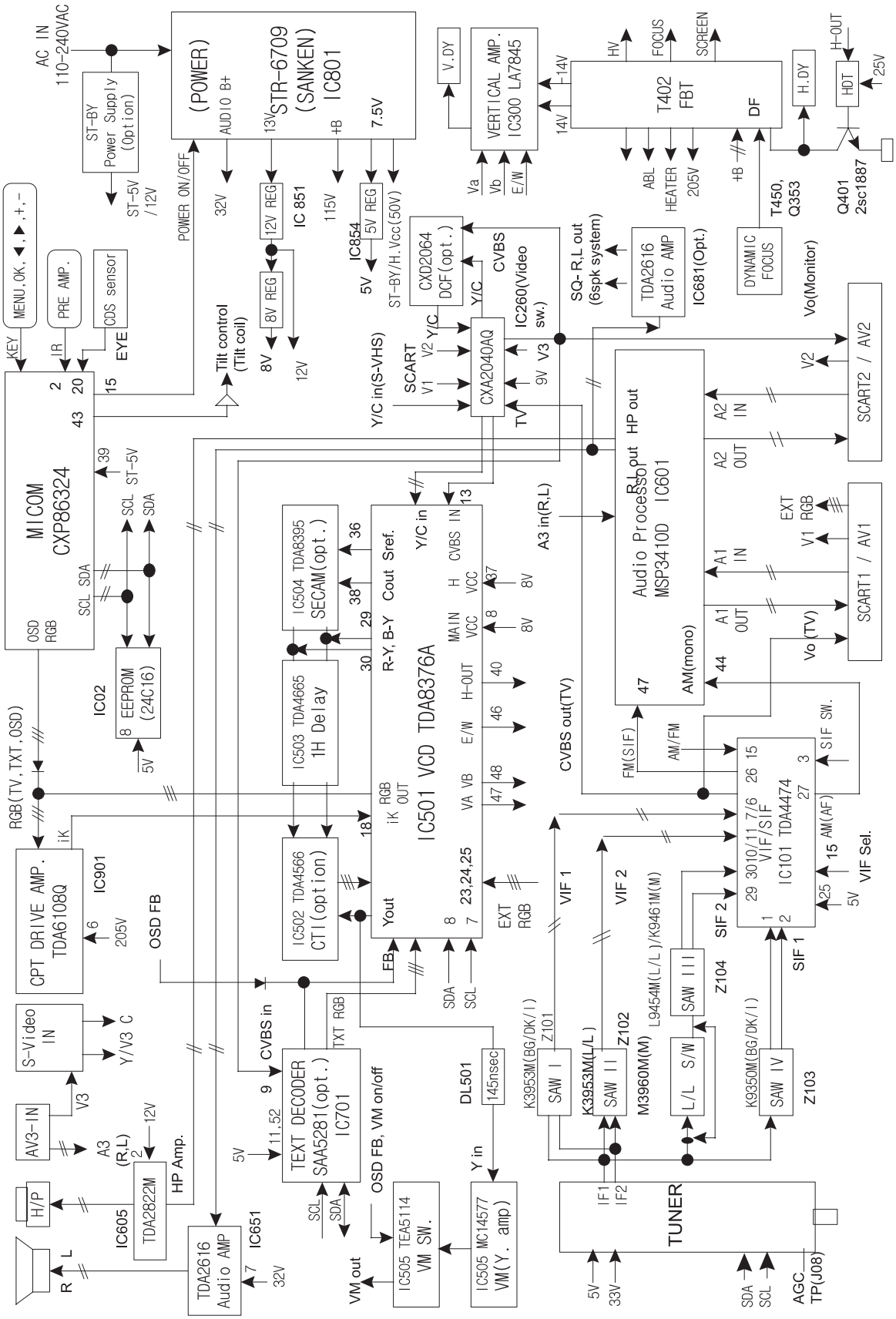

Service Sheet of MC-991A

P/No : 3854VA0052A-S1
Date : 1999.4 .15

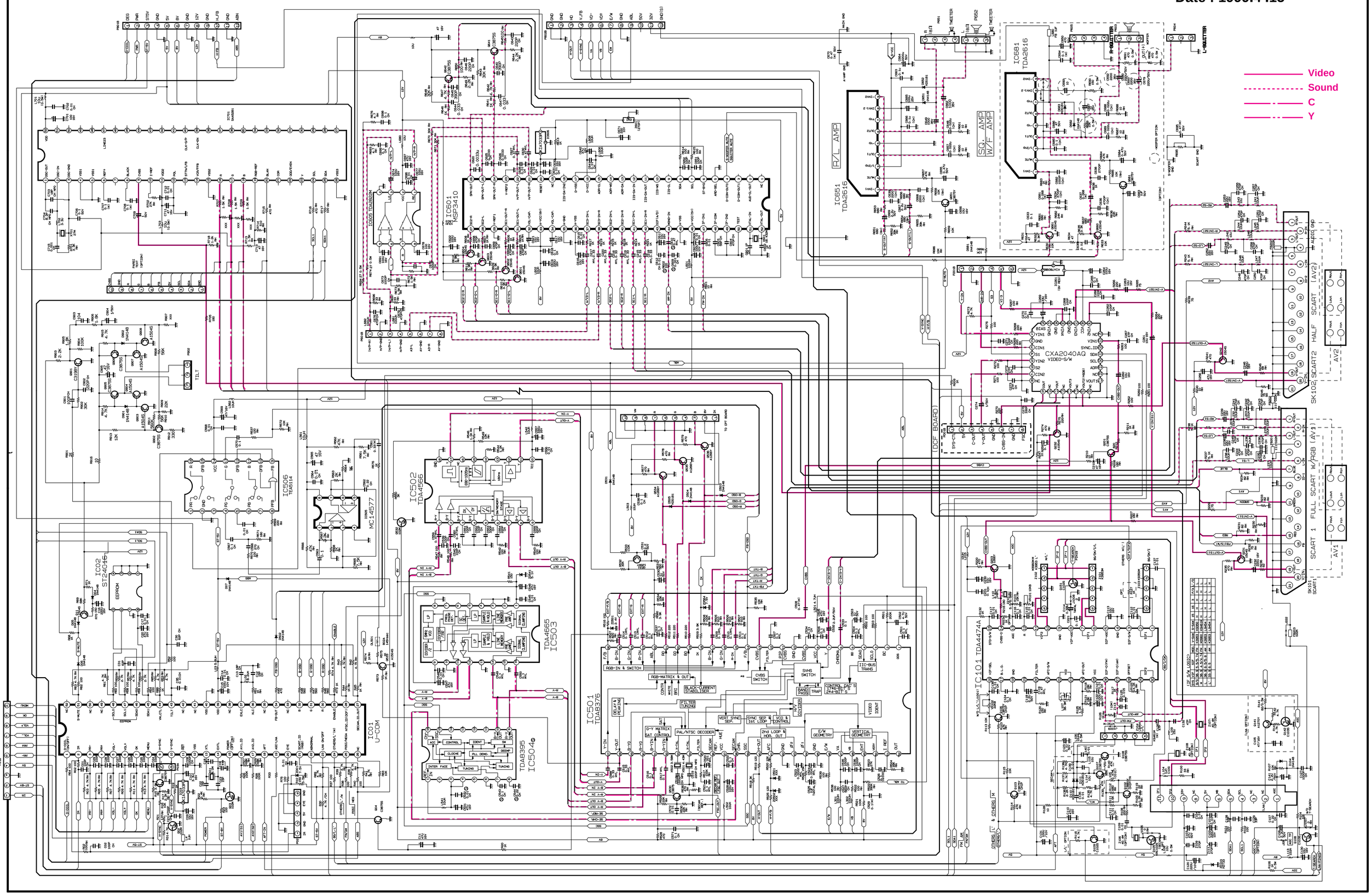

Service Sheet of MC-991A

P/No : 3854VA0052A-S2
Date : 1999.4 .15

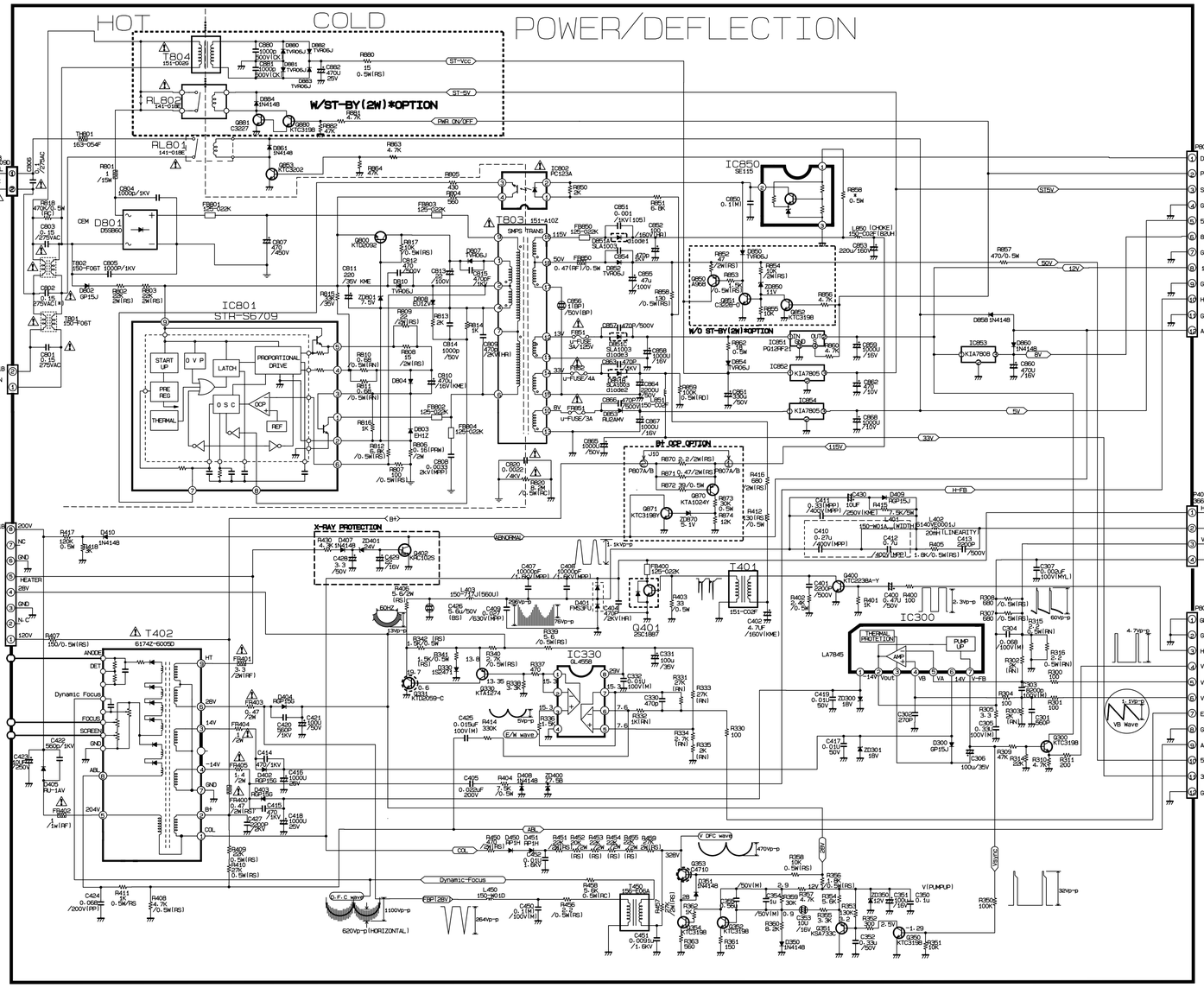

MC-991A SUB CIRCUIT DIAGRAM

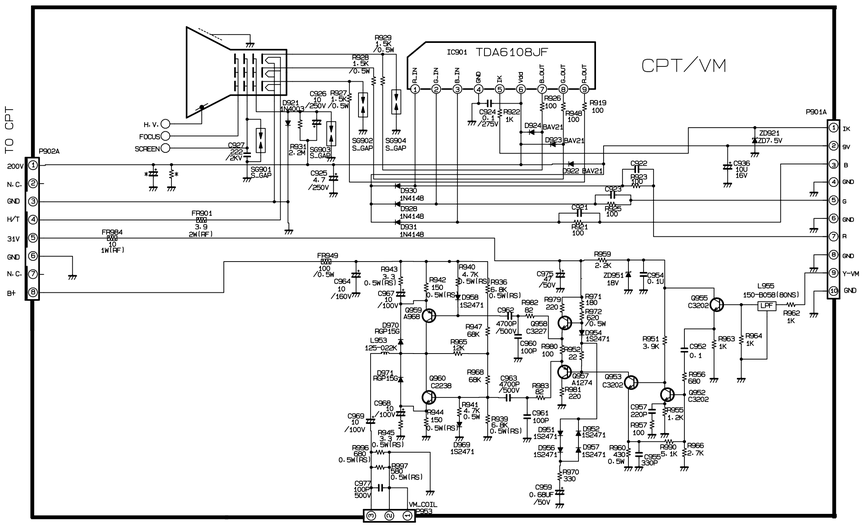

CONTROL PCB ASSY

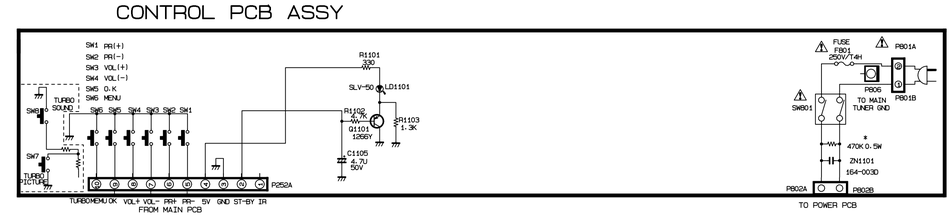

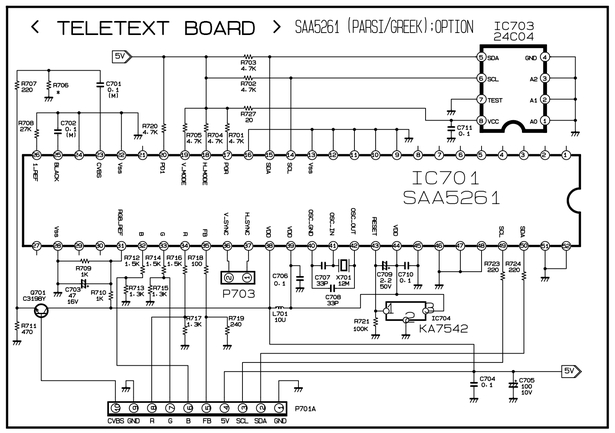

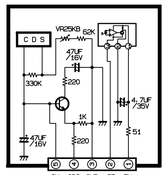

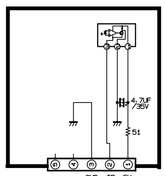

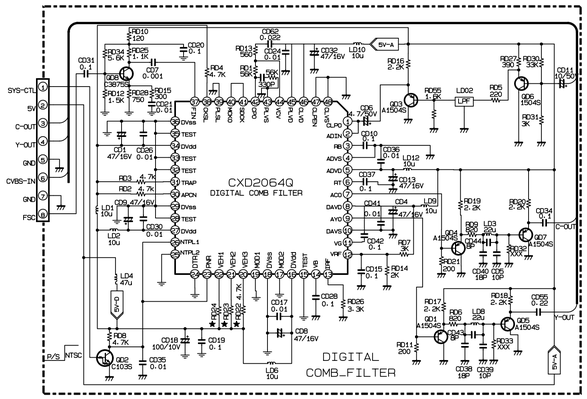

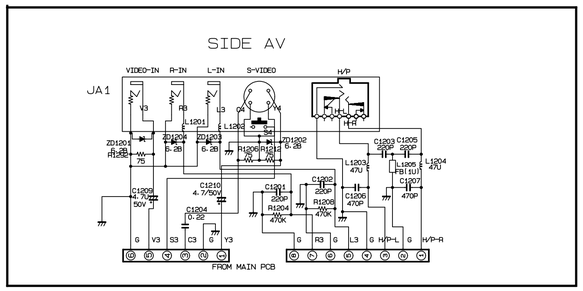

FROM MAIN PCB

NOTICE

Since this a basic circuit diagram, the value of components and some partial connection are subject to change for improvement.

The components marked ⚠ conform to VDE or IEC guide-lines and are essential for safe operation of the set. While those marked ⚠ are required for correct operation. Use specified parts only when replacing.

Value of resister, capacitor and inductor

1. Resistances are shown in ohm. K=1,000. M=1,000,000.
2. Unless otherwise noted in schematic, all capacitor values less than 1 are expressed in uF and the values more than 1 in pF. The sign of (M) in schematic means MYLAR CAPACITOR.
3. Unless otherwise noted in schematic, all inductor values more than 1 are expressed in uH.

Observation of voltage and waveforms

1. Voltages with VTVM from point shown to chassis ground. Signal pattern is color-bar.
2. The schematic shown is representative only.
3. All waveforms are taken using a wide band oscilloscope and a low capacity probe.
4. Check Fine tuning, AGC, Brightness, Contrast and Colour for best picture. make sure that Colour, Brightness are in mid position and Contrast is in 100%.

PRINTED CIRCUIT BOARD

MAIN

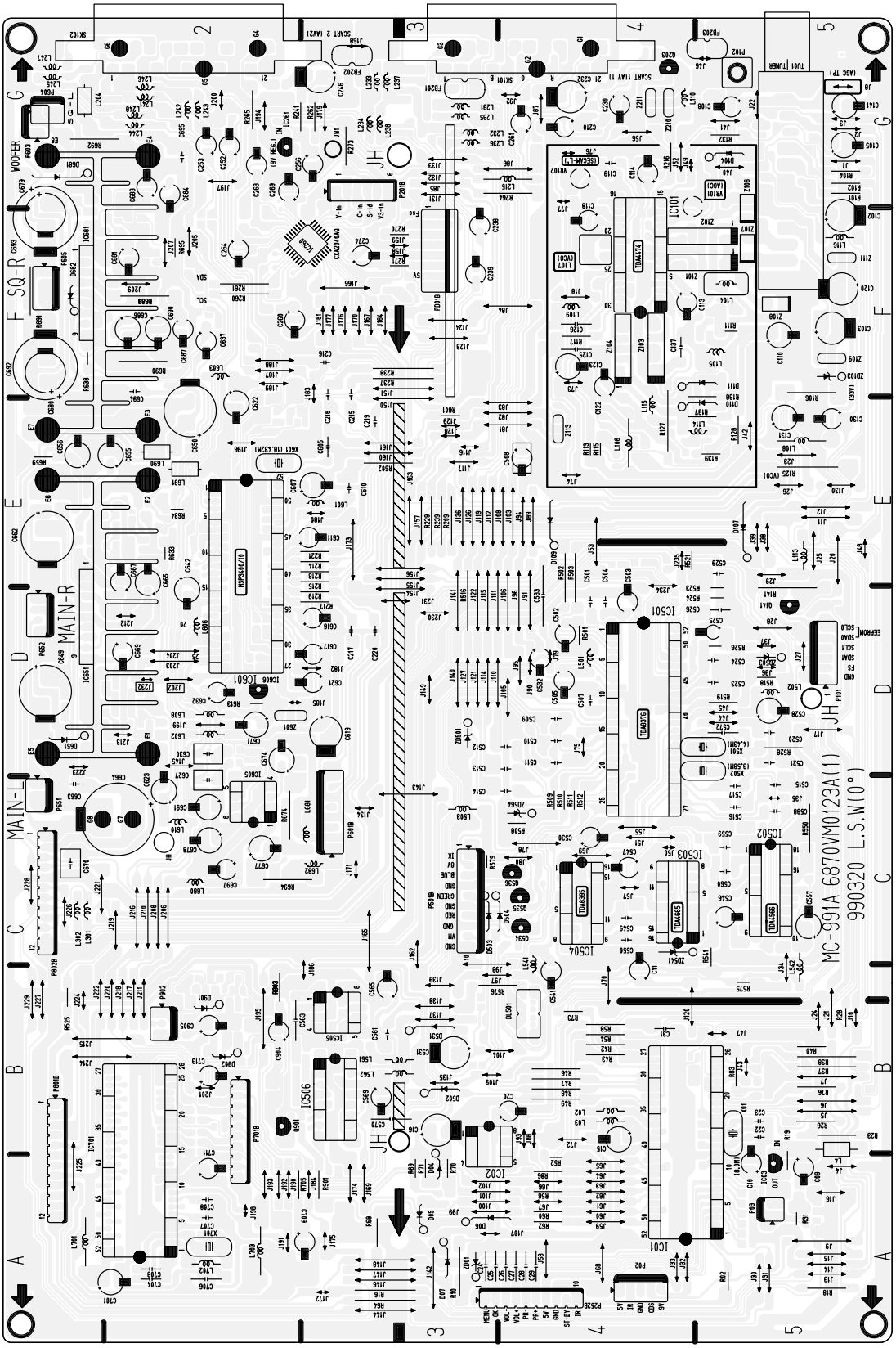

MAIN 2

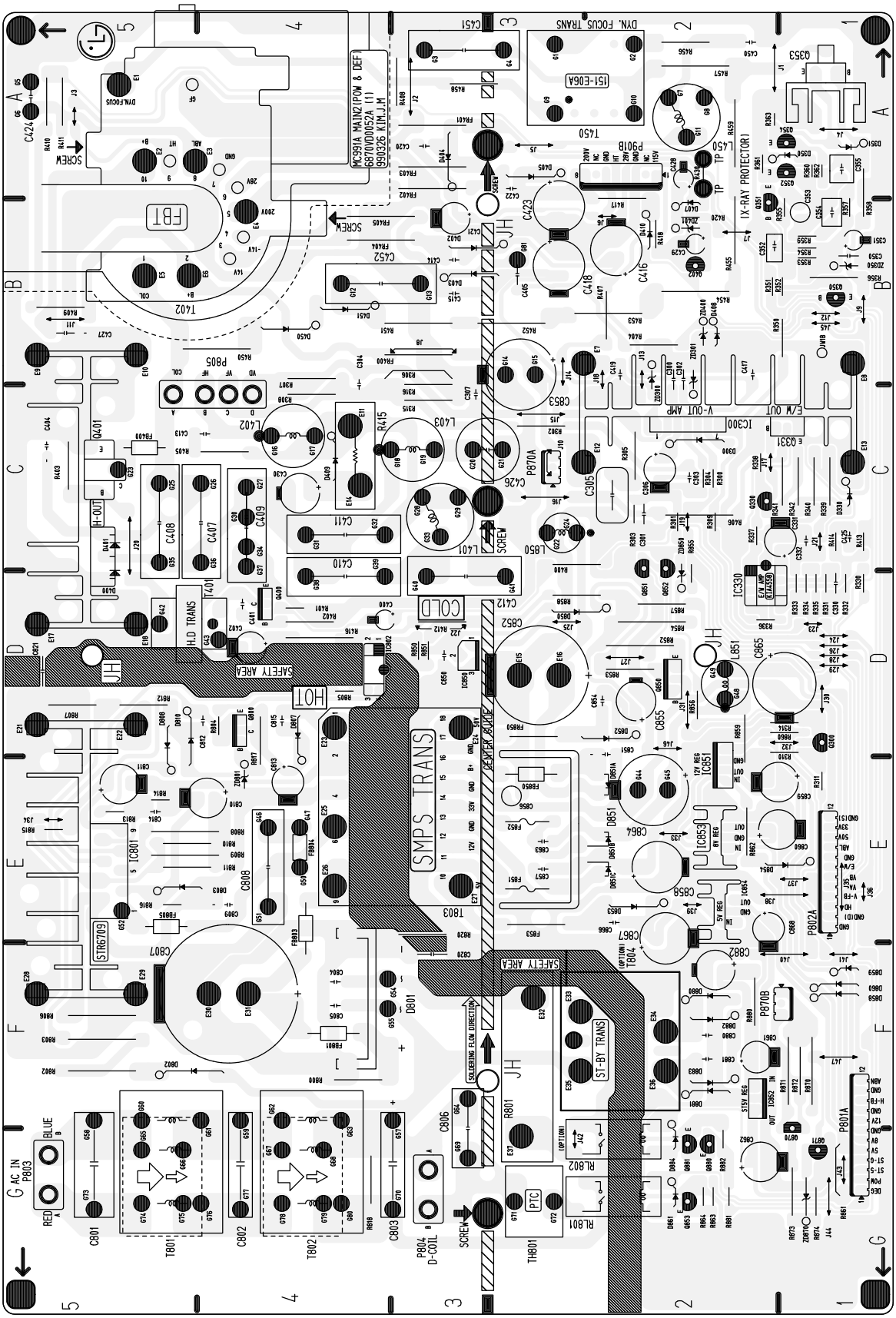
MC991A MAIN2(POW & DEF)
6870V00052A (1)
990326 KIM.J.M
SMPS TRANS
ST-BY TRANS
SAFETY AREA
HOT
COLD
CENTER BODE
SOLDERING FLOW DIRECTION
FBT
T402
DYN. FOCUS TRANS
DYN.FOCUS
H-OUT
H-D TRANS
STR6709
IC801
IC851
IC853
IC330
E/W OUT
V-OUT AMP
(X-RAY PROTECTOR)
AC IN
P803
BLUE
RED
P804
D-COIL
TH801
PTC
P801A
P802A
P870A
P870B
P805
P901B
T801
T802
T803
T804
T450
T401
T451
Q401
Q331
Q353
Q851
Q852
Q853
Q854
Q855
Q870
Q871
Q872
Q873
Q874
Q875
Q876
Q877
Q878
Q879
Q880
Q881
Q882
Q883
Q884
Q885
Q886
Q887
Q888
Q889
Q890
Q891
Q892
Q893
Q894
Q895
Q896
Q897
Q898
Q899
Q900
Q901
Q902
Q903
Q904
Q905
Q906
Q907
Q908
Q909

CPT

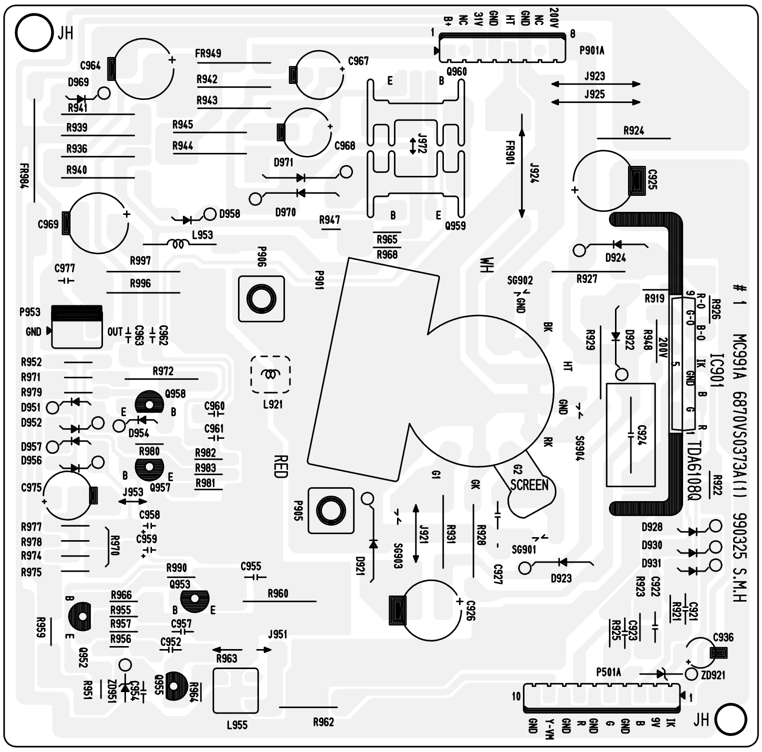

CONTROL

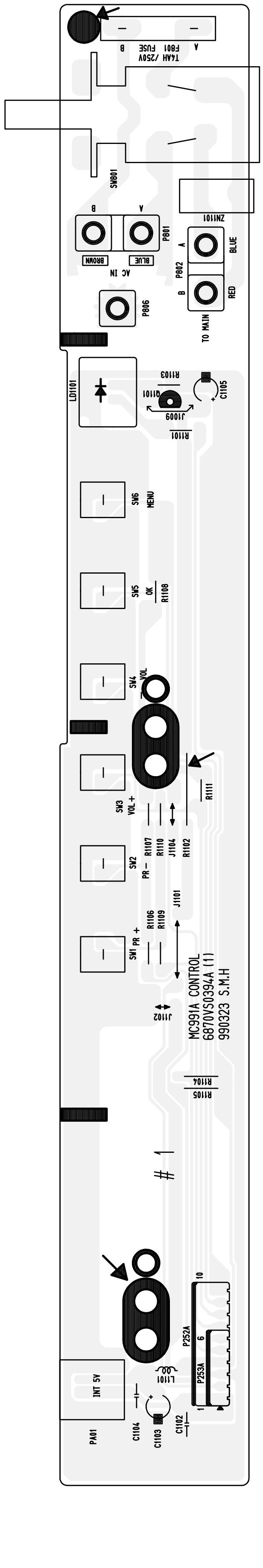

SIDE A/V

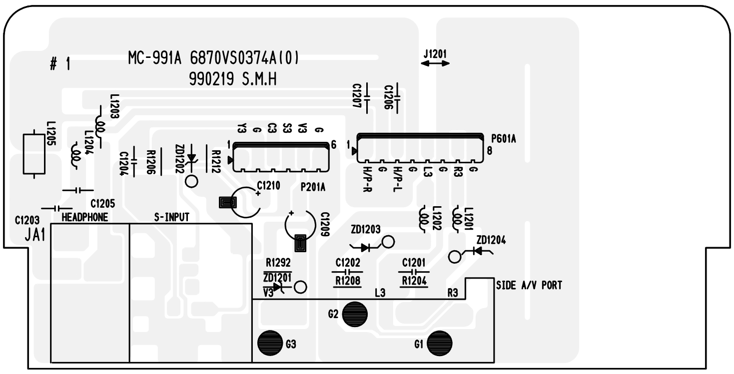

DCF

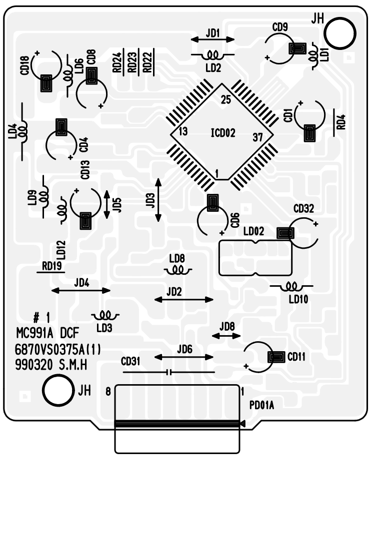

The components identified by mark ⚠ are critical for safety.
Replace only with part number specified.

REPLACEMENT PARTS LIST

LOCA. NO	PART NO	DESCRIPTION
IC		
D851	0ISK100300A	IC,SLA1003 SIP12 BK DIODE MODULE(
IC01	0ISO899316B	IC,LG8993-16B(CXP86441-567S) *ASIA
IC01	0ISO899321A	IC,LG8993-21A(CXP86441-569S) *ASIA
IC01	0ISO899324A	IC,LG8993-24A(CXP86441-571S) *EU
IC02	0ISG241600A	IC,ST24C16 8D EEPROM(16K)
ICD02	0ISO206400A	IC,CXD2064Q 48P,QFP BK 4H MULTI D
IC03	0ISS753300A	IC,KA7533Z RESET T0-92 TP 3.3V
IC101	0ITF447400A	IC,TDA4474(VIF)
IC260	0ISO204000A	IC,CXA2040AQ 32P,QFP BK IIC BUS V
IC261	0IKE780900H	IC,KIA78L09BP(AT) 3P 9V,150MA
IC300	0ISA784500A	IC,LA7845 7SIP V/OUT(1.5A)
IC330	0IKE455800E	IC,KIA4558 8DIP DUAL OP AMP
IC501	0IPH837600B	IC,TDA8376A 52P,SDIP BK MULTI VID
IC502	0IPH456620A	IC,TDA4566/V2 18D CTI
IC503	0IPH466550A	IC,TDA4665/V5 16DIP BK 1H DELAY L
IC504	0IPH839520A	IC,TDA8395P/N2 16D SECAM DETECT.
IC505	0IMO145770E	IC,MC14577CP 8D DUAL VIDEO AMP
IC506	0ISG511400A	IC,TEA5114A 16D RGB S/W
IC601	0IIT341000H	IC,MSP3410D 52P,SDIP BK B4-VERSIO
IC605	0ISG282200A	IC,TDA2822M 8D DUAL AUDIO AMP(1W)
IC606	0ISS753300A	IC,KA7533Z RESET T0-92 TP 3.3V
IC651	0IPH261600A	IC,TDA2616 STEREO AMP(20+20W)
IC701	0IPH528100F	IC,SAA5281ZP/E 52P,SDIP BK WEST
"	0IPH528100K	IC,SAA5281ZP/K 52P,SDIP BK EAST
"	0IPH528100H	IC,SAA5281ZP/H 52P,SDIP BK EAST
IC801	0ISK670900A	IC,STR/S6709 9S SMPS-CNTR
⚠ IC802	0ISH123200B	IC,PC123 FY2PHOTO COUPLER
IC850	0ISK115000A	IC,SE115N(LF12) 3P 115V ERROR AMP
IC851	0ISH122100A	IC,PQ12RF21 4P(TO-220) 12V S/W RE
IC852	0IKE780500K	IC,KIA7805PI 3P(TO-220IS) 5V,1A
IC853	0IKE780800A	IC,KIA7808PI 3P(TO-220IS) 1A,8V
IC854	0IKE780500K	IC,KIA7805PI 3P(TO-220IS) 5V,1A
IC901	0IPH610800A	IC,TDA6108JF 9SIP BK VIDEO OUT AM
DIODE		
D04	0DD414809ED	DIODE,1N4148 TA
D05	0DD414809ED	DIODE,1N4148 TA
D06	0DD414809ED	DIODE,1N4148 TA
D07	0DD414809ED	DIODE,1N4148 TA
D104	0DD414809ED	DIODE,1N4148 TA
D107	0DD414809ED	DIODE,1N4148 TA
D109	0DD414809ED	DIODE,1N4148 TA
D110	0DD859009AA	DIODE,MA859
D111	0DD859009AA	DIODE,MA859
D300	0DD150009CE	DIODE,GP15J TP (1.5A/600V) GI
D330	0DD247109AA	DIODE,DETECTOR 1S2471DETECT SW TP
D350	0DD414809ED	DIODE,1N4148 TA
D351	0DD414809ED	DIODE,1N4148 TA
D400	0DD011150AA	DIODE,ESC011M-15
D402	0DD150009CC	DIODE,RECTIFIER RGP15G,TP(52MM),GI
D403	0DD150009CC	DIODE,RECTIFIER RGP15G,TP(52MM),GI
D404	0DD150009CC	DIODE,RECTIFIER RGP15G,TP(52MM),GI
D405	0DD100009AE	DIODE,RECTIFIER RU1A V(1) TP SANKEN

LOCA. NO	PART NO	DESCRIPTION
D408	0DD414809ED	DIODE,1N4148 TA
D409	0DD150009CC	DIODE,RECTIFIER RGP15G,TP(52MM),GI
D410	0DD414809ED	DIODE,1N4148 TA
D450	0DD100009AQ	DIODE,RP1HV(1)
D451	0DD100009AQ	DIODE,RP1HV(1)
D502	0DD414809ED	DIODE,1N4148 TA
D503	0DD414809ED	DIODE,1N4148 TA
D504	0DD414809ED	DIODE,1N4148 TA
D505	0DD181009AB	DIODE,SWITCHING CHIP KDS181 85V 300MA KEC
D531	0DD414809ED	DIODE, 1N4148 TA
D651	0DD414809ED	DIODE, 1N4148 TA
D652	0DD181009AB	DIODE,SWITCHING CHIP KDS181 85V 300MA KEC
D653	0DD414809ED	DIODE, 1N4148 TA
D681	0DD414809ED	DIODE, 1N4148 TA
D682	0DD414809ED	DIODE, 1N4148 TA
D683	0DD181009AB	DIODE,SWITCHING CHIP KDS181 85V 300MA
D801	0DD560000AA	DIODE,RECTIFIER D5SB60 BRIDGE (5A/600V)
⚠ D802	0DD150009CE	DIODE,GP15J TP (1.5A/600V) GI
D803	0DD100009AL	DIODE,EH-1ZV(1)
D807	0DD060009AC	DIODE,TVR06J 0.6A/600V 250NS TP G.I
D808	0DD100009AM	DIODE,RECTIFIER EU1ZV(1) TP SANKEN
D810	0DD060009AC	DIODE,TVR06J 0.6A/600V 250NS TP G.I
D850	0DD060009AC	DIODE,TVR06J 0.6A/600V 250NS TP G.I
D852	0DD060009AC	DIODE,TVR06J 0.6A/600V 250NS TP G.I
D853	0DD200009AH	DIODE,RECTIFIER RU2AMV(1) TP SANKEN
D854	0DD060009AC	DIODE,TVR06J 0.6A/600V 250NS TP G.I
D858	0DD414809ED	DIODE,1N4148 TA
D860	0DD414809ED	DIODE,1N4148 TA
D861	0DD414809ED	DIODE,1N4148 TA
D880	0DD060009AC	DIODE,TVR06J 0.6A/600V
D881	0DD060009AC	DIODE,TVR06J 0.6A/600V
D882	0DD060009AC	DIODE,TVR06J 0.6A/600V
D883	0DD060009AC	DIODE,TVR06J 0.6A/600V
D884	0DD414809ED	DIODE,1N4148 TA
D901	0DD414809ED	DIODE,1N4148 TA
D902	0DD414809ED	DIODE,1N4148 TA
D921	0DD400309AD	DIODE,RECTIFIER IN4003A
D922	0DR210009AA	DIODE,RECTIFIER BAV21 TP DO-35 200V .
D923	0DR210009AA	DIODE,RECTIFIER BAV21 TP DO-35 200V .
D924	0DR210009AA	DIODE,RECTIFIER BAV21 TP DO-35 200V .
D928	0DD247109AA	DIODE,DETECTOR 1S2471DETECT SW TP
D930	0DD247109AA	DIODE,DETECTOR 1S2471DETECT SW TP
D931	0DD247109AA	DIODE,DETECTOR 1S2471DETECT SW TP
D951	0DD247109AA	DIODE,DETECTOR 1S2471DETECT SW TP
D952	0DD247109AA	DIODE,DETECTOR 1S2471DETECT SW TP
D954	0DD247109AA	DIODE,DETECTOR 1S2471DETECT SW TP
D956	0DD247109AA	DIODE,DETECTOR 1S2471DETECT SW TP
D957	0DD247109AA	DIODE,DETECTOR 1S2471DETECT SW TP
D958	0DD247109AA	DIODE,DETECTOR 1S2471DETECT SW TP
D969	0DD247109AA	DIODE,DETECTOR 1S2471DETECT SW TP
D970	0DD150009CC	DIODE,RECTIFIER RGP15G,TP(52MM),GI
D971	0DD150009CC	DIODE,RECTIFIER RGP15G,TP(52MM),GI
LD1101	162-002B	DIODE LED ASSY
ZD01	0DZ750009AA	DIODE ZENER MTZ7.5B,TP(52MM),ROHM
ZD103	0DZ330009BA	DIODE,ZENER HZT33(TP) HITACHI

For Capacitor & Resistors, the charactors at 2nd and 3rd digit in the P/No. means as follows;	CC, CX, CK, CN : Ceramic CQ : Polyestor CE : Electrolytic	RD : Carbon Film RS : Metal Oxide Film RN : Metal Film RF : Fusible

LOCA. NO	PART NO	DESCRIPTION
ZD300	0DZ180009AA	DIODE,ZENER MTZ18B,TP(52MM),ROHM
ZD301	0DZ180009AA	DIODE,ZENER MTZ18B,TP(52MM),ROHM
ZD350	0DZ120009AA	DIODE,ZENER MTZ12B 12V 10MA 0.5W
ZD400	0DZ750009AA	DIODE ZENER MTZ7.5B,TP(52MM),ROHM
ZD501	0DZ240009BC	DIODE,ZENER MTZ2.4B 2.4V K-ROHM TP
ZD503	0DZ750009AA	DIODE ZENER MTZ7.5B,TP(52MM),ROHM
ZD541	0DZ510009AB	DIODE,ZENER MTZ5.1B,TP(52MM),ROHM
ZD564	0DZ750009AA	DIODE ZENER MTZ7.5B,TP(52MM),ROHM
ZD801	0DZ750009AA	DIODE ZENER MTZ7.5B,TP(52MM),ROHM
ZD850	0DZ110009AA	DIODE,ZENER MTZ 11B,TP(52MM),ROHM
ZD921	0DZ750009AA	DIODE ZENER MTZ7.5B,TP(52MM),ROHM
ZD951	0DZ180009AA	DIODE,ZENER MTZ18B,TP(52MM),ROHM
ZD1201	0DZ620009AA	DIODE,ZENER MTZ6.2B,TP(52MM),ROHM
ZD1202	0DZ620009AA	DIODE,ZENER MTZ6.2B,TP(52MM),ROHM
ZD1203	0DZ620009AA	DIODE,ZENER MTZ6.2B,TP(52MM),ROHM
ZD1204	0DZ620009AA	DIODE,ZENER MTZ6.2B,TP(52MM),ROHM
TRANSISTOR		
Q01	0TR387500AA	CHIP 2SC3875S(ALY) KEC
Q02	0TR102009AG	CHIP KRC102S SOT-23 TP KEC
Q03	0TR102009AG	CHIP KRC102S SOT-23 TP KEC
Q04	0TR387500AA	CHIP 2SC3875S(ALY) KEC
Q11	0TR150400BA	CHIP 2SA1504S(ASY) KEC
Q102	0TR388109AA	KTC3881 CHIP KEC
Q103	0TR387500AA	CHIP 2SC3875S(ALY) KEC
Q105	0TR103009AG	CHIP KRC103S SOT-23
Q106	0TR387500AA	CHIP 2SC3875S(ALY) KEC
Q107	0TR387500AA	CHIP 2SC3875S(ALY) KEC
Q108	0TR387500AA	CHIP 2SC3875S(ALY) KEC
Q109	0TR103009AG	CHIP KRC103S SOT-23 TP KEC
Q150	0TR103009AG	CHIP KRC103S SOT-23 TP KEC
Q151	0TR103009AG	CHIP KRC103S SOT-23 TP KEC
Q201	0TR387500AA	CHIP 2SC3875S(ALY) KEC
Q203	0TR733009AA	KSA733C-Y
Q231	0TR150400BA	CHIP 2SA1504S(ASY) KEC
Q232	0TR150400BA	CHIP 2SA1504S(ASY) KEC
Q242	0TR150400BA	CHIP 2SA1504S(ASY) KEC
Q300	0TR945009AA	KSC945C-Y
Q330	0TR127409AB	KTA1274-Y TO-92L TP KEC
Q331	0TR205900AB	KTD2059-Y TO-220IS KEC
Q353	0TR471000AA	2SC4710 SANYO OTOROLA IBA
Q350	0TR945009AA	KSC945C-Y
Q351	0TR733009AA	KSA733C-Y
Q352	0TR945009AA	KSC945C-Y
Q354	0TR945009AA	KSC945C-Y
Q400	0TR223800AA	KTC2238A-Y
Q401	0TR188700AA	2SD1887 TO-3PML SANYO
Q530	0TR387500AA	CHIP 2SC3875S(ALY) KEC
Q531	0TR150400BA	CHIP 2SA1504S(ASY) KEC
Q532	0TR102009AG	CHIP KRC102S SOT-23 TP KEC
Q533	0TR150400BA	CHIP 2SA1504S(ASY) KEC
Q534	0TR733009AA	KSA733C-Y
Q535	0TR733009AA	KSA733C-Y
Q536	0TR733009AA	KSA733C-Y

LOCA. NO	PART NO	DESCRIPTION
Q601	0TR150400BA	CHIP 2SA1504S(ASY) KEC
Q602	0TR150400BA	CHIP 2SA1504S(ASY) KEC
Q603	0TR150400BA	CHIP 2SA1504S(ASY) KEC
Q604	0TR150400BA	CHIP 2SA1504S(ASY) KEC
Q641	0TR387500AA	CHIP 2SC3875S(ALY) KEC
Q642	0TR387500AA	CHIP 2SC3875S(ALY) KEC
Q651	0TR387500AA	CHIP 2SC3875S(ALY) KEC
Q660	0TR150400BA	CHIP 2SA1504S(ASY) KEC
Q661	0TR150400BA	CHIP 2SA1504S(ASY) KEC
Q681	0TR387500AA	CHIP 2SC3875S(ALY) KEC
Q800	0TR209200AB	KTD2092(CU-STICK) TO-220IS KEC
Q850	0TR968000AA	KTA968A-Y KEC
Q851	0TR322809AA	KTC3228-0 TP(KTC2383),KEC
Q852	0TR945009AA	KSC945C-Y
Q853	0TR320209AA	KTC3202-TP-Y (KTC1959)KEC
Q880	0TR319809AA	KTC3198-TP-Y (KTC1815)KEC
Q881	0TR322709AA	KTC3227-Y
Q901	0TR945009AA	KSC945C-Y
Q902	0TR387500AA	CHIP 2SC3875S(ALY) KEC
Q903	0TR150400BA	CHIP 2SA1504S(ASY) KEC
Q904	0TR150400BA	CHIP 2SA1504S(ASY) KEC
Q905	0TR387500AA	CHIP 2SC3875S(ALY) KEC
Q906	0TR387500AA	CHIP 2SC3875S(ALY) KEC
Q907	0TR150400BA	CHIP 2SA1504S(ASY) KEC
Q908	0TR150400BA	CHIP 2SA1504S(ASY) KEC
Q952	0TR320209AA	KTC3202-TP-Y (KTC1959)KEC
Q953	0TR320209AA	KTC3202-TP-Y (KTC1959)KEC
Q957	0TR127009AA	KTA1270-Y (KTA562TM) TP KEC
Q958	0TR322709AA	KTC3227-Y,TP(KTC1627A),KEC
Q1101	0TR733009AA	KSA733C-Y
Q2909	0TR968000AA	KTA968A-Y KEC
Q2910	0TR223800AA	KTC2238A-Y
QD1	0TR150400BA	CHIP 2SA1504S(ASY) KEC
QD2	0TR103009AG	CHIP KRC103S SOT-23 TP KEC
QD3	0TR150400BA	CHIP 2SA1504S(ASY) KEC
QD4	0TR150400BA	CHIP 2SA1504S(ASY) KEC
QD5	0TR150400BA	CHIP 2SA1504S(ASY) KEC
QD6	0TR150400BA	CHIP 2SA1504S(ASY) KEC
QD6	0TR387500AA	CHIP 2SC3875S(ALY) KEC
QD7	0TR150400BA	CHIP 2SA1504S(ASY) KEC
QD8	0TR387500AA	CHIP 2SC3875S(ALY) KEC
CAPACITOR		
C09	0CE106DF618	10UF STD 16V M
C10	0CE335DK618	3.3000UF STD 50V M
C11	0CE476DF618	47UF STD 16V M
C11	0CE476DF618	47UF STD 16V M
C15	0CE107DD618	100UF STD 10V M
C16	0CE227DF618	220UF STD 16V M
C20	0CE476DF618	47UF STD 16V M
C22	0CC1500K415	15P 50V J
C23	0CC1500K415	15P 50V J
C24	0CN1010K519	100P 50V K
C25	0CN1010K519	100P 50V K

For Capacitor & Resistors, the charactors at 2nd and 3rd digit in the P/No. means as follows;	CC, CX, CK, CN : Ceramic CQ : Polyestor CE : Electrolytic	RD : Carbon Film RS : Metal Oxide Film RN : Metal Film RF : Fusible

LOCA. NO	PART NO	DESCRIPTION
C26	0CN1010K519	100P 50V K
C27	0CN1010K519	100P 50V K
C28	0CN1010K519	100P 50V K
C29	0CN1010K519	100P 50V K
C31	0CX6200K409	62P 50V J
C102	0CE227DD618	220UF STD 10V M
C103	0CE476DK618	47UF STD 50V M
C105	0CE225DK618	2.2000UF STD 50V M
C108	0CE225DK618	2.2000UF STD 50V M
C108	0CE476DF618	47UF STD16V M *CL-
C110	0CE476DF618	47UF STD 16V M
C113	0CE106DF618	10UF STD 16V M
C114	0CSZVTA001F	35V 0.68UFK
C114	0CSZVTA001C	TAP105K025BRS *CL-
C118	0CE225DK618	2.2000UF STD 50V M
C119	0CQ4742K439	0.4700UF S 50V J
C120	0CE227DD618	220UF STD 10V M
C122	0CE107DD618	100UF STD 10V M
C123	0CE104DK618	0.1000UF STD 50V M
C125	0CN1030F679	10000P 16V M
C126	0CX4700K409	47P 50V J SL TA52
C130	0CE106DF618	10UF STD 16V M
C131	0CE107DD618	100UF STD 10V M
C137	0CN1030F679	10000P 16V M Y
C141	0CE225DK618	2.2000UF STD 50V M
C210	0CE476DF618	47UF STD 16V M
C215	0CQ3342K439	0.3300UF S 50V J
C216	0CQ3342K439	0.3300UF S 50V J
C217	0CQ3342K439	0.3300UF S 50V J
C218	0CQ3342K439	0.3300UF S 50V J
C219	0CQ3342K439	0.3300UF S 50V J
C220	0CQ3342K439	0.3300UF S 50V J
C230	0CE106DF618	10UF STD 16V M
C232	0CE227DF618	220UF STD 16V M
C238	0CE226DF618	22UF STD 16V M
C239	0CE226DF618	22UF STD 16V M
C246	0CE227DF618	220UF STD 16V M
C252	0CE226DF618	22UF STD 16V M
C253	0CE226DF618	22UF STD 16V M
C256	0CE476DF618	47UF STD 16V M
C260	0CE106DF618	10UF STD 16V M
C261	0CE106DF618	10UF STD 16V M
C263	0CE106DF618	10UF STD 16V M
C264	0CE107DF618	100UF STD 16V M
C269	0CE336DF618	33UF STD 16V M
C274	0CE106DK618	10UF STD 50V M
C301	0CN5610K519	560P 50V K
C302	0CN2710K519	270P 50V K
C303	0CQ8221N519	0.0082U 100V K
C304	0CQ6831N509	0.068U 100V K
C305	0CQ3341N401	0.33U 100V J
C306	0CE107DJ618	100UF STD 35V M
C307	0CQ1021N519	0.001U 100V K
C330	0CN4710K519	470P 50V K

LOCA. NO	PART NO	DESCRIPTION
C331	0CE107DJ618	100UF STD 35V M
C332	0CQ1031N509	0.01U 100V K
C350	0CN1040K949	0.1M 50V Z
C351	0CE107DF618	100UF STD 16V M
C352	0CQ3342K439	0.3300UF S 50V J
C353	181-064P	CE BP 16V 10 MFTR
C354	0CQ1052K439	1UF S 50V J
C355	0CQ5642K439	0.5600UF S 50V J
C400	0CE474DK618	0.4700UF STD 50V M
C401	0CK2220W515	2200P 500V K B
C402	0CE475BP618	4.7000UF KME 160V M
C404	181-091W	2KV R 471K TP7.5
C405	181-009R	PP 200V 0.022UF K
C407	181-015M	MPP 1600V 0.01UF H
C408	181-015M	MPP 1600V 0.01UF H
C409	0CQZVBK004B	0.027UF D 630V J
C410	181-013N	MPP 400V 0.27UF J
C411	181-013P	MPP 400V 0.33UF J
C412	181-013T	MPP 400V 0.70UF J
C413	0CK2220W515	2200P 500V K
C414	181-091C	R 471K 1KV TP5
C415	181-091C	R 471K 1KV TP5
C416	0CE1086H618	1000U SMS 25V M
C417	0CQ1031N509	0.01U 100V K
C418	0CE1086H618	1000U SMS 25V M
C419	0CQ1031N509	0.01U 100V K
C420	0CK56101515	560P 1KV K B TS
C421	0CE107DK618	100UF STD 50V M
C422	0CK56101515	560P 1KV K B TS
C423	0CE476DR618	47UF STD 250V M
C424	181-009D	PP 200V 0.068UF J
C425	0CQ1531N509	0.015U 100V K
C426	0CE5651K652	5.6000UF SM 50V M
C427	181-033T	2KV B 222K TP7.5
C430	0CE106BR618	10UF KME 250V M
C450	0CQ1041N509	0.1U 100V K
C451	181-015K	MPP 1600V 0.0091UF H
C452	181-014N	MPP 1600V 0.01UF J
C501	0CQ1042K439	0.1000UF S 50V J
C502	0CE475DK618	4.7000UF STD 50V M
C503	0CE105DK618	1UF STD 50V M
C504	0CQ1042K439	0.1000UF S 50V J
C505	0CE476DF618	47UF STD 16V M
C507	0CQ1042K439	0.1000UF S 50V J
C508	0CE225DK618	2.2000UF STD 50V M
C508	0CQ4742K439	0.4700UF S 50V J
C509	0CQ1042K439	0.1000UF S 50V J
C510	0CQ1042K439	0.1000UF S 50V J
C511	0CQ1042K439	0.1000UF S 50V J
C512	0CQ1042K439	0.1000UF S 50V J
C513	0CQ1042K439	0.1000UF S 50V J
C514	0CQ1042K439	0.1000UF S 50V J
C515	0CQ3342K439	0.3300UF S 50V J
C516	0CQ1042K439	0.1000UF S 50V J

For Capacitor & Resistors, the charactors at 2nd and 3rd digit in the P/No. means as follows;

CC, CX, CK, CN : Ceramic
CQ : Polyestor
CE : Electrolytic

RD : Carbon Film
RS : Metal Oxide Film
RN : Metal Film
RF : Fusible

The components identified by mark ⚠ are critical for safety.
Replace only with part number specified.

LOCA. NO	PART NO	DESCRIPTION
C517	0CQ1042K439	0.1000UF S 50V J
C520	0CQ1021N509	0.001U 100V K
C520	0CQ4721N509	0.0047U 100V K
C521	0CQ1042K439	0.1000UF S 50V J
C523	0CQ2221N509	0.0022U 100V K
C524	0CQ4721N509	0.0047U 100V K
C525	0CSZVTA001C	25V 1UF K
C526	0CQ1041N455	0.1000UF 100V J
C528	0CE107DF618	100UF STD 16V M
C529	0CQ1042K439	0.1000UF S 50V J
C530	0CE105DK618	1UF STD 50V M
C531	0CE225DK618	2.2000UF STD 50V M
C532	0CE225DK618	2.2000UF STD 50V M
C533	0CN1040K949	0.1M 50V Z
C541	0CE476DF618	47UF STD 16V M
C546	0CE476DF618	47UF STD 16V M
C547	0CE476DF618	47UF STD 16V M
C549	0CQ1042K439	0.1000UF S 50V J
C550	0CQ1042K439	0.1000UF S 50V J
C557	0CE107DF618	100UF STD 16V M
C557	0CE337DF618	330UF STD 16V M
C559	0CQ4742K439	0.4700UF S 50V J
C560	0CQ4742K439	0.4700UF S 50V J
C561	0CQ4742K439	0.4700UF S 50V J
C563	0CN1040K949	0.1M 50V Z
C565	0CE476DF618	47UF STD 16V M
C569	0CE476DF618	47UF STD 16V M
C570	0CN1040K949	0.1M 50V Z
C572	0CN1030F679	10000P 16V M
C577	0CN3310K519	330P 50V K
C588	0CQ3342K439	0.3300UF S 50V J
C605	0CN1030F679	10000P 16V M
C607	0CE106DF618	10UF STD 16V M
C607	0CE107DD618	100UF STD 10V M
C611	0CE106DF618	10UF STD 16V M
C616	0CE106DF618	10UF STD 16V M
C617	0CE106DF618	10UF STD 16V M
C619	0CE227DF618	220UF STD 16V M
C621	0CE106DF618	10UF STD 16V M
C622	0CE107DF618	100UF STD 16V M
C623	0CE476DF618	47UF STD 16V M
C627	0CQ4742K439	0.4700UF S 50V J
C630	0CQ4742K439	0.4700UF S 50V J
C632	0CE106DF618	10UF STD 16V M
C632	0CE335DK618	3.3000UF STD 50V M
C637	0CQ6831N509	0.068U 100V K
C642	0CE476DF618	47UF STD 16V M
C649	0CE108DJ618	1000UF STD 35V M
C650	0CE477DK618	470UF STD 50V M
C655	0CE474DK618	0.4700UF STD 50V M
C655	0CQ1042K439	0.1UF S 50V J *CL-,CE-
C656	0CE106DF618	10UF STD 16V M
C656	0CQ1042K439	0.1UF S 50V J *CL-,CE-
C662	0CE108DJ618	1000UF STD 35V M

LOCA. NO	PART NO	DESCRIPTION
C663	0CQ1042K439	0.1000UF S 50V J
C664	0CE228DK650	2200UF STD 50V M
C665	0CE107DH618	100UF STD 25V M
C667	0CE225DK618	2.2000UF STD 50V M
C669	0CE225DK618	2.2000UF STD 50V M
C670	0CQ4742K439	0.4700UF S 50V J
C671	0CE227DD618	220UF STD 10V M
C674	0CE107DF618	100UF STD 16V M
C677	0CE107DF618	100UF STD 16V M
C678	0CE107DF618	100UF STD 16V M
C679	0CE227DK618	220UF STD 50V M
C680	0CE227DK618	220UF STD 50V M
C681	0CQ6831N509	0.068U 100V K
C683	0CE105DK618	1UF STD 50V M
C683	0CQ1042K439	0.1UF S 50V J *CL-,CE-
C684	0CE474DK618	0.4700UF STD 50V M
C684	0CQ1042K439	0.1UF S 50V J *CL-,CE-
C686	0CE476DK618	47UF STD 50V M
C691	0CE107DF618	100UF STD 16V M
C694	0CQ1042K439	0.1000UF S 50V J
C697	0CE476DF618	47UF STD 16V M
C701	0CE107DF618	100UF STD 16V M
C703	0CX1800K409	18P 50V J
C704	0CX8R20K509	8.2P 50V K
C706	0CN1040K949	0.1M 50V Z
C707	0CQ1042K439	0.1000UF S 50V J
C708	0CQ1042K439	0.1000UF S 50V J
C709	0CE105DK618	1UF STD 50V M
C711	0CE476DF618	47UF STD 16V M
C713	0CE476DF618	47UF STD 16V M
⚠ C801	0CQZVBK002B	A.C 275V 0.15UF K
C802	0CQZVBK002B	A.C 275V 0.15UF K
⚠ C803	0CQZVBK002B	A.C 275V 0.15UF K
C804	181-091R	1KV R 102K TP5
C805	181-091R	1KV R 102K TP5
⚠ C806	0CQZVBK002A	A.C 275V 0.1UF M
C807	181-001U	CE 450V 470UF M
C807	181-001Y	CE 450V 330UF M *CL-,CE-
C808	181-014W	MPP 2KV 0.0033UF J
C809	181-091W	2KV R 471K TP7.5
C810	0CE477BF618	470UF KME 16V M
C811	0CE227BJ618	220U KME 35V M
C812	0CK4710W515	470PF 500V K
C813	0CE226BN618	22UF KME 100V M
C814	0CK1020K515	1000PF 50V K
C815	181-091C	R 471K 1KV TP5
⚠ C820	181-120K	ACT 4KV E 222M FL10
C850	0CQ1041N509	0.1U 100V K
C851	181-091D	R 102K 1KV TP5
C852	181-003D	CE 160V 100UF T
C853	0CE2276P61A	220UF SMS 160V M
C854	181-091C	R 471K 1KV TP5
C855	0CE476DN618	47UF STD 100V M
C856	0CE1051K636	1UF SM 50V M

The components identified by mark ⚠ are critical for safety.
Replace only with part number specified.

For Capacitor & Resistors, the charactors at 2nd and 3rd digit in the P/No. means as follows;

CC, CX, CK, CN : Ceramic
CQ : Polyestor
CE : Electrolytic

RD : Carbon Film
RS : Metal Oxide Film
RN : Metal Film
RF : Fusible

LOCA. NO	PART NO	DESCRIPTION
C857	0CK4710W515	470PF 500V K
C858	0CE108DF618	1000UF STD 16V M
C859	0CE108DF618	1000UF STD 16V M
C859	0CE477DF618	470UF STD 16V M
C860	0CE477DF618	470UF STD 16V M
C861	0CE337DK618	330UF STD 50V M
C862	0CE477DD618	470UF STD 10V M
C863	181-091C	R 471K 1KV TP5
C864	0CE228DK650	2200UF STD 50V M
C865	0CE108DK61A	1000UF STD 50V M
C866	0CK4710W515	470PF 500V K
C867	0CE108DD618	1000UF STD 10V M
C867	0CE108DF618	1000UF STD 16V M
C868	0CE108DD618	1000UF STD 10V M
C868	0CE477DD618	470UF STD 10V M
C869	0CN1010K519	100P 50V K
C880	0CK1020W515	1000P 500V K
C881	0CK1020W515	1000P 500V K
C882	0CE477DH618	470UF STD 25V M
C904	0CE105DK618	1UF STD 50V M
C905	0CE476DF618	47UF STD 16V M
C921	0CN1010K519	100P 50V K
C922	0CN1010K519	100P 50V K
C923	0CN1010K519	100P 50V K
C924	0CQZVBK002A	A.C 275V 0.1UF M (S=15)
C925	0CE475DR618	4.7000UF STD 250V M
C926	0CE106DR618	10UF STD 250V M
C927	181-033T	2KV B 222K TP7.5
C936	0CE106DF618	10UF STD 16V M
C952	0CN1040K949	0.1M 50V Z
C954	0CN1040K949	0.1M 50V Z
C955	0CN3310K519	330P 50V K
C957	0CN2210K519	220P 50V K
C959	0CE684DK618	0.6800UF STD 50V M
C960	0CC1010K415	100P 50V J
C961	0CC1010K415	100P 50V J
C962	0CK4720W510	4700P 500V K
C963	0CK4720W510	4700P 500V K
C964	0CE106DP618	10UF STD 160V M
C967	0CE106DN618	10UF STD 100V M
C968	0CE106DN618	10UF STD 100V M
C969	0CE106DP618	10UF STD 160V M
C975	0CE476DK618	47UF STD 50V M
C977	0CK1810W515	180P 500V K
C1105	0CE475DK618	4.7000UF STD 50V M
C1201	0CN2210K519	220P 50V K
C1202	0CN2210K519	220P 50V K
C1203	0CN2210K519	220P 50V K
C1204	0CN1040K949	0.1M 50V Z
C1205	0CN2210K519	220P 50V K
C1206	0CN4710K519	470P 50V K
C1207	0CN4710K519	470P 50V K
C1208	0CN2210K519	220P 50V K
C1209	0CE475DK618	4.7000UF STD 50V M

LOCA. NO	PART NO	DESCRIPTION
C1210	0CE475DK618	4.7000UF STD 50V M
C1211	0CN2210K519	220P 50V K
CD1	0CE476DF618	47UF STD 16V M
CD4	0CE476DF618	47UF STD 16V M
CD6	0CE106DF618	10UF STD 16V M
CD8	0CE476DF618	47UF STD 16V M
CD9	0CE476DF618	47UF STD 16V M
CD11	0CE106DF618	10UF STD 16V M
CD13	0CE476DF618	47UF STD 16V M
CD18	0CE107DD618	100UF STD 10V M
CD31	0CN1040K949	0.1M 50V Z
CD32	0CE476DF618	47UF STD 16V M
CORE		
FB201	125-123A	CORE (CIRC),FERRITE BFD3565R2F(TAPING)
FB400	125-022K	CORE (CIRC),FERRITE 1UH TAPING
FB801	125-022K	CORE (CIRC),FERRITE 1UH TAPING
FB803	125-022K	CORE (CIRC),FERRITE 1UH TAPING
FB804	125-022K	CORE (CIRC),FERRITE 1UH TAPING
FB805	125-022K	CORE (CIRC),FERRITE 1UH TAPING
FB850	125-022K	CORE (CIRC),FERRITE 1UH TAPING
J171	125-022K	CORE (CIRC),FERRITE 1UH TAPING
L4	125-022K	CORE (CIRC),FERRITE 1UH TAPING
L201	125-022K	CORE (CIRC),FERRITE 1UH TAPING
L204	125-022K	CORE (CIRC),FERRITE 1UH TAPING
L504	125-022K	CORE (CIRC),FERRITE 1UH TAPING
L507	125-022K	CORE (CIRC),FERRITE 1UH TAPING
L509	125-022K	CORE (CIRC),FERRITE 1UH TAPING
L690	125-022K	CORE (CIRC),FERRITE 1UH TAPING
L921	125-123A	CORE (CIRC),FERRITE BFD3565R2F(TAPING)
L953	125-022K	CORE (CIRC),FERRITE 1UH TAPING
L1205	125-022K	CORE (CIRC),FERRITE 1UH TAPING
L1206	125-022K	CORE (CIRC),FERRITE 1UH TAPING
FUSE		
⚠ F801	131-098B	FUSE,4000MA 250 V 5.2X20 CY/GL SEMK
⚠ F851	131-096D	FUSE,3000MA 125 V 2.5X7.6 CY/CE UL
⚠ F852	131-096N	FUSE,4000MA 125 V 2.5X7.6 CY/CE UL
⚠ F853	131-096D	FUSE,3000MA 125 V 2.5X7.6 CY/CE UL
COIL & TRANSFORMER		
DL501	150-B02K	COIL,L/C FILTER(05W) EQF
L02	0LA0821K119	INDUCTOR,8.2UH K
L03	0LA0561K119	INDUCTOR,5.6UH K
L104	150-C01G	COIL,CHOKE 1.0UH A
L105	0LA0470K119	INDUCTOR,0.47UH K
L106	0LA0102K139	INDUCTOR,10UH K
L107	150-E11G	COIL,IFT VAR,38.9MHZ(VCO)
L108	0LA0102K139	INDUCTOR,10UH K
L109	0LA0152K119	INDUCTOR,15UH K
L110	0LA0681K119	INDUCTOR,6.8UH K
L113	0LA0102K119	INDUCTOR,10UH K
L114	0LA0102K119	INDUCTOR,10UH K

For Capacitor & Resistors, the charactors at 2nd and 3rd digit in the P/No. means as follows;	CC, CX, CK, CN : Ceramic CQ : Polyestor CE : Electrolytic	RD : Carbon Film RS : Metal Oxide Film RN : Metal Film RF : Fusible

The components identified by mark ⚠ are critical for safety.
Replace only with part number specified.

LOCA. NO	PART NO	DESCRIPTION
L115	0LA0102K119	INDUCTOR,10UH K
L215	0LA0102K119	INDUCTOR,10UH K
L231	0LA0102K119	INDUCTOR,10UH K
L232	0LA0102K119	INDUCTOR,10UH K
L233	0LA0102K119	INDUCTOR,10UH K
L234	0LA0102K119	INDUCTOR,10UH K
L235	0LA0102K119	INDUCTOR,10UH K
L236	0LA0102K119	INDUCTOR,10UH K
L237	0LA0102K119	INDUCTOR,10UH K
L238	0LA0102K119	INDUCTOR,10UH K
L241	0LA0102K119	INDUCTOR,10UH K
L242	0LA0102K119	INDUCTOR,10UH K
L243	0LA0102K119	INDUCTOR,10UH K
L244	0LA0102K119	INDUCTOR,10UH K
L245	0LA0102K119	INDUCTOR,10UH K
L246	0LA0102K119	INDUCTOR,10UH K
L247	0LA0102K119	INDUCTOR,10UH K
L248	0LA0102K119	INDUCTOR,10UH K
L301	0LA1000K119	INDUCTOR,100UH K
L302	0LA1000K119	INDUCTOR,100UH K
L401	150-W01A	COIL,WIDTH 24UH
L402	6140VE0001J	COIL,H-LINEARITY 20UH
L403	150-717J	COIL,CHOKE 560UH (E/W)
L450	150-W01D	COIL,WIDTH 3600UH
L501	0LA0471K119	INDUCTOR,4.7UH K
L502	0LA0102K119	INDUCTOR,10UH K
L503	0LA0102K119	INDUCTOR,10UH K
L541	0LA0102K119	INDUCTOR,10UH K
L542	0LA0102K119	INDUCTOR,10UH K
L561	0LA0102K119	INDUCTOR,10UH K
L562	0LA0102K119	INDUCTOR,10UH K
L601	0LA1000K119	INDUCTOR,100UH K
L602	0LA0102K119	INDUCTOR,10UH K
L603	0LA0102K119	INDUCTOR,10UH K
L606	0LA0102K119	INDUCTOR,10UH K
L608	0LA0102K119	INDUCTOR,10UH K
L610	0LA0102K119	INDUCTOR,10UH K
L680	0LA0102K119	INDUCTOR,10UH K
L681	0LA1000K119	INDUCTOR,100UH K
L682	0LA1000K119	INDUCTOR,100UH K
L701	0LA0102K139	INDUCTOR,10UH K
L702	0LA0331K119	INDUCTOR,3.3UH K
L703	0LA0102K139	INDUCTOR,10UH K
L850	150-C02F	COIL,CHOKE 82UH
L851	150-C02F	COIL,CHOKE 82UH
L1201	0LA0472K119	INDUCTOR,47UH K
L1202	0LA0472K119	INDUCTOR,47UH K
L1203	0LA0472K119	INDUCTOR,47UH K
L1204	0LA0472K119	INDUCTOR,47UH K
LD1	0LA0102K119	INDUCTOR,10UH K
LD2	0LA0102K119	INDUCTOR,10UH K
LD3	0LA0222K119	INDUCTOR,22UH K
LD4	0LA0222K119	INDUCTOR,22UH K
LD6	0LA0102K119	INDUCTOR,10UH K

LOCA. NO	PART NO	DESCRIPTION
LD8	0LA0222K119	INDUCTOR,22UH K
LD9	0LA0102K119	INDUCTOR,10UH K
LD10	0LA0102K119	INDUCTOR,10UH K
LD12	0LA0102K119	INDUCTOR,10UH K
T401	151-C02F	TRANSFORMER,H-DRIVE,EI-19,BULK
T450	151-E06A	TRANSFORMER,DBF,EER-2834,BULK
⚠ T801	150-F06J	COIL,LINE FILTER SQE2930
⚠ T802	150-F06J	COIL,LINE FILTER SQE2930
⚠ T803	6170VMCA01R	TRANSFORMER,SMPS EER5345 370UH
T804	151-D02F	TRANSFORMER,ST-BY
CONNECTOR		
P02	387-A05F	CONNECTOR ASSY,5P (L=350)
P201A	387-B06K	CONNECTOR ASSY,6P(L=600)
P252A	387-812J	CONNECTOR ASSY,YJN250 10P
P501A	387-B10J	CONNECTOR ASSY,10P(L=500)
P601A	387-B08H	CONNECTOR ASSY,8P SHIELD(450)
P801A	387-812L	CONNECTOR ASSY,YJN250 12P
P802A	387-812L	CONNECTOR ASSY,YJN250 12P
P901A	387-A08J	CONNECTOR ASSYY,8P (L=500)
RESISTOR		
⚠ FR400	0RS0470K607	0.47 2W 5% TA62
⚠ FR401	180-D02U	3.3OHM 2 W 5%
⚠ FR402	0RF0101J607	1 1W 5% TA62
⚠ FR403	0RF0470K607	0.47 2W 5% TA62
⚠ FR404	0RF0101K607	1 2W 5% TA62
⚠ FR405	0RF0141K607	1.40 OHM 2 W 5% TA62
FR850	0RF0470H609	0.47 1/2W 5 TA52
FR901	180-D02V	3.9 OHM 2 W 5% TA62
FR949	0RF1000H609	100 1/2W 5 TA52
FR984	0RF0102J607	10 1W 5% TA62
J48	0RD1000F609	100 1/6W 5 TA52
R02	0RD1000F609	100 1/6W 5 TA52
R10	0RD1500H609	150 1/2W 5 TA52
R16	0RD1002F609	10K 1/6W 5 TA52
R19	0RD1001F609	1.0K 1/6W 5 TA52
R23	0RD1000F609	100 1/6W 5 TA52
R26	0RD1003F609	100K 1/6W 5 TA52
R28	0RD1003F609	100K 1/6W 5 TA52
R31	0RD4701F609	4.70K 1/6W 5% TA52
R37	0RD1000F609	100 1/6W 5 TA52
R38	0RD1000F609	100 1/6W 5 TA52
R40	0RD1000F609	100 1/6W 5 TA52
R42	0RD4701F609	4.70K 1/6W 5% TA52
R43	0RD4701F609	4.70K 1/6W 5% TA52
R43	0RD4701F609	4.70K 1/6W 5% TA52
R46	0RD5600F609	560 1/6W 5 TA52
R47	0RD5600F609	560 1/6W 5 TA52
R48	0RD5600F609	560 1/6W 5 TA52
R49	0RD4700F609	470 1/6W 5 TA52
R52	0RD1000F609	100 1/6W 5 TA52
R54	0RD1000F609	100 1/6W 5 TA52
R56	0RD1000F609	100 1/6W 5 TA52

For Capacitor & Resistors, the charactors at 2nd and 3rd digit in the P/No. means as follows;	CC, CX, CK, CN : Ceramic CQ : Polyestor CE : Electrolytic	RD : Carbon Film RS : Metal Oxide Film RN : Metal Film RF : Fusible

LOCA. NO	PART NO	DESCRIPTION
R58	0RD1000F609	100 1/6W 5 TA52
R60	0RD1000F609	100 1/6W 5 TA52
R62	0RD1000F609	100 1/6W 5 TA52
R64	0RD1000F609	100 1/6W 5 TA52
R68	0RD1001F609	1.0K 1/6W 5 TA52
R69	0RD6802F609	68K 1/6W 5 TA52
R70	0RD1800F609	180 1/6W 5 TA52
R71	0RD1001F609	1.0K 1/6W 5 TA52
R73	0RD1000F609	100 1/6W 5 TA52
R76	0RD1000F609	100 1/6W 5 TA52
R83	0RD1002F609	10K 1/6W 5 TA52
R86	0RD1001F609	1.0K 1/6W 5 TA52
R101	0RD1000F609	100 1/6W 5 TA52
R102	0RD1000F609	100 1/6W 5 TA52
R104	0RD1002F609	10K 1/6W 5 TA52
R106	0RD1001H609	1K OHM 1/2 W 5% TA52
R111	0RD3601F609	3.6K 1/6W 5 TA52
R113	0RD1002F609	10K 1/6W 5 TA52
R115	0RD1002F609	10K 1/6W 5 TA52
R117	0RD1001F609	1K 1/6W 5 TA52
R125	0RD1001F609	1.0K 1/6W 5 TA52
R127	0RD1001F609	1.0K 1/6W 5 TA52
R128	0RD0102F609	10 1/6W 5 TA52
R132	0RD1001F609	1.0K 1/6W 5 TA52
R137	0RD4701F609	4.7K 1/6W 5 TA52
R138	0RD4701F609	4.7K 1/6W 5 TA52
R139	0RD4702F609	47K 1/6W 5 TA52
R214	0RD1001F609	1.0K 1/6W 5 TA52
R215	0RD1001F609	1.0K 1/6W 5 TA52
R216	0RD1500F609	150 1/6W 5 TA52
R216	0RD2200F609	220 1/6W 5 TA52 *CE-
R216	0RD1800F609	180 1/6W 5 TA52
R217	0RD1001F609	1.0K 1/6W 5 TA52
R218	0RD1001F609	1.0K 1/6W 5 TA52
R219	0RD1001F609	1.0K 1/6W 5 TA52
R221	0RD1001F609	1.0K 1/6W 5 TA52
R229	0RD0752F609	75 1/6W 5% TA
R237	0RD5101F609	5.1K 1/6W 5 TA52
R238	0RD5101F609	5.1K 1/6W 5 TA52
R239	0RD0752F609	75 1/6W 5% TA
R241	0RD4700F609	470 1/6W 5 TA52
R260	0RD1000F609	100 1/6W 5 TA52
R261	0RD1000F609	100 1/6W 5 TA52
R262	0RD1000F609	100 1/6W 5 TA52
R264	0RD2200F609	220 1/6W 5 TA52
R265	0RD0752F609	75 1/6W 5% TA
R270	0RD2200F609	220 1/6W 5 TA52
R270	0RD2200F609	220 1/6W 5 TA52
R271	0RD1000F609	100 1/6W 5 TA52
R271	0RD1000F609	100 1/6W 5 TA52
R273	0RD4701F609	4.70K 1/6W 5% TA52
R300	0RD1000F609	100 1/6W 5 TA52
R301	0RD1000F609	100 1/6W 5 TA52
R302	0RN2001F409	2K 1/6W 1% TA52

LOCA. NO	PART NO	DESCRIPTION
R303	0RN2001F409	2K 1/6W 1% TA52
R304	0RD1000F609	100 1/6W 5 TA52
R305	0RD0331F609	3.3 1/6W 5 TA52
R307	0RS6800H609	680 1/2W 5 TA52
R308	0RS6800H609	680 1/2W 5 TA52
R309	0RD4702F609	47K 1/6W 5 TA52
R310	0RD4701F609	4.70K 1/6W 5% TA52
R311	0RD2000F609	200 1/6W 5 TA52
R314	0RD2202F609	22K 1/6W 5 TA52
R315	0RN0221H609	2.2 1/2W 5 TA52
R316	0RN0221H609	2.2 1/2W 5 TA52
R330	0RD1000F609	100 1/6W 5 TA52
R331	0RN2702F409	27K 1/6W 1% TA52
R332	0RN1001F409	1K 1/6W 1% TA52
R333	0RD2702F609	27K 1/6W 5 TA52
R334	0RN2701F409	2.70K 1/6W 1% TA52
R335	0RN2001F409	2K 1/6W 1% TA52
R336	0RD1501F609	1.5K 1/6W 5 TA52
R337	0RD4700F609	470 1/6W 5 TA52
R338	0RD3301F609	3.3K 1/6W 5 TA52
R339	0RS0561H609	5.6 1/2W 5 TA52
R340	0RS2701H609	2.7K 1/2W 5 TA52
R341	0RS1501H609	1.5K 1/2W 5 TA52
R342	0RS1501H609	1.5K 1/2W 5 TA52
R350	0RD1003F609	100K 1/6W 5 TA52
R351	0RD1002F609	10K 1/6W 5 TA52
R352	0RD3000F609	300 1/6W 5 TA52
R353	0RD1303F609	130K 1/6W 5 TA52
R354	0RD5601F609	5.6K 1/6W 5 TA52
R355	0RD3301F609	3.3K 1/6W 5 TA52
R356	0RS1801H609	1.8K 1/2W 5 TA52
R357	0RD4701F609	4.70K 1/6W 5% TA52
R358	0RS1002H609	10K 1/2W 5 TA52
R359	0RD3002F609	30K 1/6W 5 TA52
R360	0RD8201F609	8.2K 1/6W 5 TA52
R361	0RD1500F609	150 1/6W 5 TA52
R362	0RD1001F609	1.0K 1/6W 5 TA52
R363	0RD5600F609	560 1/6W 5 TA52
R400	0RD1000F609	100 1/6W 5 TA52
R401	0RD1001F609	1.0K 1/6W 5 TA52
R402	0RD2401H609	2.4K 1/2W 5 TA52
R403	0RD0332H609	33 1/2W 5 TA52
R404	0RD7501H609	7.5K 1/2W 5 TA52
R405	0RS1801H609	1.8K 1/2W 5 TA52
R406	0RS0561K607	5.60 2W 5% TA62
R407	0RS1500H609	150 1/2W 5 TA52
R408	0RS4701H609	4.7K 1/2W 5 TA52
R409	0RS2202H609	22K 1/2W 5 TA52
R410	0RS2702H609	27K 1/2W 5 TA52
R411	0RS1001H609	1.0K 1/2W 5 TA52
R412	0RS1300H609	130 1/2W 5 TA52
R414	0RD3303F609	330K 1/6W 5 TA52
R415	180-B01M	RS RECT S 5W 7.5K J
R416	0RS5600K607	560 2W 5% TA62

For Capacitor & Resistors, the charactors at 2nd and 3rd digit in the P/No. means as follows;

CC, CX, CK, CN : Ceramic
CQ : Polyestor
CE : Electrolytic

RD : Carbon Film
RS : Metal Oxide Film
RN : Metal Film
RF : Fusible

The components identified by mark ⚠ are critical for safety.
Replace only with part number specified.

LOCA. NO	PART NO	DESCRIPTION
R417	0RD1203H609	120K 1/2W 5 TA52
R418	0RD3001F609	3.0K 1/6W 5 TA52
R450	0RS4700K607	470 2W 5% TA62
R451	0RS2202K607	22K 2W 5% TA62
R452	0RS2002K607	20K 2W 5% TA62
R453	0RS2202K607	22K 2W 5% TA62
R454	0RS2202K607	22K 2W 5% TA62
R455	0RS2202K607	22K 2W 5% TA62
R456	0RS0221H609	2.2 1/2W 5 TA52
R457	0RS2702K607	27K 2W 5% TA62
R458	180-C02M	5.6KOHM 1/2 W 10%
R459	0RS2702K607	27K 2W 5% TA62
R501	0RD2003F609	200K 1/6W 5 TA52
R502	0RD1000F609	100 1/6W 5 TA52
R503	0RD1000F609	100 1/6W 5 TA52
R508	0RD1003F609	100K 1/6W 5 TA52
R509	0RD3901F609	3.9K 1/6W 5 TA52
R510	0RD2200F609	220 1/6W 5 TA52
R511	0RD2200F609	220 1/6W 5 TA52
R512	0RD2200F609	220 1/6W 5 TA52
R516	0RD1000F609	100 1/6W 5 TA52
R518	0RD3001F609	3.0K 1/6W 5 TA52
R519	0RD1200F609	120 1/6W 5 TA52
R521	0RD1003F609	100K 1/6W 5 TA52
R523	0RD2702F609	27K 1/6W 5 TA52
R524	0RN3902F409	39K 1/6W 1% TA52
R525	0RD1200F609	120 1/6W 5 TA52
R526	0RD1502F609	15K 1/6W 5 TA52
R528	0RD4700F609	470 1/6W 5 TA52
R528	0RD4700F609	470 1/6W 5 TA52
R541	0RD1500F609	150 1/6W 5 TA52
R550	0RD3001F609	3.0K 1/6W 5 TA52
R575	0RD1001F609	1.0K 1/6W 5 TA52
R576	0RD1001F609	1.0K 1/6W 5 TA52
R579	0RD1001F609	1.0K 1/6W 5 TA52
R601	0RD0102F609	10 1/6W 5 TA52
R602	0RD1000F609	100 1/6W 5 TA52
R613	0RD1001F609	1.0K 1/6W 5 TA52
R633	0RD1002F609	10K 1/6W 5 TA52
R634	0RD0472F609	47 1/6W 5% TA
R638	0RD1001F609	1.0K 1/6W 5 TA52
R659	0RD1002F609	10K 1/6W 5 TA52
R674	0RD0272H609	27 1/2W 5 TA52
R694	0RD0272H609	27 1/2W 5 TA52
R695	0RD0331F609	3.3 1/6W 5 TA52
R705	0RD1800F609	180 1/6W 5 TA52
R801	180-822M	RWR 15W 1.0 OHM J PD
R801	180-822G	10W 2.2OHM J *CL-,CE-
R802	0RS2202K607	22K 2W 5% TA62
R803	0RS2202K607	22K 2W 5% TA62
R804	0RD5600F609	560 1/6W 5 TA52
R805	0RD4300F609	430 1/6W 5 TA52
R806	180-A01D	RW ROUND G 2W 0.16 J
R807	0RS1000H609	100 1/2W 5 TA52

LOCA. NO	PART NO	DESCRIPTION
R808	0RS0152K607	15 2W 5% TA62
R809	0RS0222K607	22 2W 5% TA62
R810	0RN0680H609	0.68 1/2W 5 TA52
R811	0RN0680H609	0.68 1/2W 5 TA52
R812	0RS6801H609	6.8K 1/2W 5 TA52
R813	0RD2001F609	2.0K 1/6W 5 TA52
R814	0RD1001F609	1.0K 1/6W 5 TA52
R815	0RD3302F609	33K 1/6W 5% TA52
R816	0RD1001F609	1.0K 1/6W 5 TA52
R817	0RS1002H609	10K 1/2W 5 TA52
R818	180-C02L	0.47MOHM 1/2 W 10%
⚠ R820	180-C02H	RC 1/2W 8.2M K TA)
R850	0RD2001F609	2.0K 1/6W 5 TA52
R851	0RD6801F609	6.8K 1/6W 5 TA52
R852	0RS0472K607	47 2W 5% TA62
R853	0RS1501H609	1.5K 1/2W 5 TA52
R854	0RS1002K607	10K 2W 5% TA62
R855	0RD1002F609	10K 1/6W 5 TA52
R856	0RD4701F609	4.70K 1/6W 5% TA52
R857	0RD4700H609	470 1/2W 5% TA52
R858	0RS1300H609	130 1/2W 5 TA52
R859	0RD1003H609	100K 1/2W 5 TA52
R860	0RD4701F609	4.70K 1/6W 5% TA52
R862	0RS0182H609	18 1/2W 5 TA52
R862	0RS0512H609	51 1/2W 5 TA52 *CL-
R863	0RD4701F609	4.70K 1/6W 5% TA52
R864	0RD4702F609	47K 1/6W 5 TA52
R880	0RS0392H609	39 1/2W 5
R881	0RD4701F609	4.70K 1/6W 5% TA52
R882	0RD4702F609	47K 1/6W 5 TA52
R901	0RD1001F609	1.0K 1/6W 5 TA52
R903	0RD2201F609	2.2K 1/6W 5 TA52
R919	0RD1000F609	100 1/6W 5 TA52
R921	0RD1000F609	100 1/6W 5 TA52
R922	0RD1001F609	1.0K 1/6W 5 TA52
R923	0RD1000F609	100 1/6W 5 TA52
R925	0RD1000F609	100 1/6W 5 TA52
R926	0RD1000F609	100 1/6W 5 TA52
R927	0RD1501H609	1.5K 1/2W 5 TA52
R928	0RD1501H609	1.5K 1/2W 5 TA52
R929	0RD1501H609	1.5K 1/2W 5 TA52
R931	0RD2204H609	2.2M 1/2W 5 TA52
R936	0RS6801H609	6.8K 1/2W 5 TA52
R939	0RS6801H609	6.8K 1/2W 5 TA52
R940	0RS4701H609	4.7K 1/2W 5 TA52
R941	0RS4701H609	4.7K 1/2W 5 TA52
R942	0RS1500H609	150 1/2W 5 TA52
R943	0RD0331H609	3.3 1/2W 5 TA52
R944	0RS1500H609	150 1/2W 5 TA52
R945	0RD0331H609	3.3 1/2W 5 TA52
R947	0RD6802F609	68K 1/6W 5 TA52
R948	0RD1000F609	100 1/6W 5 TA52
R951	0RD3901F609	3.9K 1/6W 5 TA52
R952	0RD0222F609	22 1/6W 5 TA52

The components identified by mark ⚠ are critical for safety.
Replace only with part number specified.

For Capacitor & Resistors, the charactors at 2nd and 3rd digit in the P/No. means as follows;

CC, CX, CK, CN : Ceramic
CQ : Polyestor
CE : Electrolytic

RD : Carbon Film
RS : Metal Oxide Film
RN : Metal Film
RF : Fusible

LOCA. NO	PART NO	DESCRIPTION
R955	0RD1201F609	1.2K 1/6W 5 TA52
R956	0RD1000F609	100 1/6W 5 TA52
R957	0RD1000F609	100 1/6W 5 TA52
R959	0RD2201F609	2.2K 1/6W 5 TA52
R960	0RD4300H609	430 1/2W 5 TA52
R964	0RD1001F609	1.0K 1/6W 5 TA52
R965	0RD1202F609	12K 1/6W 5 TA52
R966	0RD2701F609	2.7K 1/6W 5 TA52
R968	0RD6802F609	68K 1/6W 5 TA52
R970	0RD3300F609	330 1/6W 5 TA52
R971	0RD1800F609	180 1/6W 5 TA52
R972	0RD3300F609	330 1/6W 5 TA52
R972	0RD6200H609	620 1/2W 5 TA52
R979	0RD2200F609	220 1/6W 5 TA52
R980	0RD1000F609	100 1/6W 5 TA52
R981	0RD2200F609	220 1/6W 5 TA52
R982	0RD0822F609	82 1/6W 5% TA
R983	0RD0822F609	82 1/6W 5% TA
R990	0RD2701F609	2.7K 1/6W 5 TA52
R996	0RD6800H609	680 1/2W 5 TA52
R997	0RD6800H609	680 1/2W 5 TA52
R1101	0RD3300F609	330 1/6W 5 TA52
R1102	0RD4701F609	4.70K 1/6W 5% TA52
R1103	0RD1301F609	1.3K 1/6W 5 TA52
R1204	0RD2403F609	240K 1/6W 5 TA52
R1206	0RD0752F609	75 1/6W 5% TA
R1208	0RD2403F609	240K 1/6W 5 TA52
R1212	0RD0752F609	75 1/6W 5% TA
R1292	0RD0752F609	75 1/6W 5% TA
RD4	0RD4701F609	4.70K 1/6W 5% TA52
RD19	0RD2201F609	2.2K 1/6W 5 TA52
RD22	0RD4701F609	4.70K 1/6W 5% TA52
VR101	180-F03H	EVN-DJAY03 B103
VR102	180-F03H	EVN-DJAY03 B103
SPARK GAP		
SG901	165-004A	SPARK GAP,AG20PT 152F-L3N/S-23
SG902	165-004A	SPARK GAP,AG20PT 152F-L3N/S-23
SG903	165-004A	SPARK GAP,AG20PT 152F-L3N/S-23
SG904	165-004A	SPARK GAP,AG20PT 152F-L3N/S-23
JACK		
JA01	6613V00004A	JACK ASSY PJ6054A EARPHONE+S-VHS+3P
SK101	6612VMH001A	JACK,SCART UPJ-R1-018 RGB 21 PI
"	6612VJH011C	JACK,RCA PPJ109C A/V IN/OUT 6
SK102	6612VJH011C	JACK,RCA PPJ109C A/V IN/OUT 6
SK102	6612VMH001A	JACK,SCART UPJ-R1-018
SWITCH		
SW1	140-315C	SWITCH,TACT
SW2	140-315C	SWITCH,TACT
SW3	140-315C	SWITCH,TACT
SW4	140-315C	SWITCH,TACT
SW5	140-315C	SWITCH,TACT

LOCA. NO	PART NO	DESCRIPTION
SW6	140-315C	SWITCH,TACT
⚠ SW801	6600VM2001A	SWITCH,PUSH POWER SDDFC3
FILTER & CRYSTAL		
LD02	150-B02Q	FILTER(CIRC),LC LPF 2EA 0.1MHZ
T801	150-F06T	FILTER(CIRC),LINE SQE3535 SMPC 20MH
T802	150-F06T	FILTER(CIRC),LINE SQE3535 SMPC 20MH
X01	156-A01P	CRYSTAL,STANDARD HC49U 8.000MHZ 30
X501	156-A01V	CRYSTAL,STANDARD HC49U 4.433619MHZ 3
X502	156-A01C	CRYSTAL,STANDARD HC49U 3.579545MHZ 3
X601	156-A02M	CRYSTAL,STANDARD HC49U 18.432MHZ 30P
X701	156-A02U	CRYSTAL,STANDARD HC49U 27.000MHZ 30P
Z101	166-A01B	FILTER,OFWK3953M 37.4MHZ(PIF
Z102	6200VQS001F	FILTER(CIRC),SAW OFWM3960M 38.9MHZ(INT
Z102	166-A01B	FILTER,0FWK3953M *CL-
Z103	6200VQS001G	FILTER(CIRC),SAW 0FWK9350M 38.9MHZ
Z104	6200VQS001H	FILTER(CIRC),SAW OFWK9461M 33.9MHZ(SIF
Z106	166-C06D	FILTER(CIRC),TRAP MKT40.4MA110P-TF01
Z109	166-F01H	FILTER(CIRC),EMI DS306-93Y5S 101M 50V
Z111	166-F01H	FILTER(CIRC),EMI DS306-93Y5S 101M 50V
Z113	166-F01D	FILTER,DSS306-93Y5S271M *CL-
Z210	166-C04C	FILTER(CIRC),TRAP TPWA02B-TF21 5.5/6.0MHZ
Z601	166-F01D	FILTER,DSS306-93Y5S271M MURATA 50VOLT
ACCESSORIES		
A1	3828VA0180C	MANUAL,OWNERS MC991A.LG AR 9MTX
A1	3828VA0180G	MANUAL,OWNERS MC991A.LG EN 9MTX
A1	3828VA0180J	MANUAL,OWNERS MC991A.LG RU 9MTX
A1	3828VA0191A	MANUAL,OWNERS MC991A.DG,LG ,CE/EN
A1	3828VA0191J	MANUAL,OWNERS MC991A.FS,LG,FR
A1	3828VA0191M	MANUAL,OWNERS MC991A.PL,LG,PL/EN
A2	6710V00009M	REMOTE CONTROLLER(W/TXT,EYE,STEREO)
A2	6710V00009S	REMOTE CONTROLLER(W/O TXT,W/EYE,STEREO)
A3	450-018C	ADAPTER,ANT(300 TO 75)
MISCELLANEOUS		
	6212VBK001A	RESONATOR,JT B455ET4 CHEQUERS 455HZ
⚠ P901	6620VBD001A	SOCKET (CIRC),CPT PCS701A 9P
⚠ RL801	141-018F	RELAY,DG5D1-0-2 DAIICHI 5V 106MA 250
RL802	141-018F	RELAY,DG5D1-0-2 DAIICHI 5V 106MA 250
⚠ T402	6174Z-6005D	FBT FTMPC31-6005D
TH801	163-054F	THERMISTOR,PTC J502P84D140M290Q
TU01	6700VPF005B	TUNER,TU8PSD01DA LGEC PAL DIN D/K 38
TU01	6700VPF005A	TUNER,TU8PSD01DB
ZN1101	164-003D	VARISTOR,SVC 561D-14A

EXPLODED VIEW

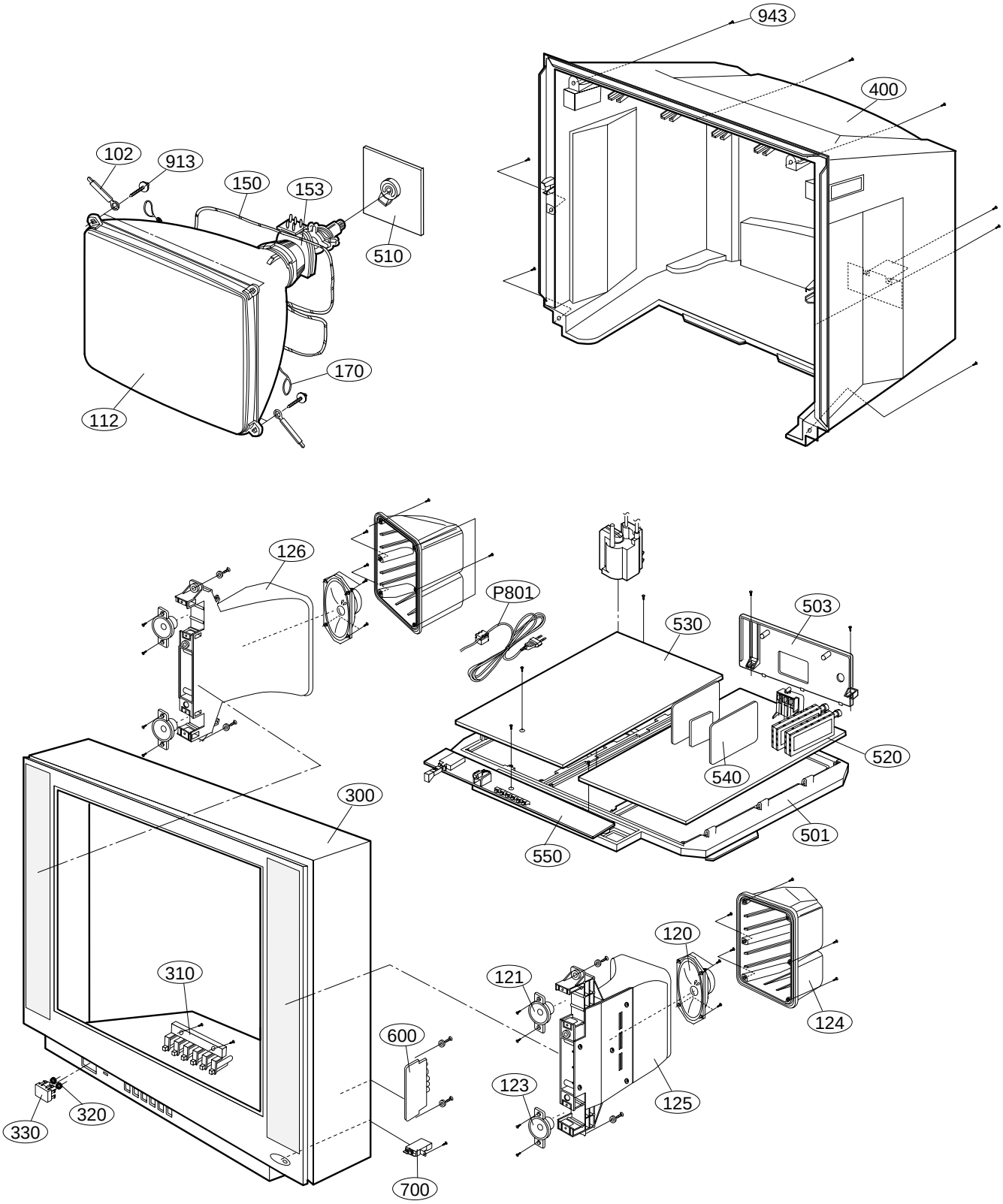

EXPLODED VIEW PARTS LIST

The components identified by mark ⚠ is critical for safety.
Replace only with part number specified.

LOCA. NO	PART NO	DESCRIPTIONS
102	341-919C	HOLDER,D-COIL
⚠ 112	6341V29006A	BARE CPT ASSY
	6341V29004A	BARE CPT ASSY
120	6400VA0015A	SPEAKER,GENERAL C151PX-373K14 8 OHM 15W
121	120-C76G	SPEAKER,TWEETER C050TX-357K14 8 OHM 10/
123	6400VA0016A	SPEAKER,GENERAL C050TX-346K14 8 OHM 15W
124	3550V00039A	COVER,SPEAKER
125	4810V00129A	BRACKET(R),SPEAKER
126	4810V00129B	BRACKET(L),SPEAKER
⚠ 150	150-201S	COIL,DEGAUSSING CU 29” 440TURN 102 OHM 3P
⚠ 153	6150Z-1240F	DY,DC29SLFL1
⚠ 170	170-844K	CPT EARTH
300	3091V00173B	CABINET ASSY *CT-29Q10ET
	3091V00173L	CABINET ASSY *CL-29Q10ET
	3091V00173Q	CABINET ASSY *CE-29Q10ET
310	5020V00316A	BUTTON,CONTROL
320	320-070G	SPRING,COIL
330	5020V00315A	BUTTON,POWER
400	3809V00127B	BACK COVER ASSY
	3809V00127J	BACK COVER ASSY(2 SCART)
501	4810V00139B	BRACKET,MAIN
503	3500V00018A	BOARD,A/V(1PHONE & 1SCART)
	3500V00017A	BOARD,A/V(2SCART)
510	6871VSM327A	PWB ASSY,CPT
520	6871VMM282B	PWB ASSY MAIN *LGEMT,LGEIN
	6871VMM282C	PWB ASSY MAIN *LGEAK,NAGHI,E.A.C
	6871VMM282D	PWB ASSY MAIN *LGEIL
	6871VMM282F	PWB ASSY MAIN *LGESA,LGEAL,N.ALLIED,H.POINT
	6871VMM282G	PWB ASSY MAIN *TELESTAR,LGEGF,KOOHEJI,I.G.I
	6871VMM282K	PWB ASSY MAIN *LGESV
	6871VMM333A	PWB ASSY MAIN CE,PAL/SECAM *LGEDG,LGEIS,LGEES,AGON
	6871VMM333B	PWB ASSY MAIN CE,PAL/SECAM *LGEPL
	6871VMM335A	PWB ASSY MAIN SECAML/L’ *LGEFS
530	6871VDM068B	PWB ASSY MAIN2 NON EU(WIDE ST-B
	6871VDM082A	PWB ASSY MAIN2 CE,PAL/SECAM
	6871VDM083A	PWB ASSY MAIN2 SECAM(L/L’)
540	6871VSM326A	PWB ASSY,DCF
550	6871VSM345A	PWB ASSY,CONTROL
600	6871VSM328A	PWB ASSY,AV
	6871VSM328B	PWB ASSY,AV EU
700	0IGL120104D	CDS SENSOR MODULE
913	332-229H	SCREW ASSY,HEXAGON HEAD
943	1PTF0403116	SCREW,TRUSS HEAD D4.0 L16.0
⚠ P801	174-009V	CORD,POWER(W/HOLD,HOUSING)
	174-224A	CORD,POWER FOR UK