GRUNDIG

SCHALTBILD
CIRCUIT DIAGRAM
SCHEMA

TV

Ⓓ Btx * 32700 #

Schaltbild
Circuit Diagram
Schema

Sach-Nr./Part No. 72010-920.30

Zusätzlich erforderliche Unterlagen:

Additionally required Service Manuals:

Documentazioni aggiuntive necessarie:

Service Manual

Sicherheit
Safety

Sach-Nr./Part No. 72010-800.00

CUC 6361

(9.21467-01 / G.CC 9669)

RTV servis Horvat

Kešinci, 31402 Semeljci

Tel : 031-856-637

Tel / fax : 031-856-139

Mob : 098-788-319

rtv-servis-horvat@os.tel.hr

Es gelten die Vorschriften und Sicherheitshinweise gemäß dem Service Manual "Sicherheit", Sach-Nummer 72010-800.00, sowie zusätzlich eventuell abweichende, landesspezifische Vorschriften!

The regulations and safety instructions shall be valid as provided by the "Safety" Service Manual, part number 72010-800.00, as well as the respective national deviations.

Valgono le prescrizioni e note di sicurezza secondo il Manuale di Servizio "Norme di sicurezza" numero d'ordine 72010-800.00, cosi pure le eventuali disposizioni specifiche vigenti nel singolo stato.

Weitere chassisbezogene Informationen entnehmen Sie bitte dem zugehörigen Service Manual.

For more detailed information on the chassis, please see the appropriate Service Manual.

Ulteriori informazioni a seconda della chassis Le rilevi per favore dal relativo Manuale di Servizio.

Inhaltsverzeichnis

Seite

Abgleich 2

Schaltpläne 5-22

TP 720 29642-059.06 5
Oszillogramme Chassis 6
Gesamtschaltplan 7-10
ZF-Verstärker 29504-102.56 11
Farb-Dec. Sync. 29504-105.67 12-14
Tuner 29504-201.21 15-16
Bedieneinheit 29501-080.67 17
Bildrohrplatte 29305-122.01 18
Abstimmbaustein 29504-003.81 19-20
Abstimmbaustein 29504-103.87 21-22

Table of Contents

Page

Alignment 3

Circuit Diagram 5-22

TP 720 29642-059.06 5
Oscillograms Chassis 6
General Circuit Diagram 7-10
IF Amplifier 29504-102.56 11
Colour-Dec. Sync. 29504-105.67 12-14
Tuner 29504-201.21 15-16
Control Unit 29501-080.67 17
CRT Panel 29305-122.01 18
Tuning Module 29504-003.81 19-20
Tuning Module 29504-103.87 21-22

Sommario

Pagina

Taratura 4

Schema 5-22

TP 720 29642-059.06 5
Oscillogrammi Telaio 6
Schema Completo 7-10
Amplificatore FI 29504-102.56 11
Dec. Colore Sincr. 29504-105.67 12-14
Tuner 29504-201.21 15-16
Unita di Comando 29501-080.67 17
Piastra Cinescopio 29305-122.01 18
Mod.Sintonia 29504-003.81 19-20
Mod.Sintonia 29504-103.87 21-22

GB

Alignment

All adjustment controls not mentioned in this description are adjusted during production and must not be re-adjusted in the case of repairs.

Service Adjustments

1. Tuner AGC
After replacement or repair of the IF-amplifier or tuner check the Delayed Automatic Gain Control Voltage and re-adjust if necessary.
2. White balance
After replacement of the picture tube, replacement or repair of the picture tube panel, check the white balance and re-adjust if necessary.
3. Adjustment of the screen grid voltage U_{SG}
After replacement of the picture tube, replacement or repair of the picture tube panel check the screen grid voltage and re-adjust if necessary.
4. Adjustment of the diode modulator stage
Only necessary in the case of inappropriate changes in the horizontal deflection.
5. Geometry alignment
After replacement or repair of the tuning module check the picture geometry via the menu and correct the settings if necessary.

Alignment	Preparations	Alignment Process
1. Tuner-AGC	Feed in a standard test pattern at a channel in the upper range of the UHF Band. The RF should be at least 1.5mV (64dBµV). Call up the "Tuner-AGC" menu via the Service Programme "Info Center"–> "Special Functions" –> "Service" –> "Code Number 8500".	With the ◀ ▶ buttons, tune the TV station that noise just begins to appear in the picture. Then tune in the reverse direction until the picture just becomes noise free. Store with "OK".
2. White balance	Call up the "White Balance" menu via the Service Programme "Info Center" –> "Special Functions" –> "Service" –> "Code Number 8500".	With ◀ ▶ set the **VG** and **VB** values (amplification green and blue) so that the white rectangular area in the middle of the picture becomes achromatic. Store with "OK".
3. Adjustment of the screen grid voltage U_{SG}	Feed in a test pattern. With the remote control adjust the screen brightness so that the grey areas just become dark. Switch the TV receiver to AV operation. Connect a high-ohmic voltmeter (series resistance approx. 220kOhm) to the test points R, G, B and determine the maximum voltage.	With the control U_{SG} on the picture tube panel set the maximum voltage level to approx. **165V**. If retrace lines are visible on the screen reduce the voltage by approx. 10V .
4. Adjustment of the diode modulator stage	The bridge coil L511 is correctly adjusted during production and should not be re-adjusted any more. Call up the "Geometry" menu via the Service Programme –> "Info Center"–> "Special Functions" –> "Service" –> "Code Number 8500". Set the horizontal amplitude to minimum. Connect one test probe of a dual-beam oscilloscope to the collector of the transistor T568. Connect the second test probe between the diodes D502 and D503.	Adjust the coil **L511** so that both oscillograms have the same pulse width. Re-adjust the horizontal amplitude according to the test pattern.
5. Geometry adjustment	Feed in the test pattern. Call up the "Geometry Adjustment" menu via the Service Programme "Info Center"–> "Special Functions" –> "Service" –> "Code Number 8500".	Check the geometry via the menu and correct the data according to the test pattern.

Gesamtschaltplan / General Circuit Diagram / Schema Completo

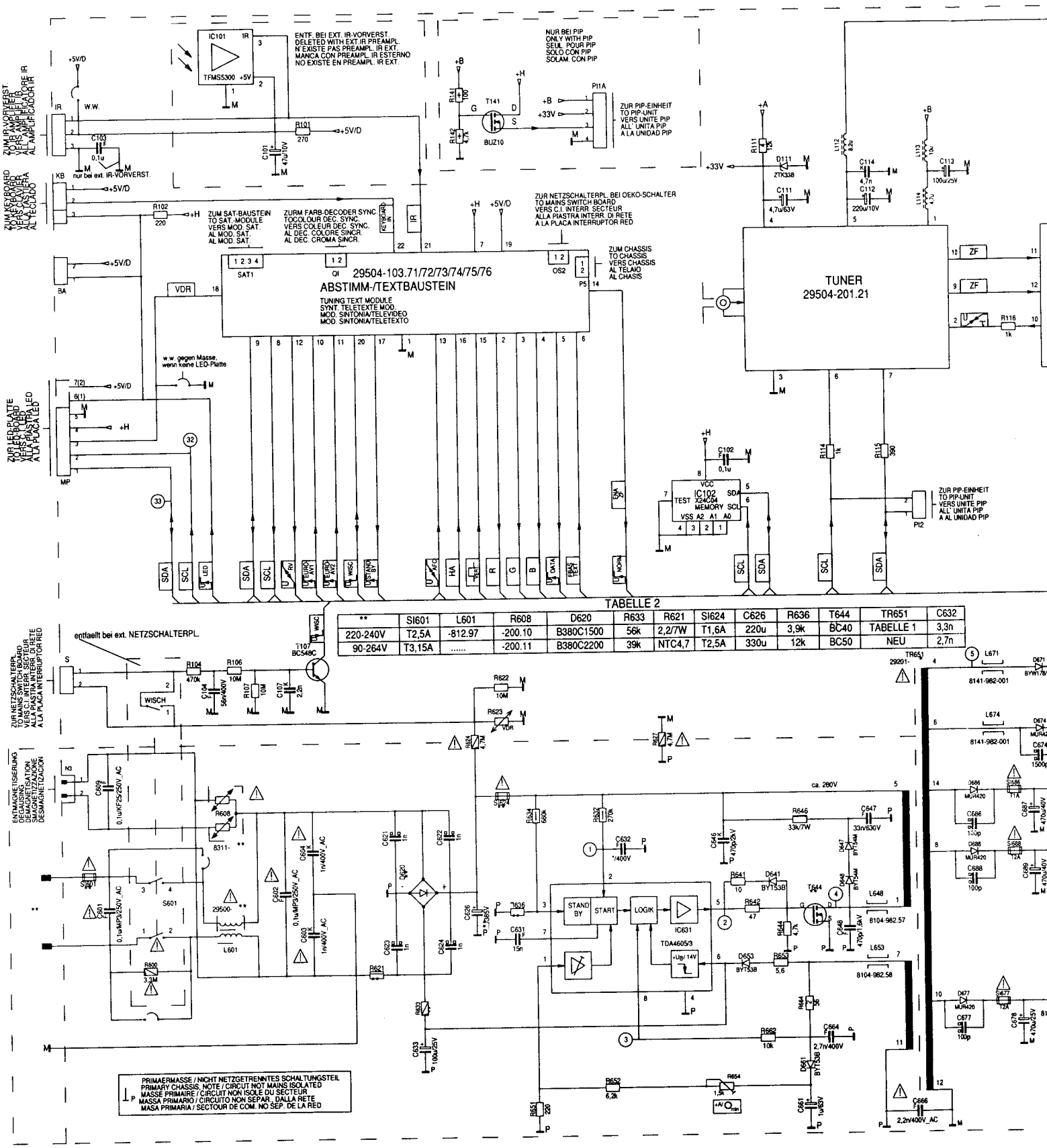

TABELLE 2

**	SI601	L601	R608	D620	R633	R621	SI624	C626	R636	T644	TR651	C632
220-240V	T2,5A	-812.97	-200.10	B380C1500	56k	2,2/7W	T1,6A	220u	3,9k	BC40	TABELLE 1	3,3n
90-264V	T3,15A	.....	-200.11	B380C2200	39k	NTC4,7	T2,5A	330u	12k	BC50	NEU	2,7n

pleto

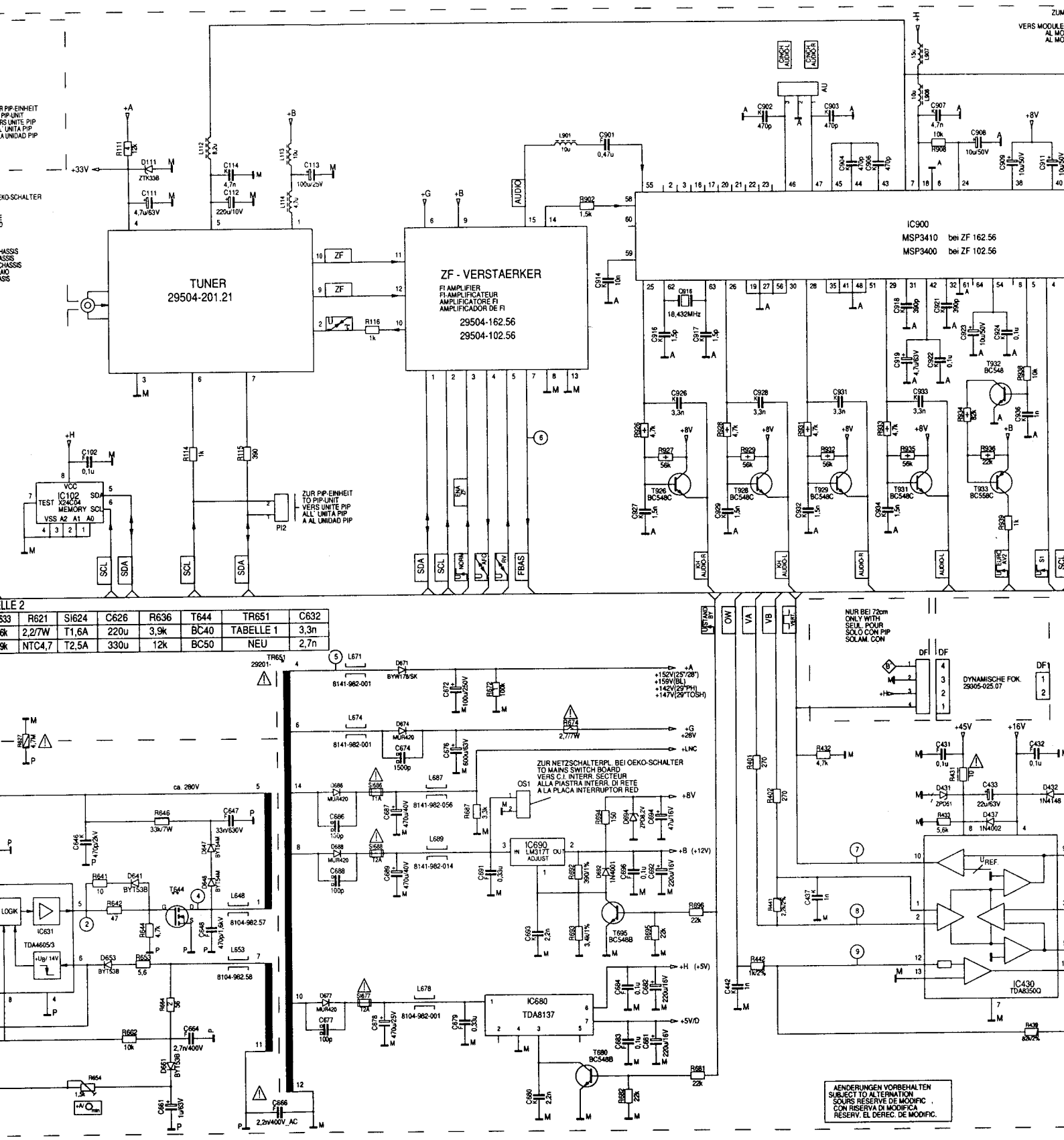

33	R621	SI624	C626	R636	T644	TR651	C632
6k	2,2/7W	T1,6A	220u	3,9k	BC40	TABELLE 1	3,3n
9k	NTC4,7	T2,5A	330u	12k	BC50	NEU	2,7n

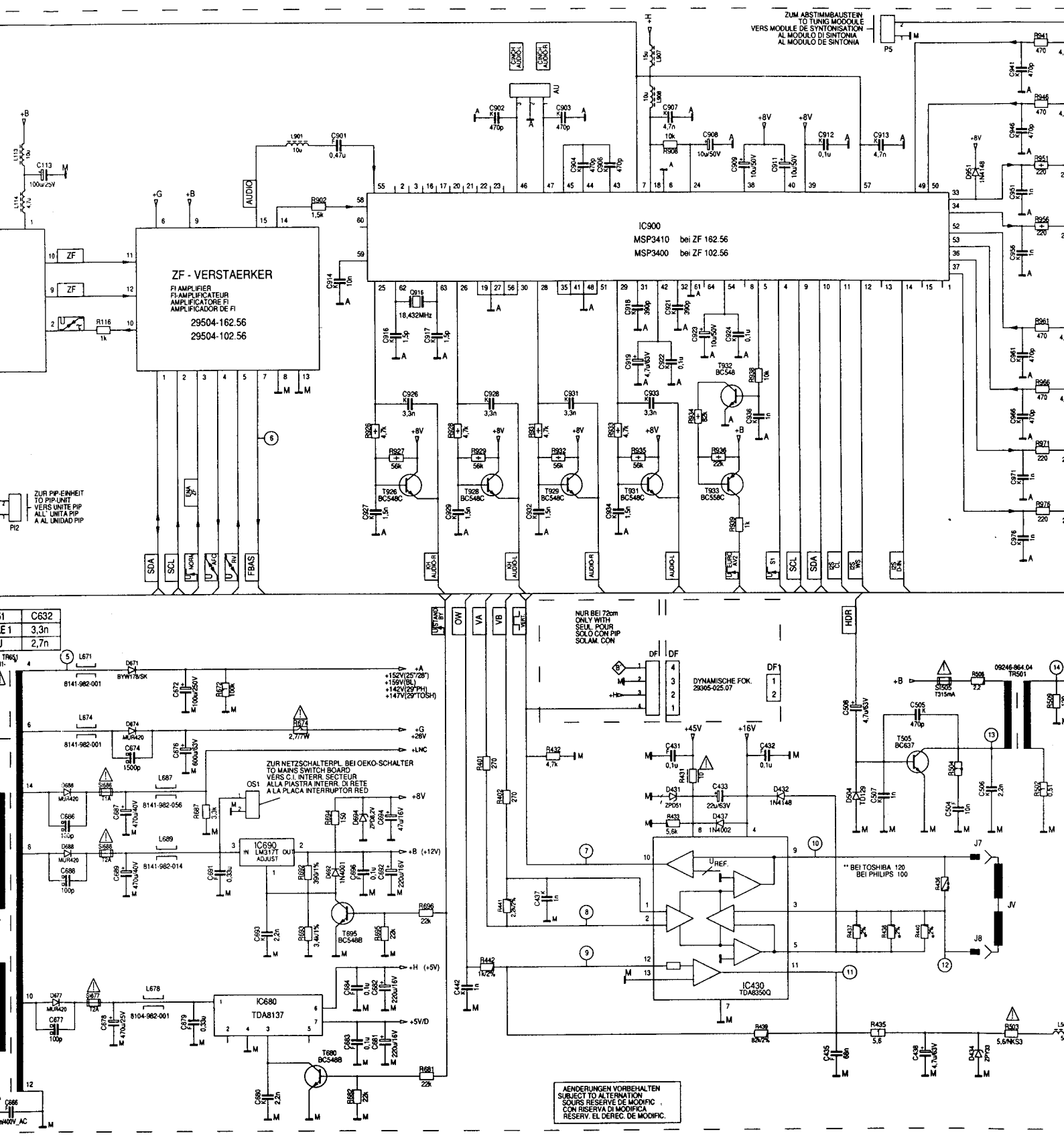
ZF - VERSTAERKER
FI AMPLIFIER
FI-AMPLIFICATEUR
AMPLIFICATORE FI
AMPLIFICADOR DE FI
29504-162.56
29504-102.56
IC900
MSP3410 bei ZF 162.56
MSP3400 bei ZF 102.56
ZUM ABSTIMMBAUSTEIN
TO TUNIG MODOULE
VERS MODULE DE SYNTONISATION
AL MODULO DI SINTONIA
AL MODULO DE SINTONIA
ZUR PIP-EINHEIT
TO PIP-UNIT
VERS UNITE PIP
ALL' UNITA PIP
A AL UNIDAD PIP
ZUR NETZSCHALTERPL. BEI OEKO-SCHALTER
TO MAINS SWITCH BOARD
VERS C.I. INTERR. SECTEUR
ALLA PIASTRA INTERR. DI RETE
A LA PLACA INTERRUPTOR RED
IC690
LM317T
ADJUST
IC680
TDA8137
IC430
TDA8350Q
NUR BEI 72cm
ONLY WITH
SEUL POUR
SOLO CON PIP
SOLAM. CON
DYNAMISCHE FOK.
29305-025.07
** BEI TOSHIBA 120
BEI PHILIPS 100
AENDERUNGEN VORBEHALTEN
SUBJECT TO ALTERNATION
SOURS RESERVE DE MODIFIC
CON RISERVA DI MODIFICA
RESERV. EL DEREC. DE MODIFIC.

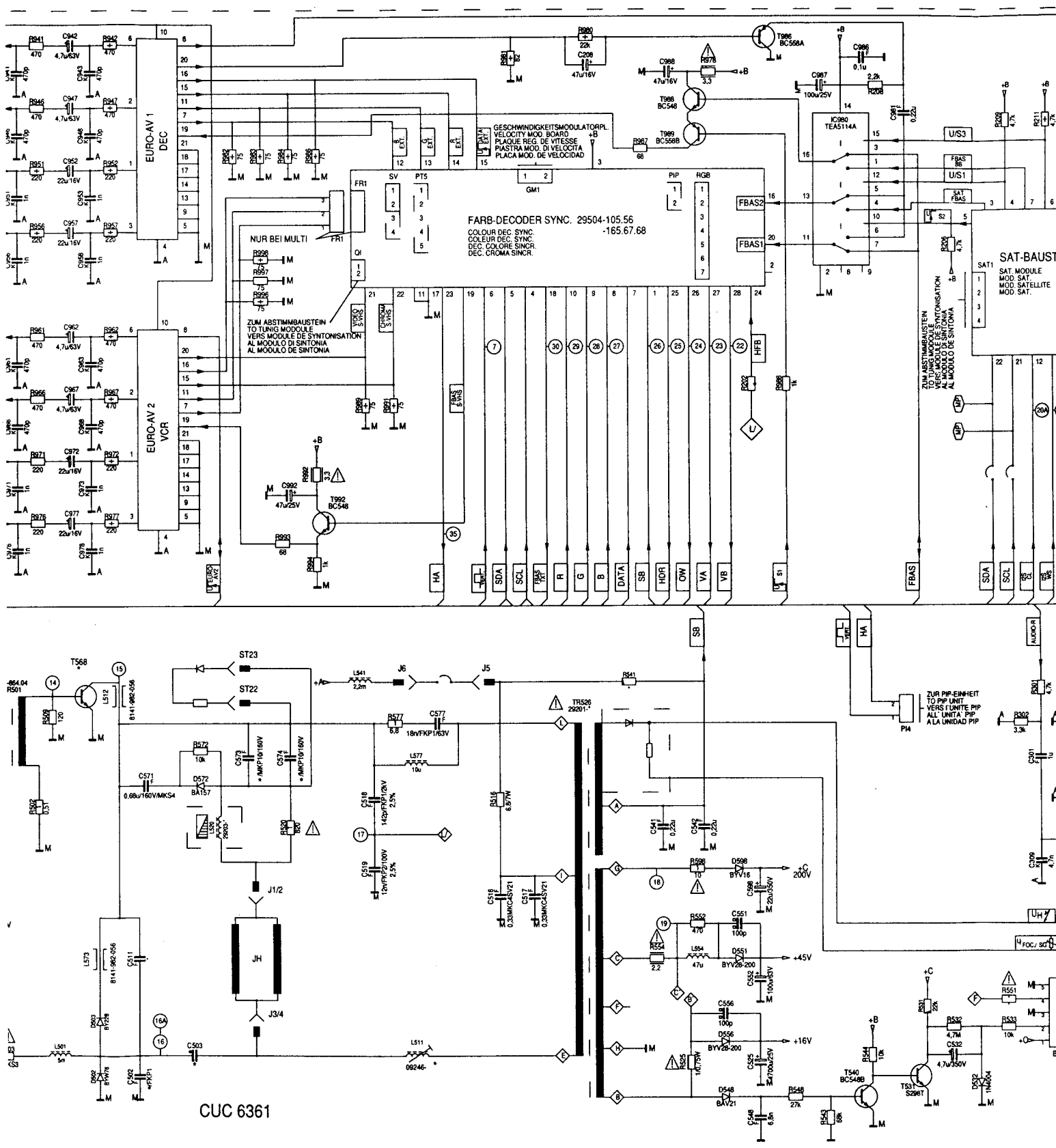
EURO-AV 1 DEC
EURO-AV 2 VCR
GESCHWINDIGKEITSMODULATORPL.
VELOCITY MOD. BOARD
PLAQUE REG. DE VITESSE
PIASTRA MOD. DI VELOCITA
PLACA MOD. DE VELOCIDAD
FARB-DECODER SYNC. 29504-105.56
-165.67.68
COLOUR DEC. SYNC.
COLEUR DEC. SYNC.
DEC. COLORE SINCR.
DEC. CROMA SINCR.
NUR BEI MULTI
ZUM ABSTIMMBAUSTEIN
TO TUNIG MODULE
VERS MODULE DE SYNTONISATION
AL MODULO DI SINTONIA
AL MODULO DE SINTONIA
SAT-BAUST
SAT. MODULE
MOD. SAT.
MOD. SATELLITE
MOD. SAT.
ZUR PIP-EINHEIT
TO PIP UNIT
VERS l'UNITE PIP
AL' UNITA' PIP
A LA UNIDAD PIP
CUC 6361

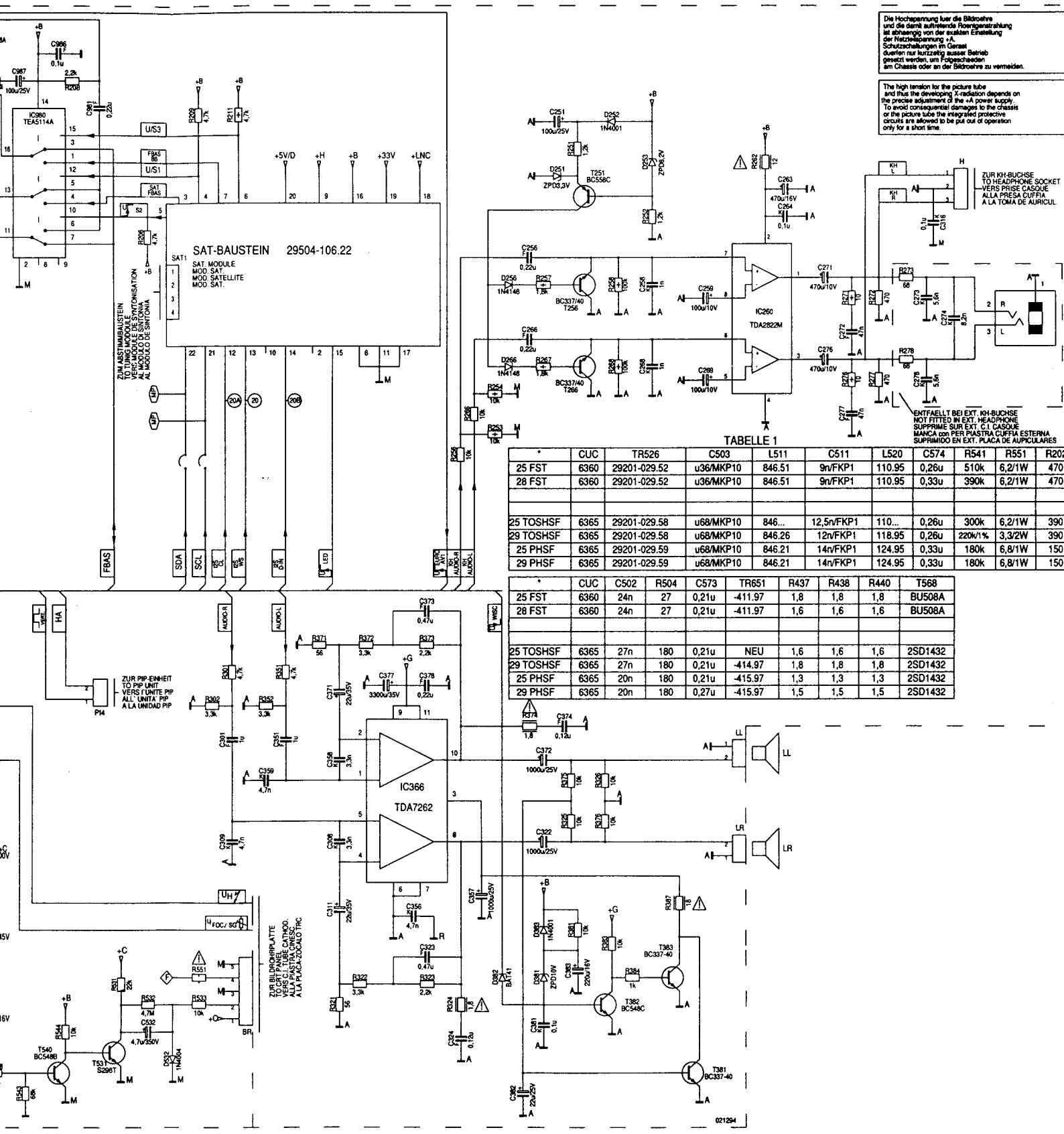

Die Hochspannung fuer die Bildroehre und die damit auftretende Roentgenstrahlung ist abhaengig von der exakten Einstellung der Netzteilspannung +A. Schutzschaltungen im Geraet duerfen nur kurzzeitig ausser Betrieb gesetzt werden, um Folgeschaeden am Chassis oder an der Bildroehre zu vermeiden.

The high tension for the picture tube and thus the developing X-radiation depends on the precise adjustment of the +A power supply. To avoid consequential damages to the chassis or the picture tube the integrated protective circuits are allowed to be put out of operation only for a short time.

TABELLE 1

*	CUC	TR526	C503	L511	C511	L520	C574	R541	R551	R20
25 FST	6360	29201-029.52	u36/MKP10	846.51	9n/FKP1	110.95	0,26u	510k	6,2/1W	470
28 FST	6360	29201-029.52	u36/MKP10	846.51	9n/FKP1	110.95	0,33u	390k	6,2/1W	470
25 TOSHSF	6365	29201-029.58	u68/MKP10	846...	12,5n/FKP1	110...	0,26u	300k	6,2/1W	390
29 TOSHSF	6365	29201-029.58	u68/MKP10	846.26	12n/FKP1	118.95	0,26u	220k/1%	3,3/2W	390
25 PHSF	6365	29201-029.59	u68/MKP10	846.21	14n/FKP1	124.95	0,33u	180k	6,8/1W	150
29 PHSF	6365	29201-029.59	u68/MKP10	846.21	14n/FKP1	124.95	0,33u	180k	6,8/1W	150

*	CUC	C502	R504	C573	TR651	R437	R438	R440	T568
25 FST	6360	24n	27	0,21u	-411.97	1,8	1,8	1,8	BU508A
28 FST	6360	24n	27	0,21u	-411.97	1,6	1,6	1,6	BU508A
25 TOSHSF	6365	27n	180	0,21u	NEU	1,6	1,6	1,6	2SD1432
29 TOSHSF	6365	27n	180	0,21u	-414.97	1,8	1,8	1,8	2SD1432
25 PHSF	6365	20n	180	0,21u	-415.97	1,3	1,3	1,3	2SD1432
29 PHSF	6365	20n	180	0,27u	-415.97	1,5	1,5	1,5	2SD1432

ZF-Verstärker / IF Amplifier / Amplificatore FI

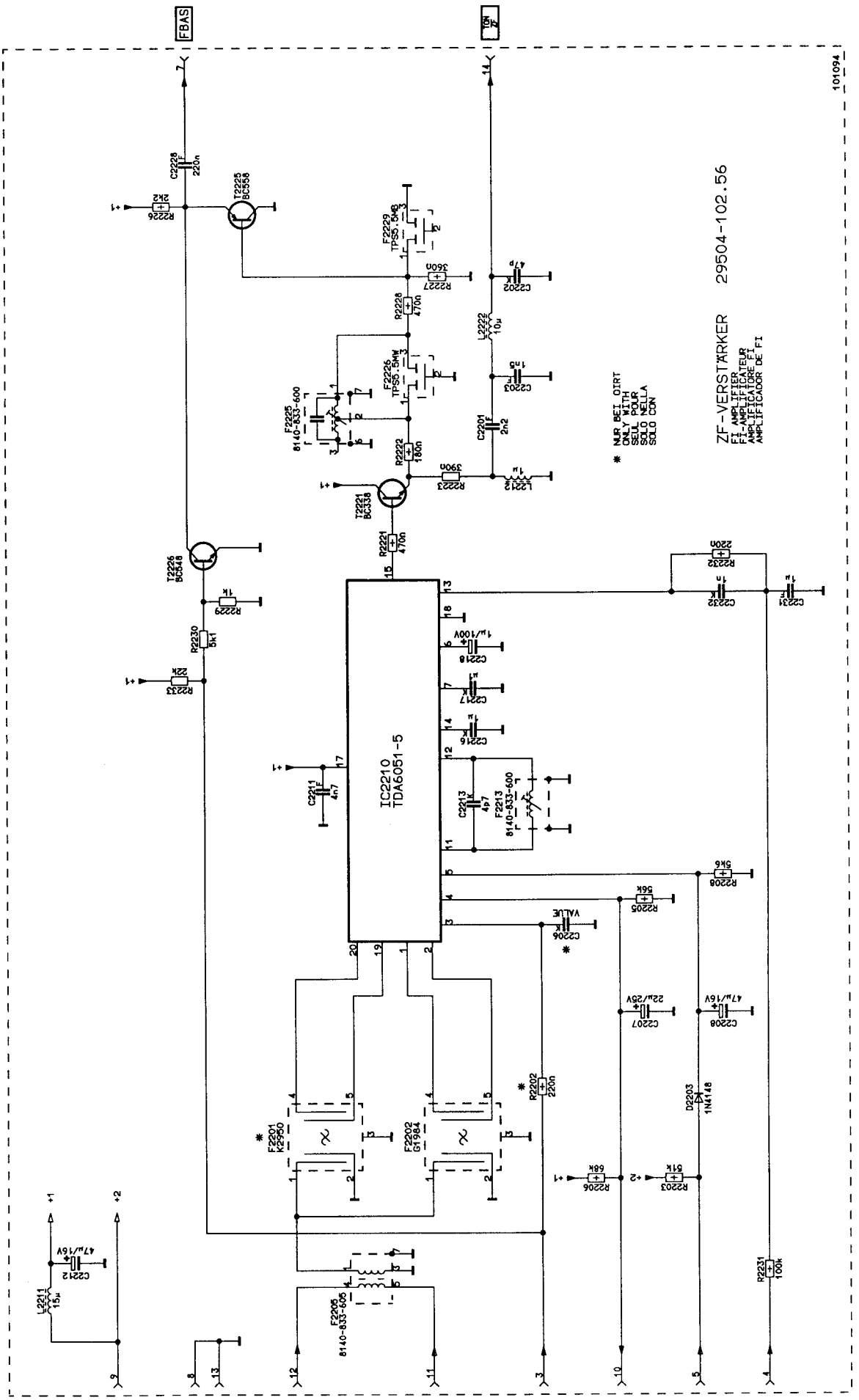

Farb-Dec. Sync. / Colour-Dec. Sync. / Dec. Colore Sincr.

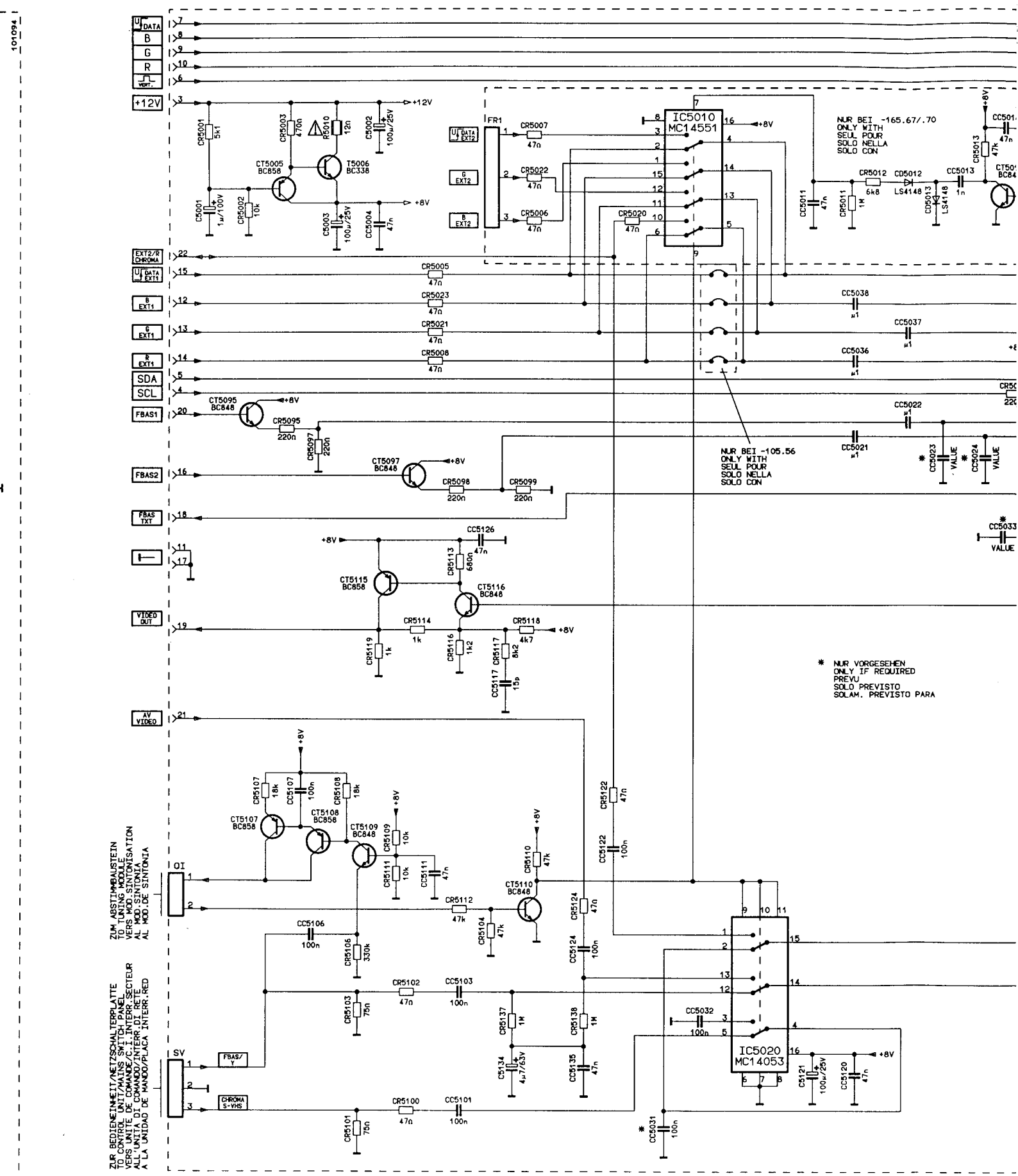

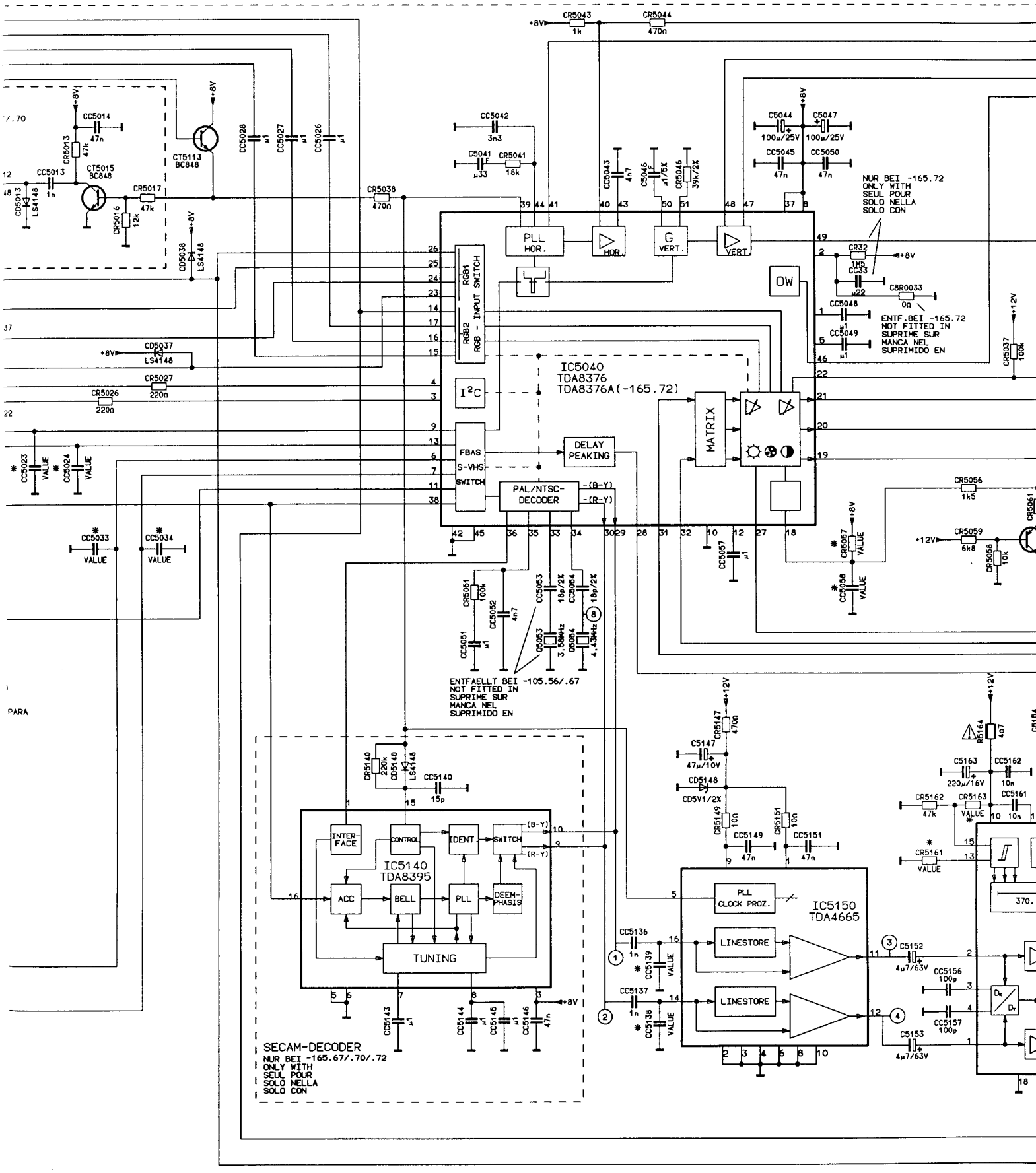
IC5040
TDA8376
TDA8376A(-165.72)
PLL HOR.
HOR.
G VERT.
VERT.
OW
RGB1
RGB2
RGB - INPUT SWITCH
I²C
FBAS
S-VHS
SWITCH
DELAY PEAKING
PAL/NTSC-DECODER
MATRIX
NUR BEI -165.72
ONLY WITH
SEUL POUR
SOLO NELLA
SOLO CON
ENTF.BEI -165.72
NOT FITTED IN
SUPRIME SUR
MANCA NEL
SUPRIMIDO EN
ENTFAELLT BEI -105.56/.67
NOT FITTED IN
SUPRIME SUR
MANCA NEL
SUPRIMIDO EN
IC5140
TDA8395
INTER-FACE
CONTROL
IDENT
SWITCH
ACC
BELL
PLL
DEEM-PHASIS
TUNING
SECAM-DECODER
NUR BEI -165.67/.70/.72
ONLY WITH
SEUL POUR
SOLO NELLA
SOLO CON
IC5150
TDA4665
PLL CLOCK PROZ.
LINESTORE
LINESTORE

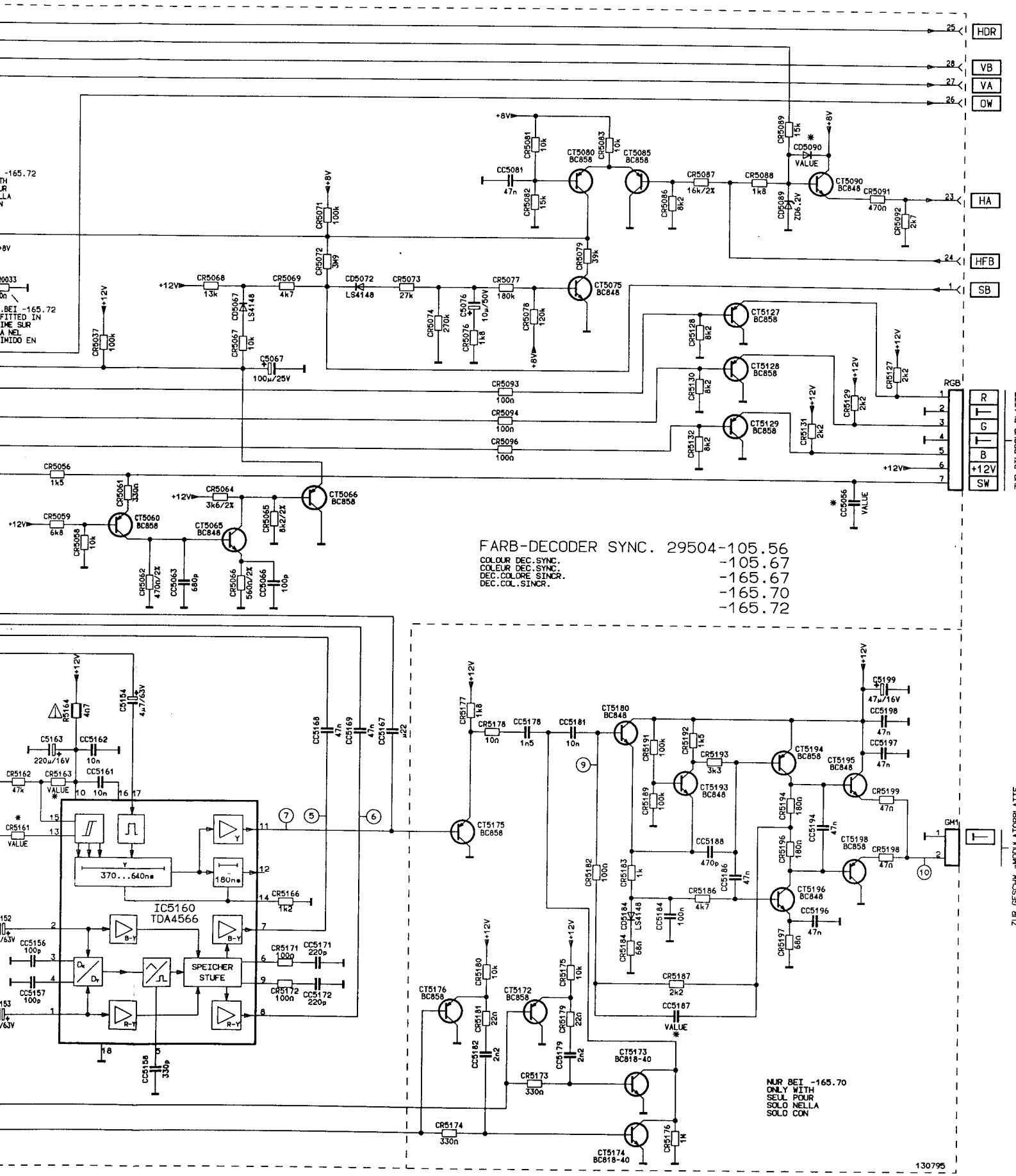
FARB-DECODER SYNC. 29504-105.56
COLOUR DEC.SYNC. -105.67
COLEUR DEC.SYNC. -165.67
DEC.COLORE SINCR. -165.70
DEC.COL.SINCR. -165.72
IC5160
TDA4566
SPEICHER STUFE
370...640ns
180ns
NUR BEI -165.70
ONLY WITH
SEUL POUR
SOLO NELLA
SOLO CON
HDR
VB
VA
OW
HA
HFB
SB
RGB
R
G
B
+12V
SW
GM1
130795

Tuner

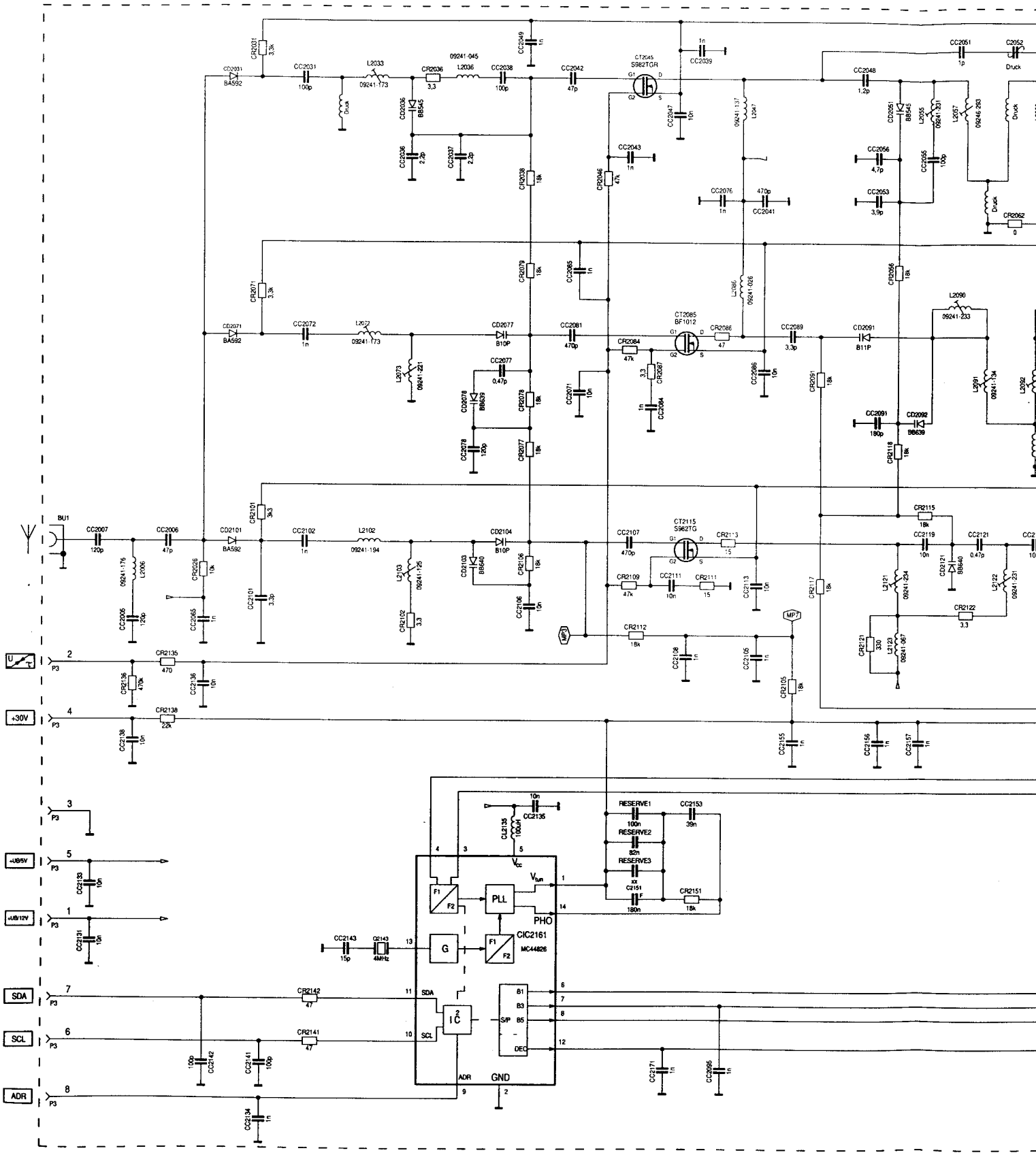
BU1
U
+30V
SDA
SCL
ADR
PLL
PHO
CIC2161
MC44826
GND
ADR
SDA
SCL
RESERVE1
RESERVE2
RESERVE3
CT2045
S982TGR
CT2085
BF1012
CT2115
S982TG
MP7
MP5

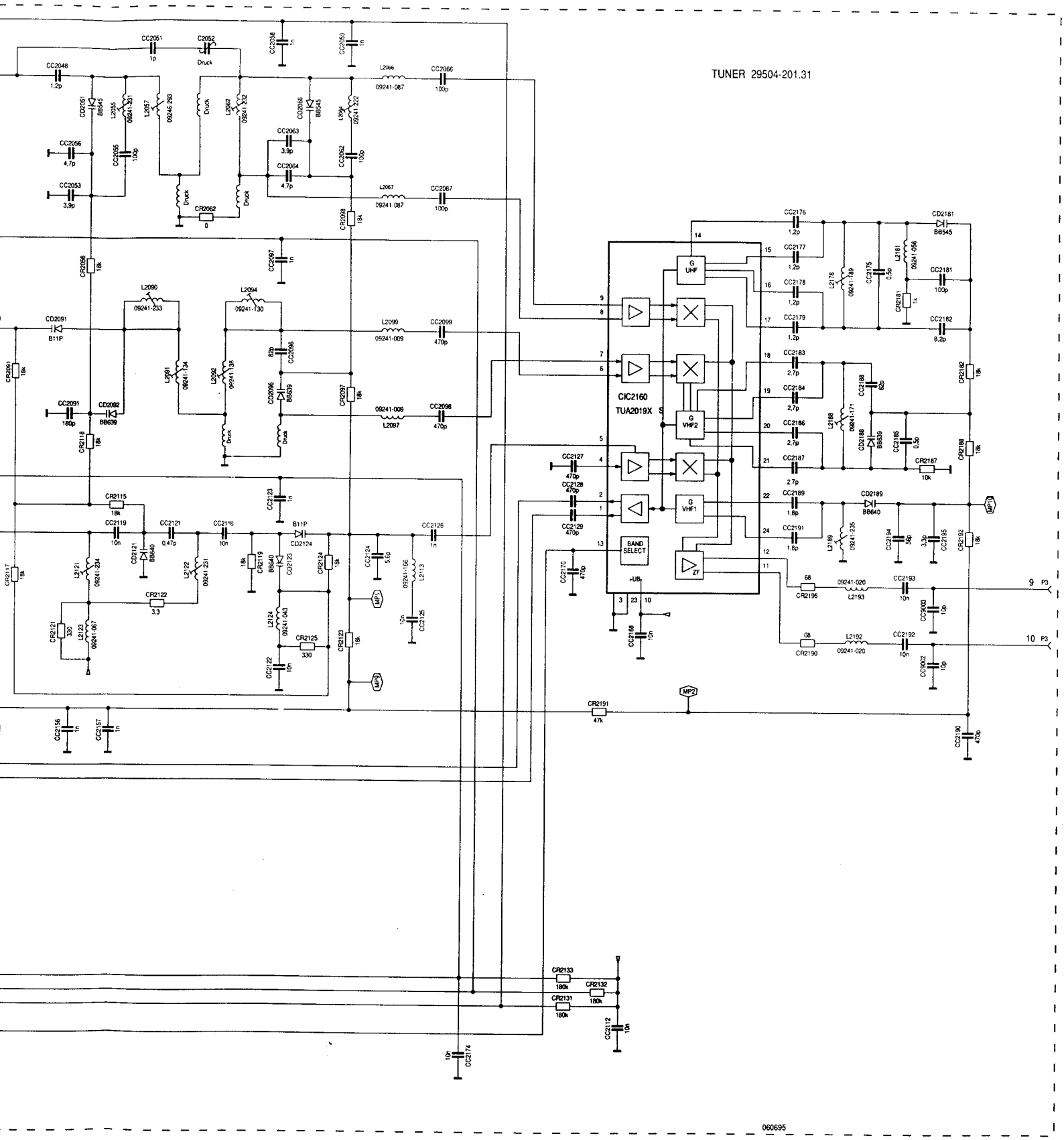
TUNER 29504-201.31
CIC2160
TUA2019X S
G UHF
G VHF2
G VHF1
BAND SELECT
ZF
060695

Bildrohrplatte / CRT Panel / Piastra Cinescopio

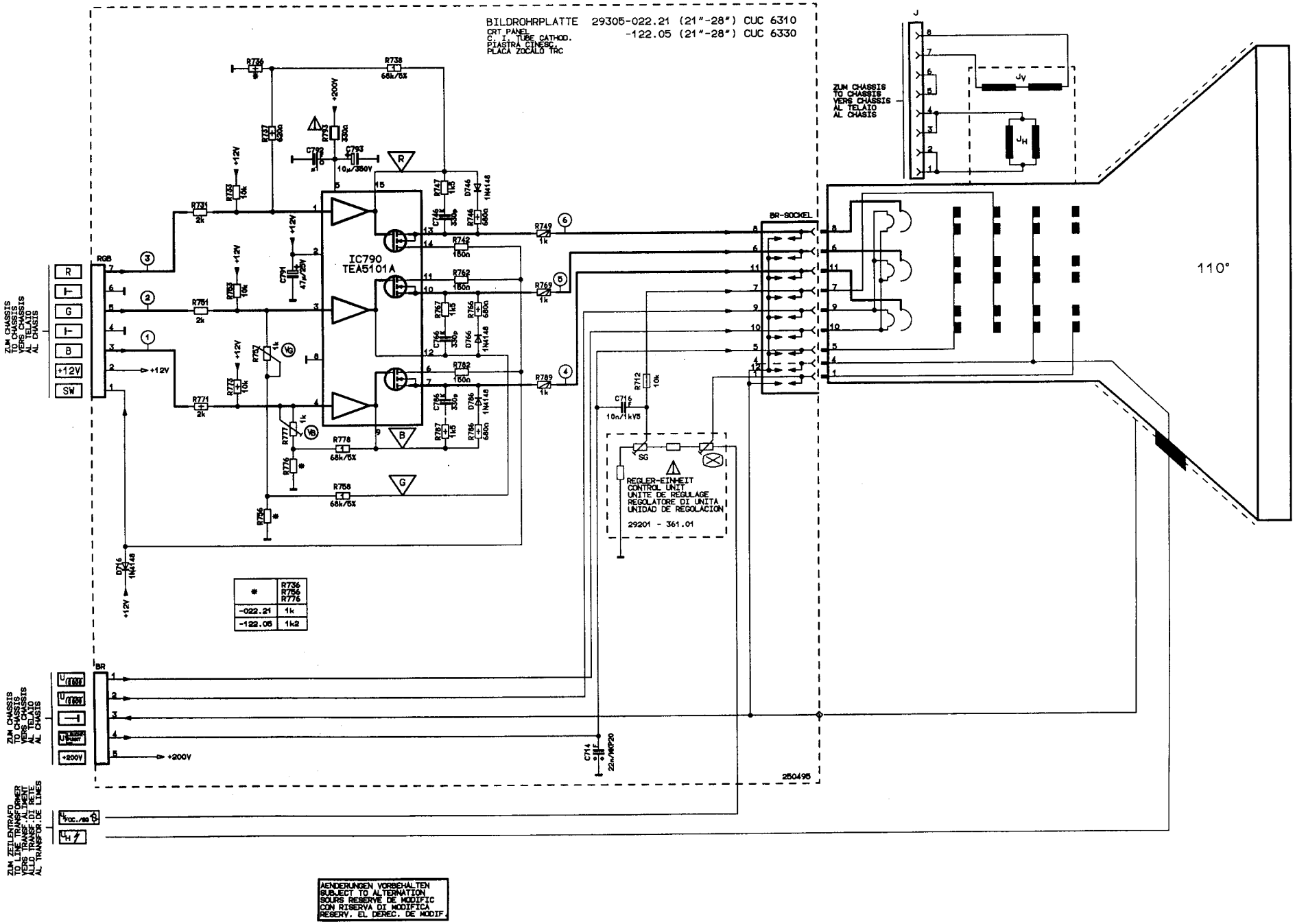

*	R736 R756 R776
-022.21	1k
-122.05	1k2

Bedieneinheit / Control Unit / Unita di Comando

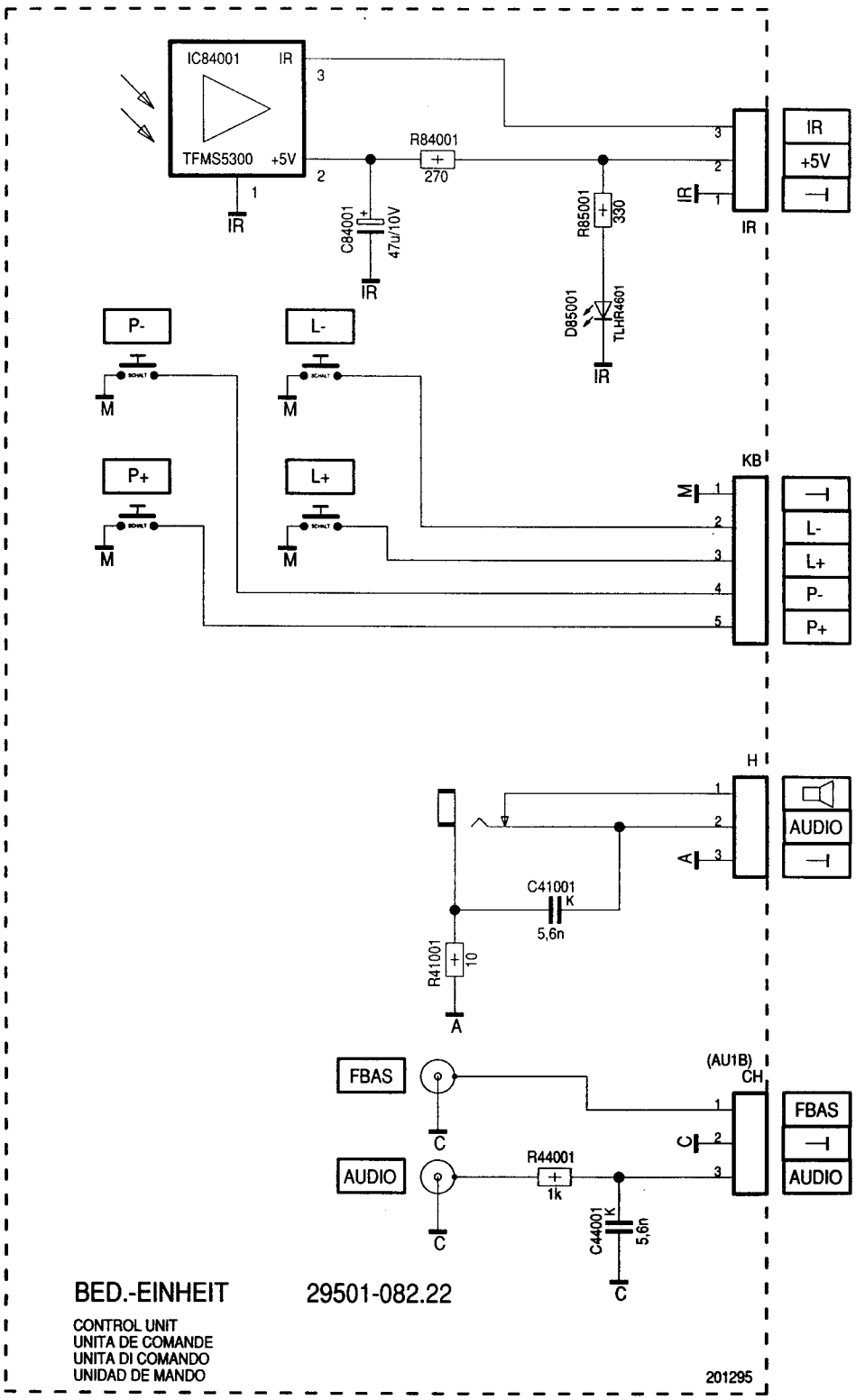

FEUR CUC 6310 T 70-740 TEXT
DRUCK: 29304-702.94

Bedieneinheit / Control Unit / Unita di Comando

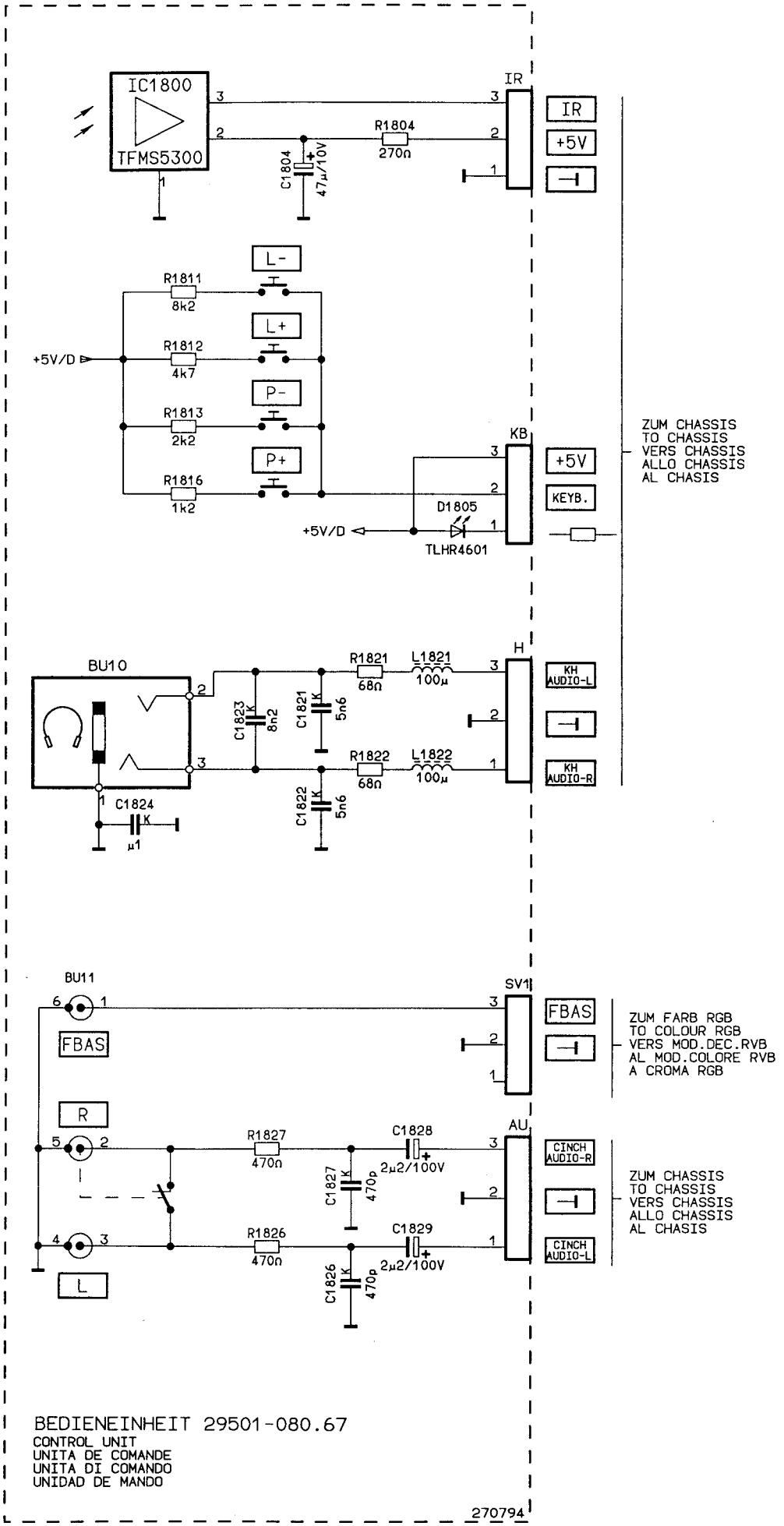

ZUR BILDROHR-PLATTE
TO CRT BASE
VERS C. TUBE CATHOD
ALLA PIASTRA CINESC.
A LA PLACA-ZOCALO TRC

TO VELOCITY MODULATION BOARD
VERS PLAQUE REGULATEUR DE VITESSE
ALLA PIASTRA MODULATORE DI VELOCITA
A LA PLACA MODULADOR DE VELOCIDAD

Bildrohrplatte / CRT Panel / Piastra Cinescopio

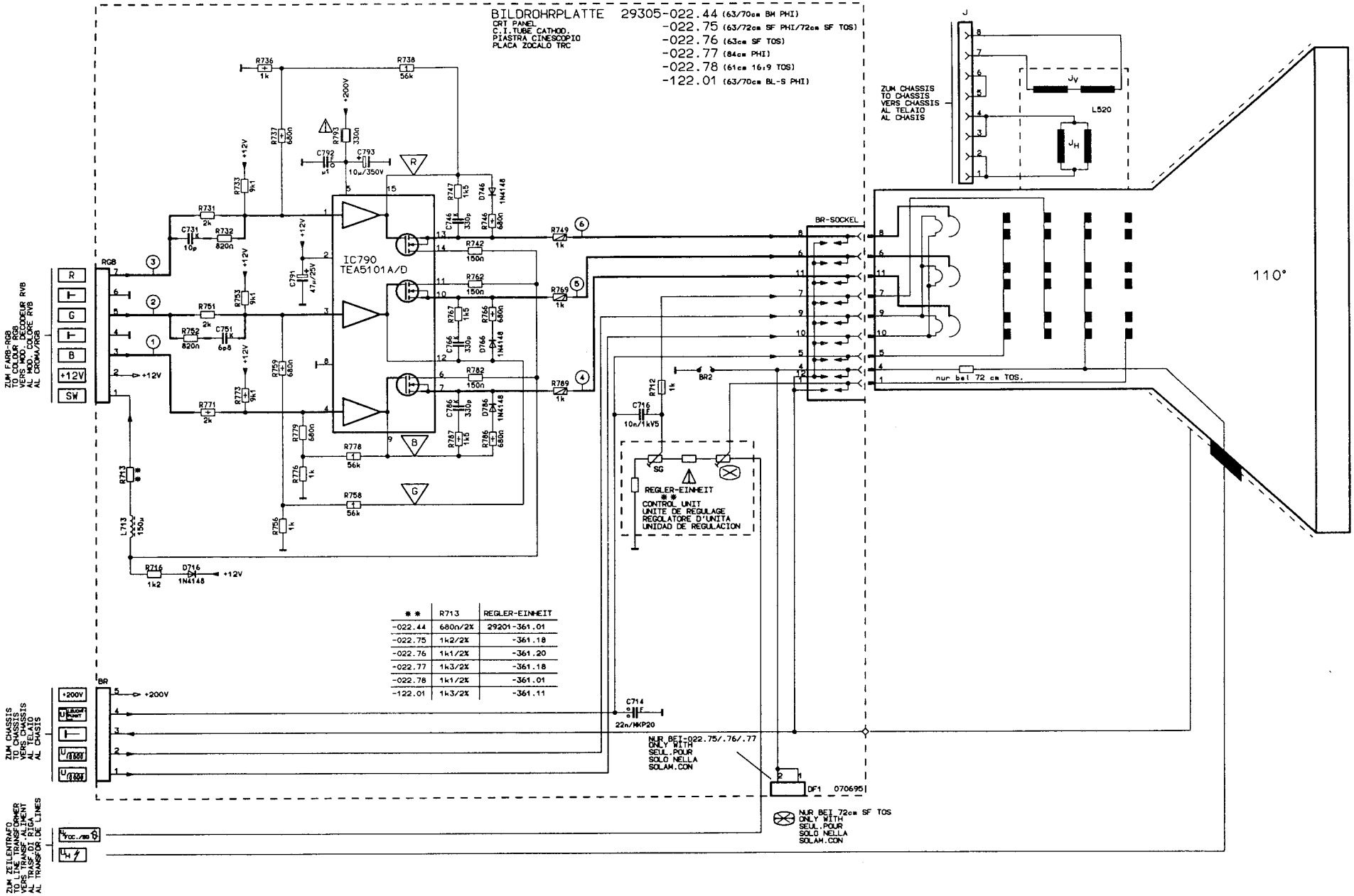

**	R713	REGLER-EINHEIT
-022.44	680Ω/2%	29201-361.01
-022.75	1k2/2%	-361.18
-022.76	1k1/2%	-361.20
-022.77	1k3/2%	-361.18
-022.78	1k1/2%	-361.01
-122.01	1k3/2%	-361.11

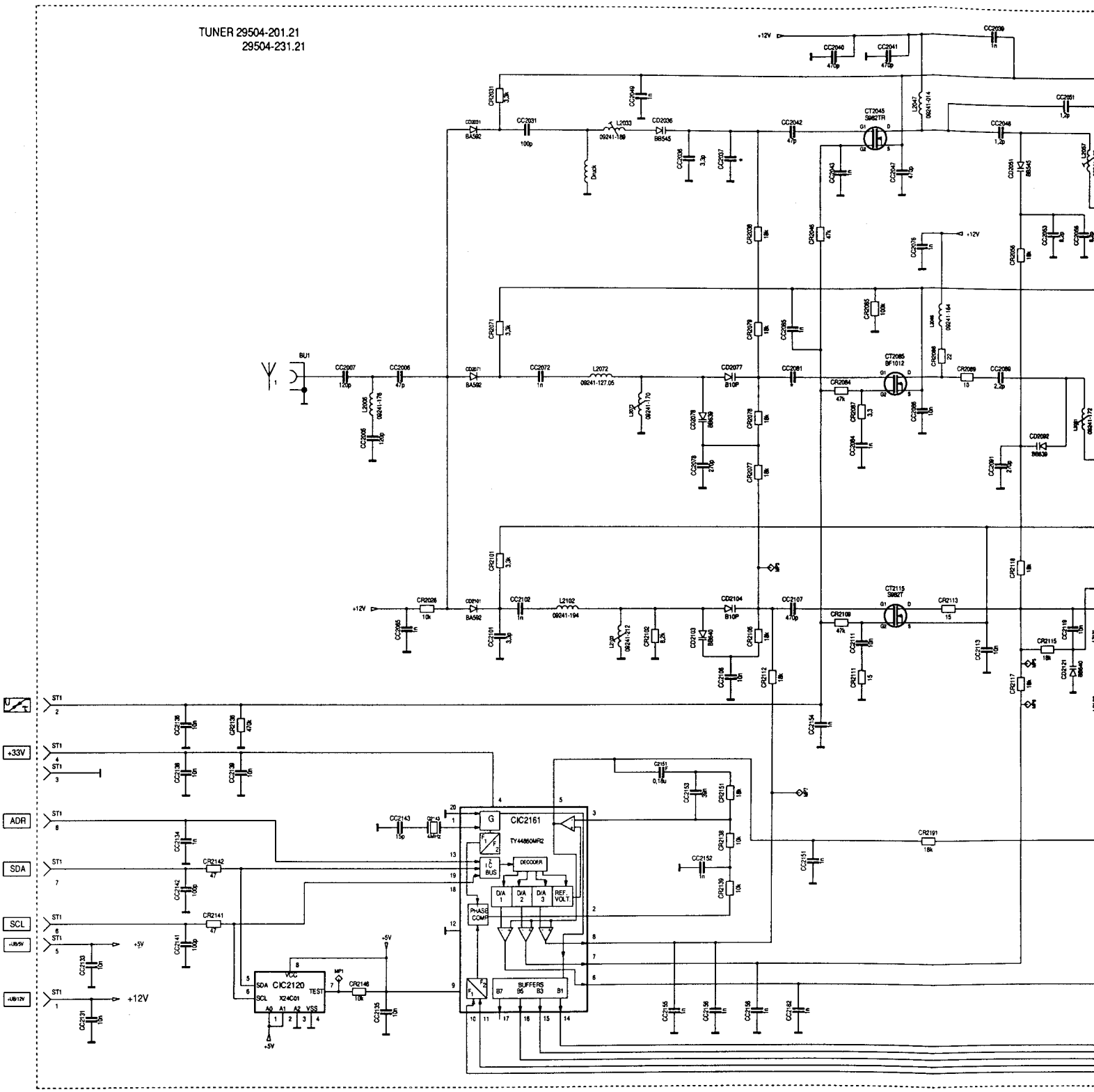
TUNER 29504-201.21
29504-231.21
+12V
BU1
CT2045 S962TR
CT2065 BF1012
CT2115 S962T
CIC2161
TY44860MR2
DECODER
D/A 1
D/A 2
D/A 3
REF. VOLT.
PHASE COMP
BUFFERS
CIC2120
X24C01
+33V
ADR
SDA
SCL
+5V
+12V

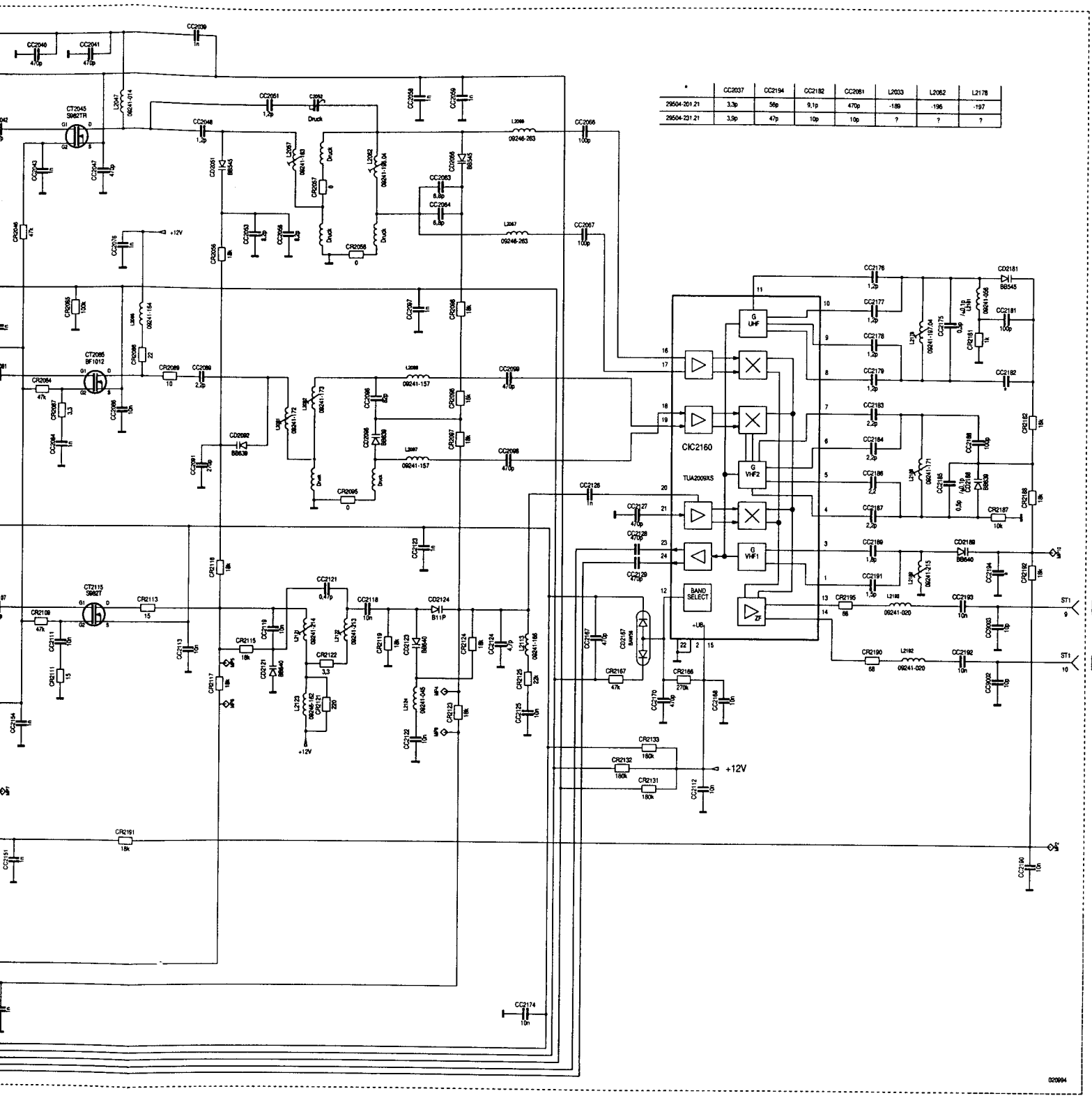

*	CC2037	CC2194	CC2182	CC2081	L2033	L2062	L2178
29504-201.21	3,3p	56p	9,1p	470p	-189	-196	-197
29504-231.21	3,9p	47p	10p	10p	?	?	?

Abstimm Textbaustein / Tuning Text Module / Mod. Sintonia Televideo

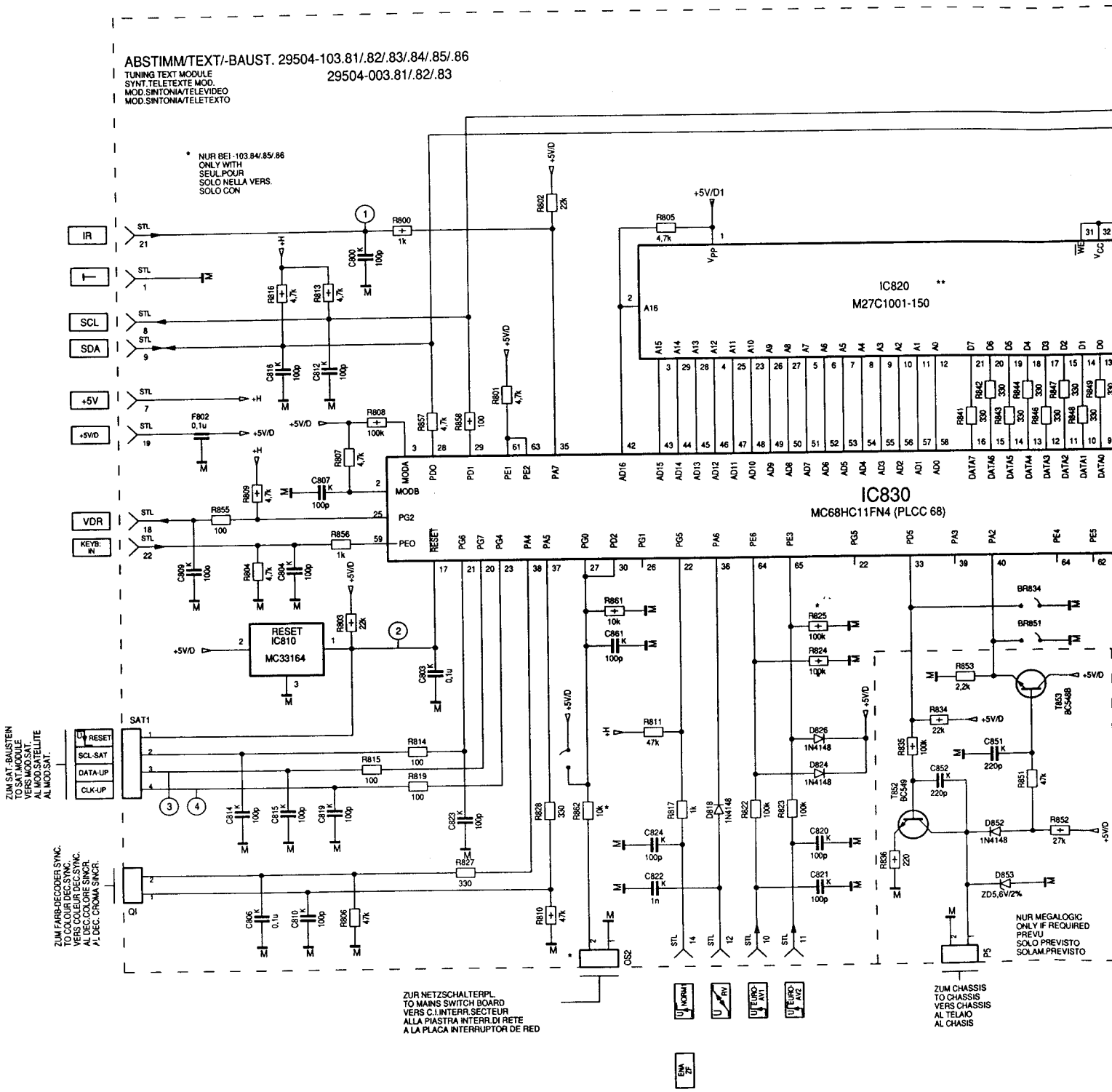

**	IC 820	IC 2800
-103.81/.84	19798-265...	SA5281ZP/E
-103.82/.85	19798-267...	SA5281ZP/E
-103.83/.86	19798-268...	SA5281ZP/E
-003.81	19798-287...	SA5281ZP/E
-003.82	19798-295...	SA5281ZP/E
-003.83	19798-289...	SA5281ZP/E

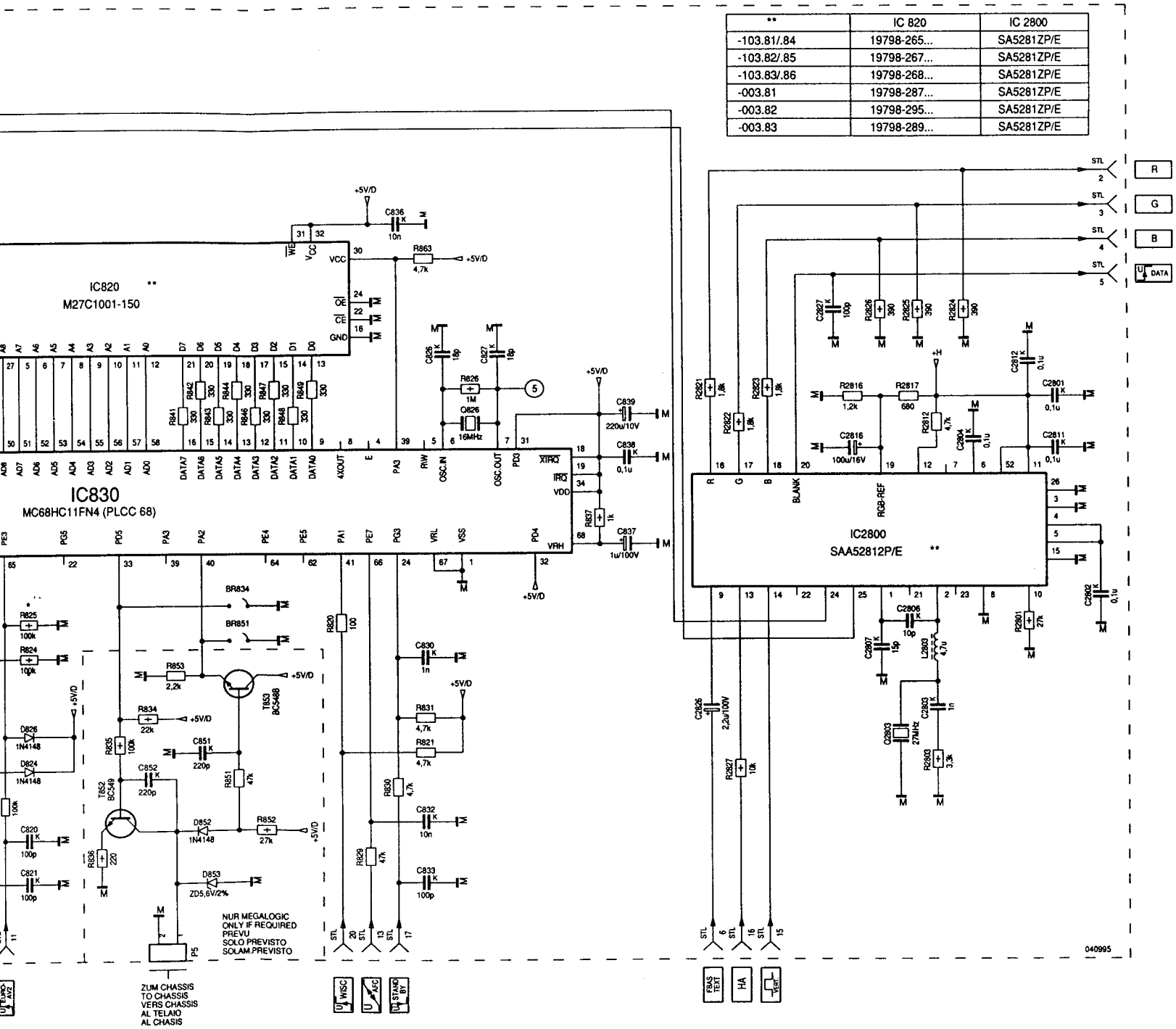

Abstimm-Textbaustein / Tuning Text Module / Mod. Sintonia Televideo

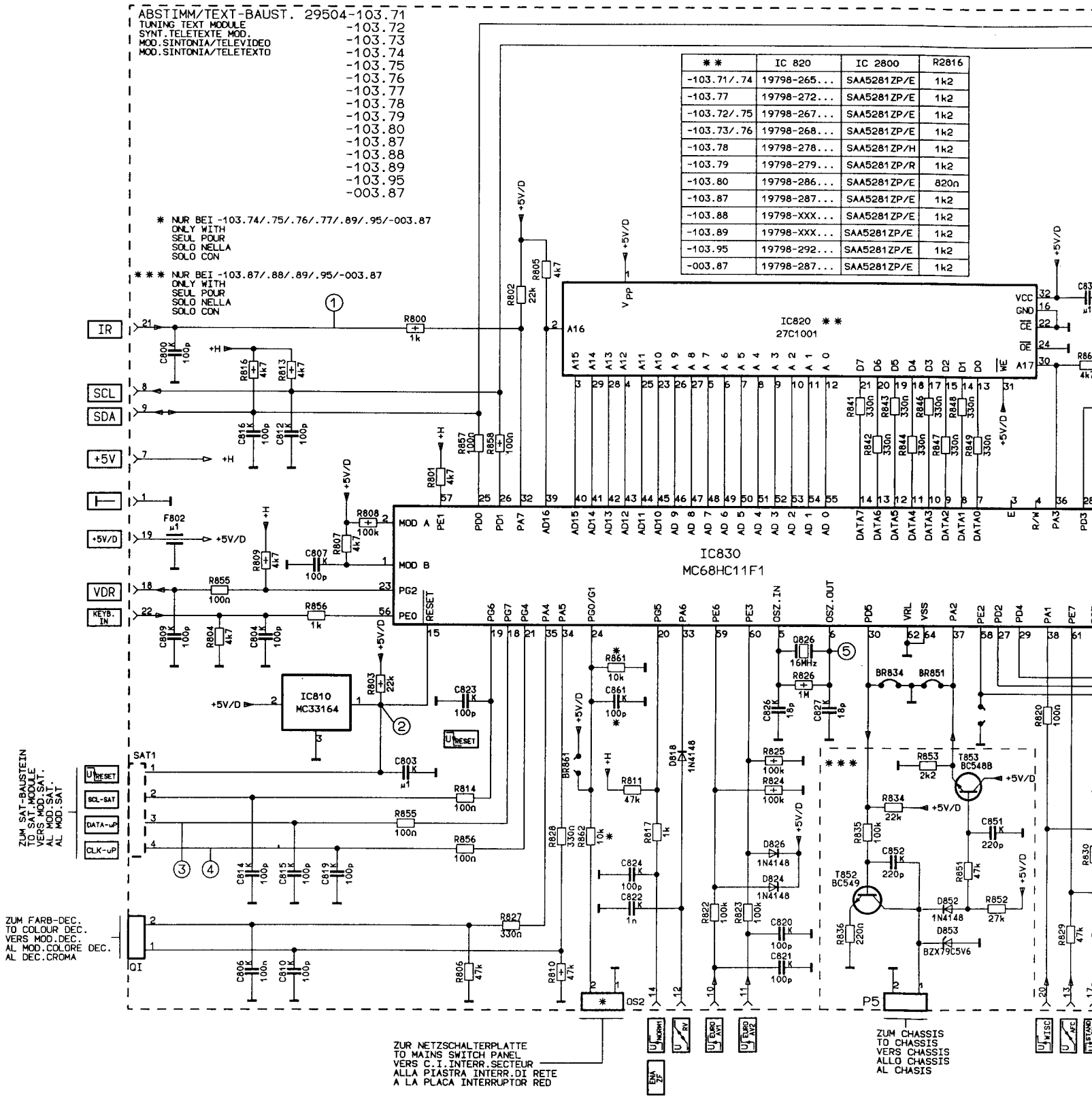

**	IC 820	IC 2800	R2816
-103.71/.74	19798-265...	SAA5281ZP/E	1k2
-103.77	19798-272...	SAA5281ZP/E	1k2
-103.72/.75	19798-267...	SAA5281ZP/E	1k2
-103.73/.76	19798-268...	SAA5281ZP/E	1k2
-103.78	19798-278...	SAA5281ZP/H	1k2
-103.79	19798-279...	SAA5281ZP/R	1k2
-103.80	19798-286...	SAA5281ZP/E	820Ω
-103.87	19798-287...	SAA5281ZP/E	1k2
-103.88	19798-XXX...	SAA5281ZP/E	1k2
-103.89	19798-XXX...	SAA5281ZP/E	1k2
-103.95	19798-292...	SAA5281ZP/E	1k2
-003.87	19798-287...	SAA5281ZP/E	1k2

RTV servis Horvat
Kešinci, 31402 Semeljci
Tel : 031-856-637
Tel / fax : 031-856-139
Mob : 098-788-319
rtv-servis-horvat@os.tel.hr
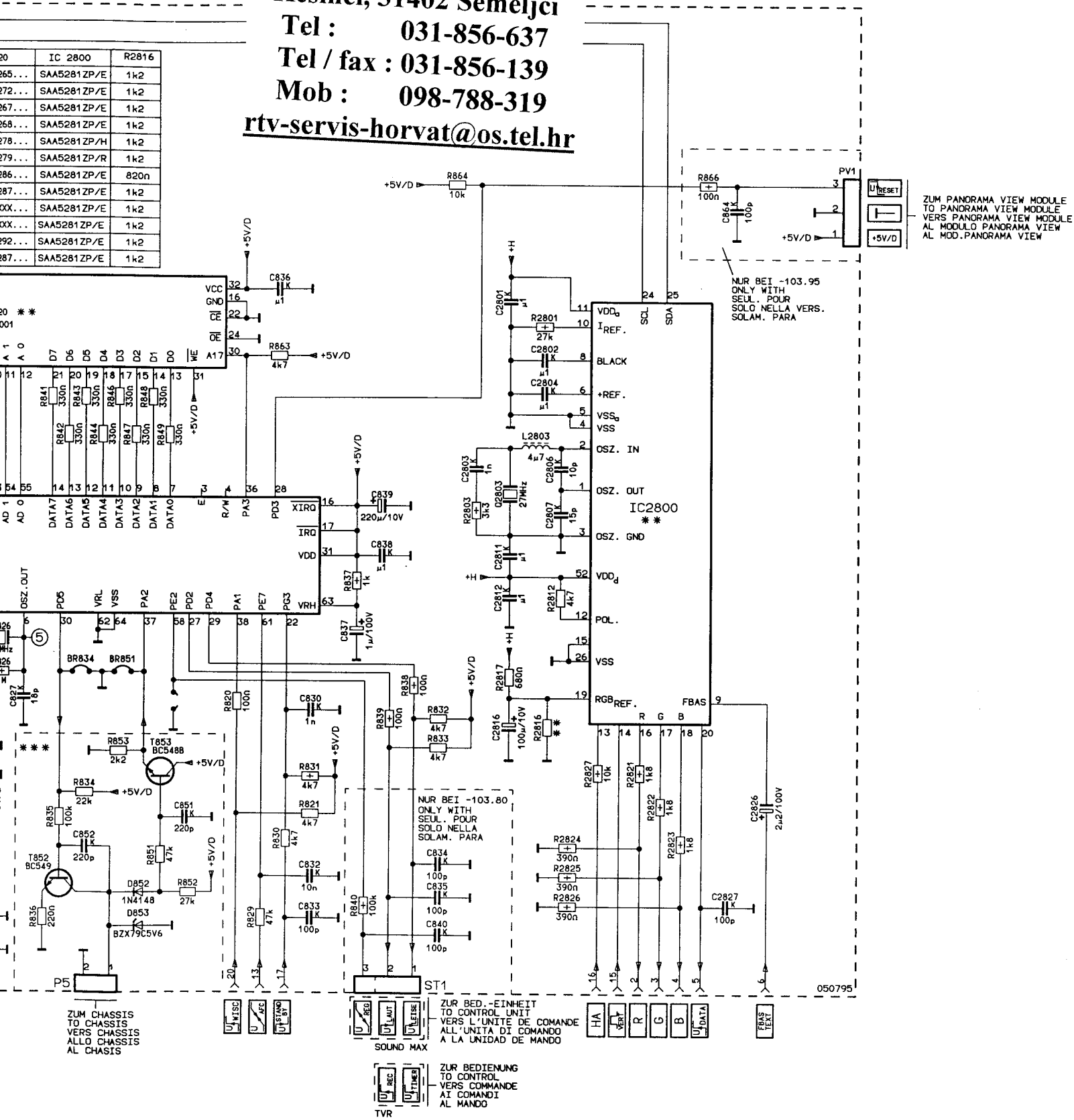
20	IC 2800	R2816
265...	SAA5281ZP/E	1k2
272...	SAA5281ZP/E	1k2
267...	SAA5281ZP/E	1k2
268...	SAA5281ZP/E	1k2
278...	SAA5281ZP/H	1k2
279...	SAA5281ZP/R	1k2
286...	SAA5281ZP/E	820Ω
287...	SAA5281ZP/E	1k2
XXX...	SAA5281ZP/E	1k2
XXX...	SAA5281ZP/E	1k2
292...	SAA5281ZP/E	1k2
287...	SAA5281ZP/E	1k2