Servicehinweise für Schaltnetzteil: Gerät mit Netztrenntransformator betreiben. Primärseite des Schaltnetzteiles liegt an Netzpotential. Bei fehlender Sekundärspannung oder Takten des Netzteiles Sekundärstromkreise einzeln unterbrechen und Funktion überprüfen.
Suchschema bei Nichtschwingen des Sperrwandlers.

- Anlaufspannung (Pin 9/5) < 8 V Anlauf über Di 616 u. R 616.
- Referenzspannung (Pin 1) ca. 6 V
- Startimpuls (Pin 4) ①
- Basisstromansteuerung (Pin 7) ②

C 626 muß vor Wechsel des IC 631 entladen sein! Netzteilregelbereich 160 bis 260 V~

Service hints for switch-mode power supply: operate set with mains-isolating transformer (n. b. the primary side of the SM power supply is normally not isolated, if there is no secondary voltage or the power supply pulsates, disconnect the secondary circuits individually and check operation. Fault finding scheme if blocking function prevents oscillation:

- Starting voltage (Pin 9/5) < 8 V, starting via Di 616 and R 616
- Reference voltage (Pin 1) approx. 6 V
- Start pulse (Pin 4) ①
- Base current drive (Pin 7) ②

Before replacement of IC 631, C 626 must be discharged. Power supply range 160 to 260 V AC.

Avvertenze di Servizio dell'alimentatore: Alimentare l'apparecchio con un trasformatore separatore. Il lato primario dell'alimentatore è a potenziale di rete. Se viene a mancare la tensione del secondario o in caso di intervento ritmico dell'alimentatore, interrompere uno alla volta i circuiti dell secondario e controllarne la funzione. Se il trasduttore di interdizione non viene eccitato, ricercare il guasto secondo lo schema seguente:

- Tensione di avviamento (pin 9/5) < 8 V. Avviamento tramite Di 616 e R 616.
- Tensione di riferimento (pin 1) ca. 6 V.
- Impulso di avviamento (pin 4) ①
- Pilotaggio della corrente di base (pin 7) ②

Il C 626 deve essere scarico prima di cambiare l'IC 631! Campo di regolazione dell'alimentatore: 160 a 260 V ~.

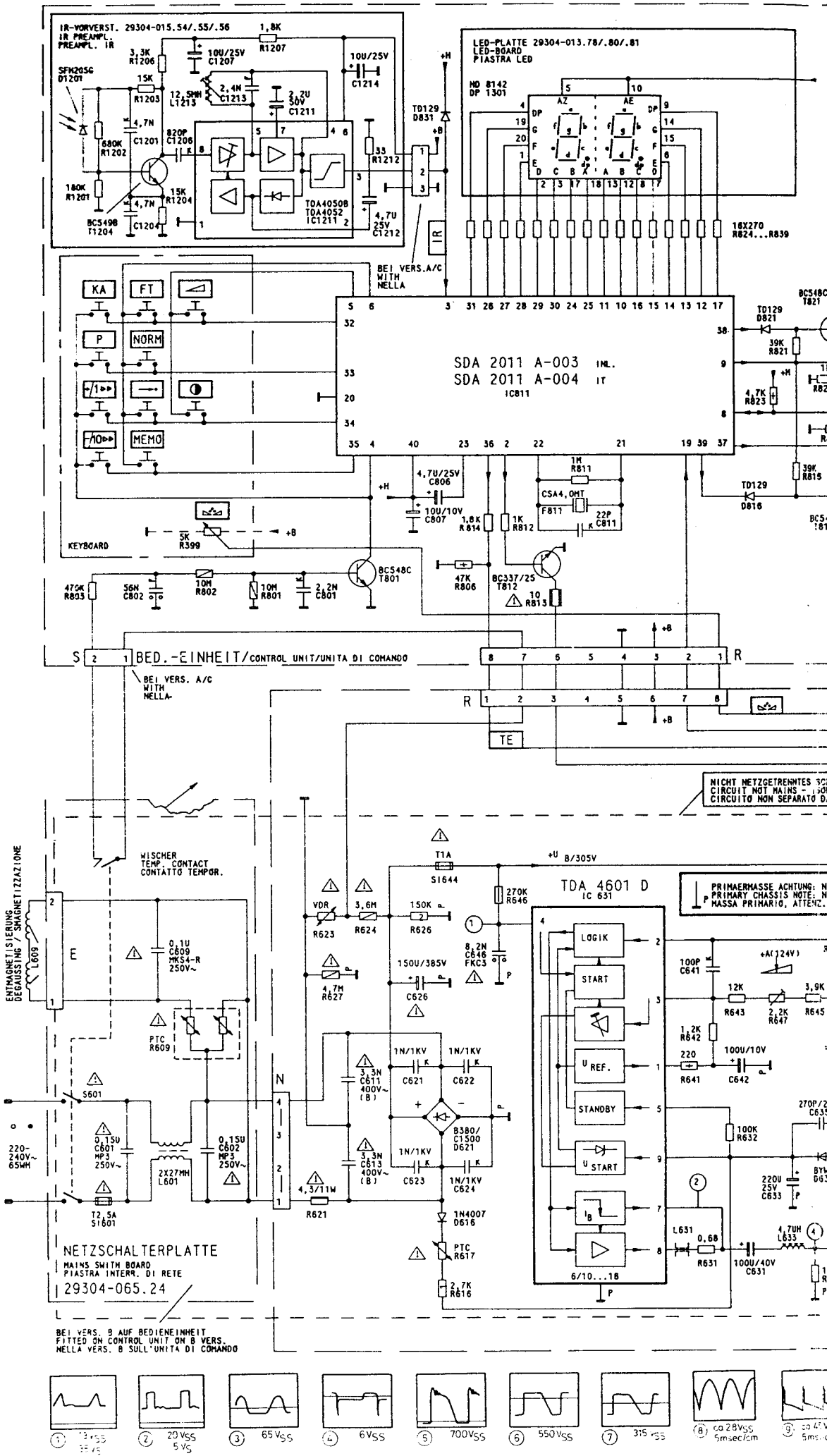

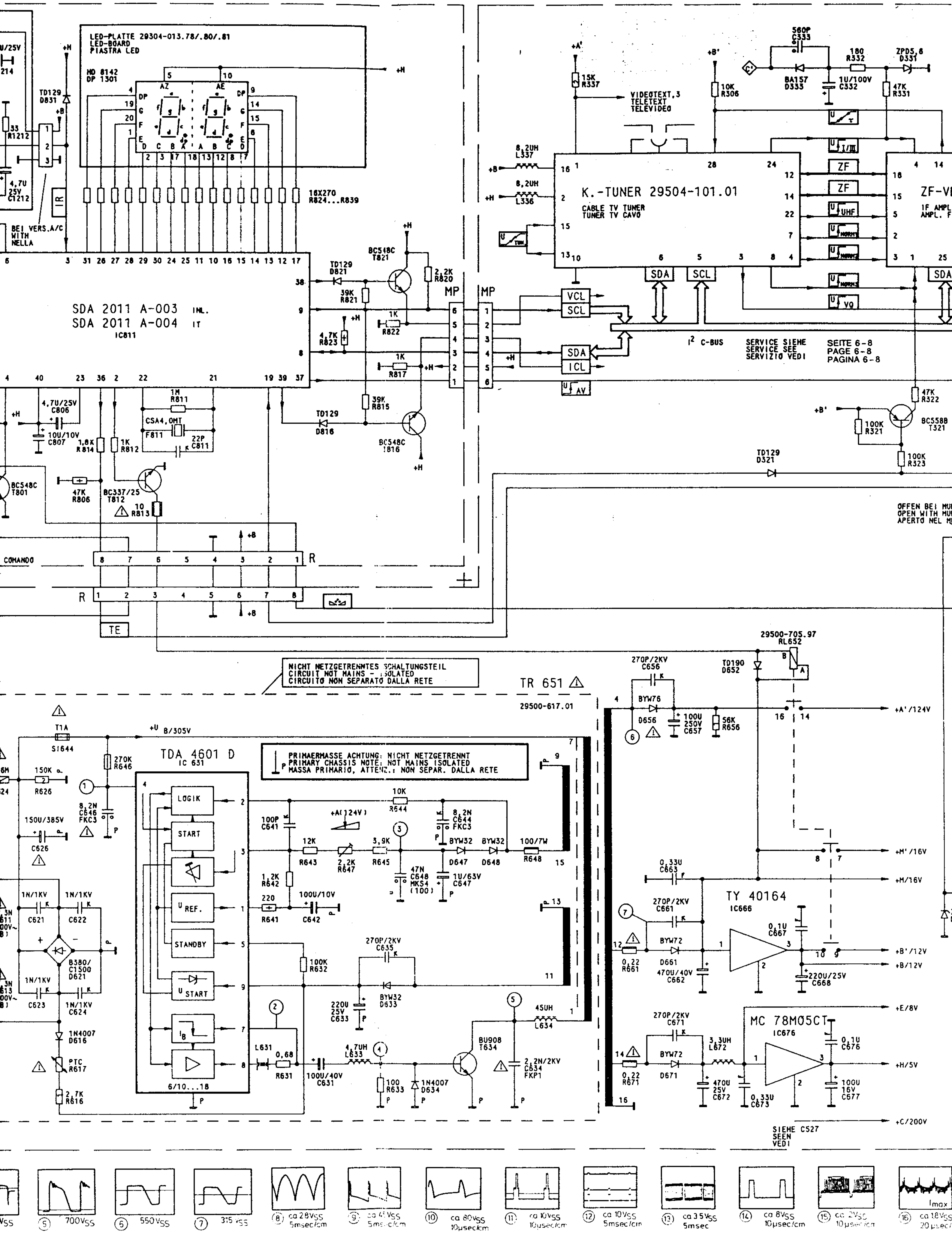

LED-PLATTE 29304-013.78/.80/.81
LED-BOARD
PIASTRA LED
HD 8142
DP 1301
16X270
R824...R839
BEI VERS.A/C
WITH
NELLA
SDA 2011 A-003 INL.
SDA 2011 A-004 IT
IC811
BC548C
T821
MP
VCL
SCL
SDA
ICL
K.-TUNER 29504-101.01
CABLE TV TUNER
TUNER TV CAVO
VIDEOTEXT,3
TELETEXT
TELEVIDEO
ZF-VE
IF AMPL.
ZF
I² C-BUS
SERVICE SIEHE
SERVICE SEE
SERVIZIO VEDI
SEITE 6-8
PAGE 6-8
PAGINA 6-8
BC558B
T321
OFFEN BEI MUL
OPEN WITH MUL
APERTO NEL MU
COMANDO
TE
29500-705.97
RL652
NICHT NETZGETRENNTES SCHALTUNGSTEIL
CIRCUIT NOT MAINS - ISOLATED
CIRCUITO NON SEPARATO DALLA RETE
TR 651
29500-617.01
TDA 4601 D
IC 631
LOGIK
START
STANDBY
PRIMAERMASSE ACHTUNG: NICHT NETZGETRENNT
PRIMARY CHASSIS NOTE: NOT MAINS ISOLATED
MASSA PRIMARIO, ATTENZ.: NON SEPAR. DALLA RETE
BU908
T634
TY 40164
IC666
MC 78M05CT
IC676
+A'/124V
+M'/16V
+M/16V
+B'/12V
+B/12V
+E/8V
+H/5V
+C/200V
SIEHE C527
SEEN
VEDI
700Vss
550Vss
315Vss
ca 28Vss 5msec/cm
ca 80Vss 10µsec/cm
ca 10Vss 10µsec/cm
ca 10Vss 5msec/cm
ca 35Vss 5msec
ca 8Vss 10µsec/cm
Imax

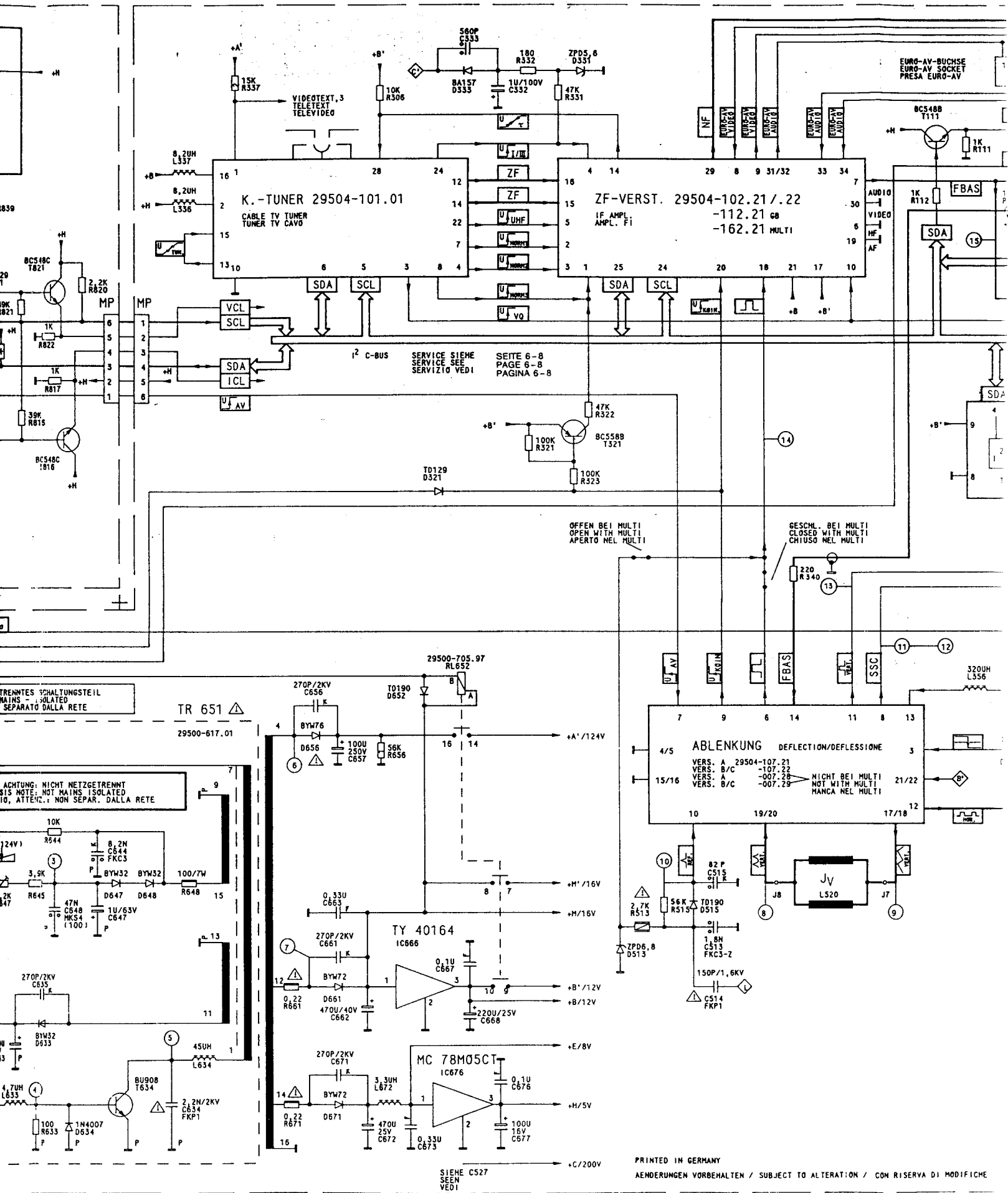
K.-TUNER 29504-101.01
CABLE TV TUNER
TUNER TV CAVO
ZF-VERST. 29504-102.21/.22
-112.21 GB
-162.21 MULTI
IF AMPL.
AMPL. FI
EURO-AV-BUCHSE
EURO-AV SOCKET
PRESA EURO-AV
VIDEOTEXT,3
TELETEXT
TELEVIDEO
I² C-BUS
SERVICE SIEHE
SERVICE SEE
SERVIZIO VEDI
SEITE 6-8
PAGE 6-8
PAGINA 6-8
OFFEN BEI MULTI
OPEN WITH MULTI
APERTO NEL MULTI
GESCHL. BEI MULTI
CLOSED WITH MULTI
CHIUSO NEL MULTI
TRENNTES SCHALTUNGSTEIL
MAINS - ISOLATED
SEPARATO DALLA RETE
TR 651
29500-617.01
ACHTUNG: NICHT NETZGETRENNT
NOTE: NOT MAINS ISOLATED
ATTENZ.: NON SEPAR. DALLA RETE
29500-705.97
RL652
TY 40164
IC666
MC 78M05CT
IC676
ABLENKUNG
DEFLECTION/DEFLESSIONE
VERS. A 29504-107.21
VERS. B/C -107.22
VERS. A -007.28
VERS. B/C -007.29
NICHT BEI MULTI
NOT WITH MULTI
MANCA NEL MULTI
+A'/124V
+H'/16V
+H/16V
+B'/12V
+B/12V
+E/8V
+H/5V
+C/200V
SIEHE C527
SEEN
VEDI
PRINTED IN GERMANY
AENDERUNGEN VORBEHALTEN / SUBJECT TO ALTERATION / CON RISERVA DI MODIFICHE

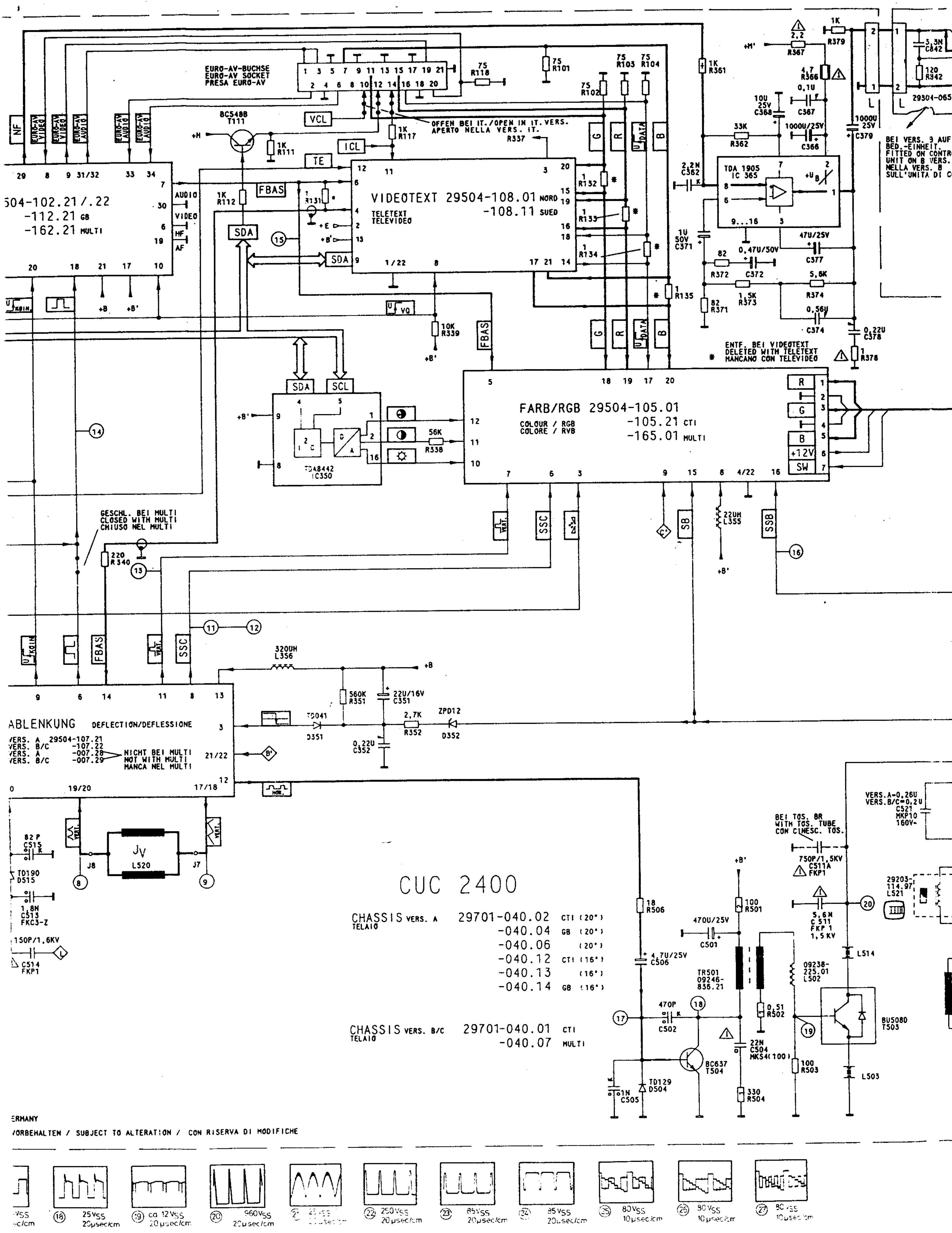

EURO-AV-BUCHSE
EURO-AV SOCKET
PRESA EURO-AV
BC548B
T111
OFFEN BEI IT./OPEN IN IT. VERS.
APERTO NELLA VERS. IT.
504-102.21/.22
-112.21 GB
-162.21 MULTI
VIDEOTEXT 29504-108.01 NORD
-108.11 SUED
TELETEXT
TELEVIDEO
TDA 1905
IC 365
BEI VERS. 3 AUF
BED.-EINHEIT.
FITTED ON CONTR
UNIT ON 8 VERS.
NELLA VERS. 8
SULL'UNITA DI C
ENTF. BEI VIDEOTEXT
DELETED WITH TELETEXT
MANCANO CON TELEVIDEO
FARB/RGB 29504-105.01
COLOUR / RGB
COLORE / RVB
-105.21 CTI
-165.01 MULTI
TDA8442
IC350
GESCHL. BEI MULTI
CLOSED WITH MULTI
CHIUSO NEL MULTI
ABLENKUNG DEFLECTION/DEFLESSIONE
VERS. A 29504-107.21
VERS. B/C -107.22
VERS. A -007.28
VERS. B/C -007.29
NICHT BEI MULTI
NOT WITH MULTI
MANCA NEL MULTI
BEI TOS. 8R
WITH TOS. TUBE
CON CINESC. TOS.
CUC 2400
CHASSIS VERS. A 29701-040.02 CTI (20")
TELAIO
-040.04 GB (20")
-040.06 (20")
-040.12 CTI (16")
-040.13 (16")
-040.14 GB (16")
CHASSIS VERS. B/C 29701-040.01 CTI
TELAIO
-040.07 MULTI
ERMANY
VORBEHALTEN / SUBJECT TO ALTERATION / CON RISERVA DI MODIFICHE

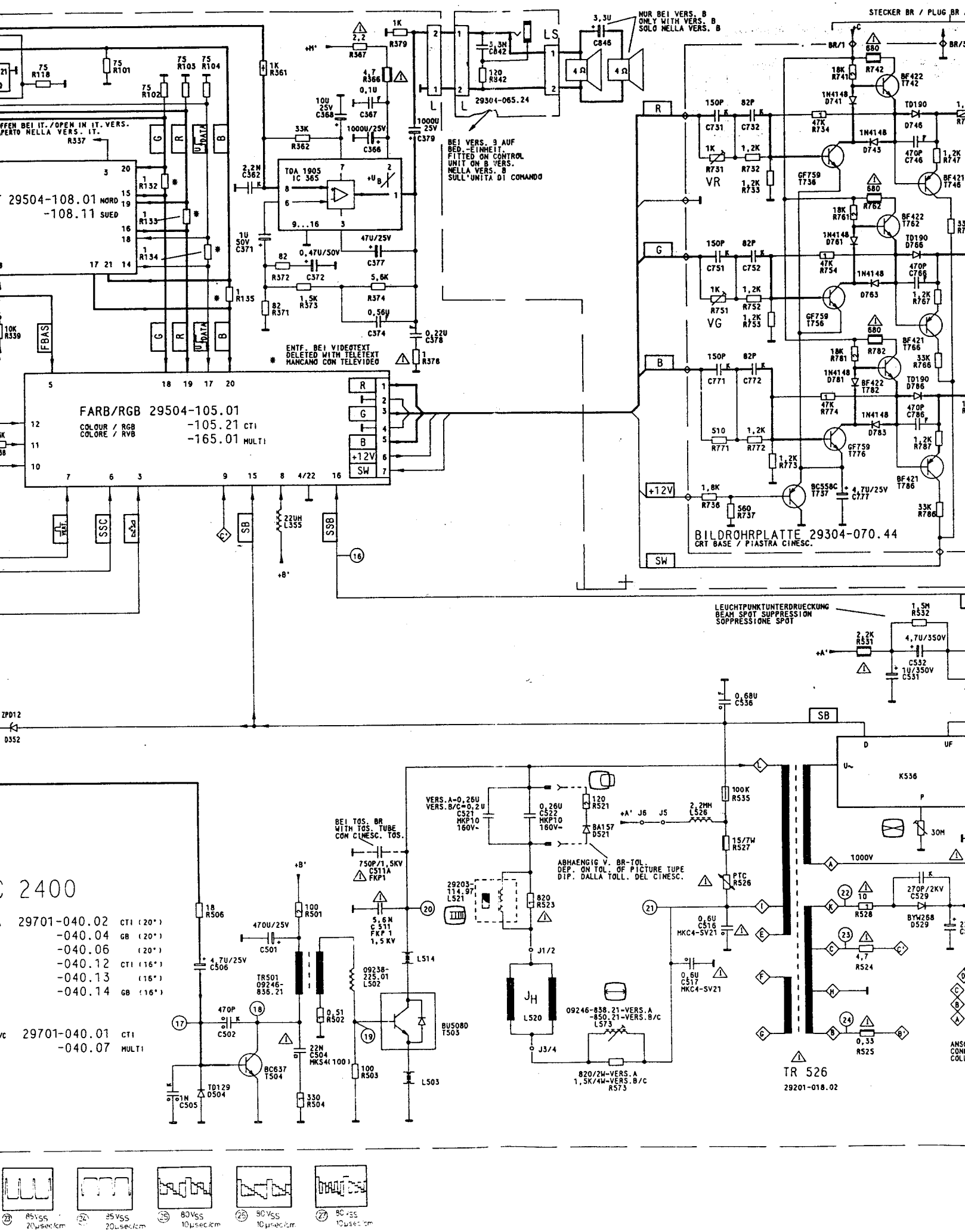
STECKER BR / PLUG BR
NUR BEI VERS. B
ONLY WITH VERS. B
SOLO NELLA VERS. B
29504-065.24
BEI VERS. 9 AUF
BED.-EINHEIT.
FITTED ON CONTROL
UNIT ON B VERS.
NELLA VERS. B
SULL'UNITA DI COMANDO
TDA 1905
IC 36S
29504-108.01 NORD
-108.11 SUED
ENTF. BEI VIDEOTEXT
DELETED WITH TELETEXT
MANCANO CON TELEVIDEO
FARB/RGB 29504-105.01
COLOUR / RGB
COLORE / RVB
-105.21 CTI
-165.01 MULTI
BILDROHRPLATTE 29304-070.44
CRT BASE / PIASTRA CINESC.
LEUCHTPUNKTUNTERDRUECKUNG
BEAM SPOT SUPPRESSION
SOPPRESSIONE SPOT
BEI TOS. BR
WITH TOS. TUBE
CON CINESC. TOS.
ABHAENGIG V. BR-TOL.
DEP. ON TOL. OF PICTURE TUPE
DIP. DALLA TOLL. DEL CINESC.
TR 526
29201-018.02
29701-040.02 CTI (20")
-040.04 GB (20")
-040.06 (20")
-040.12 CTI (16")
-040.13 (16")
-040.14 GB (16")
29701-040.01 CTI
-040.07 MULTI

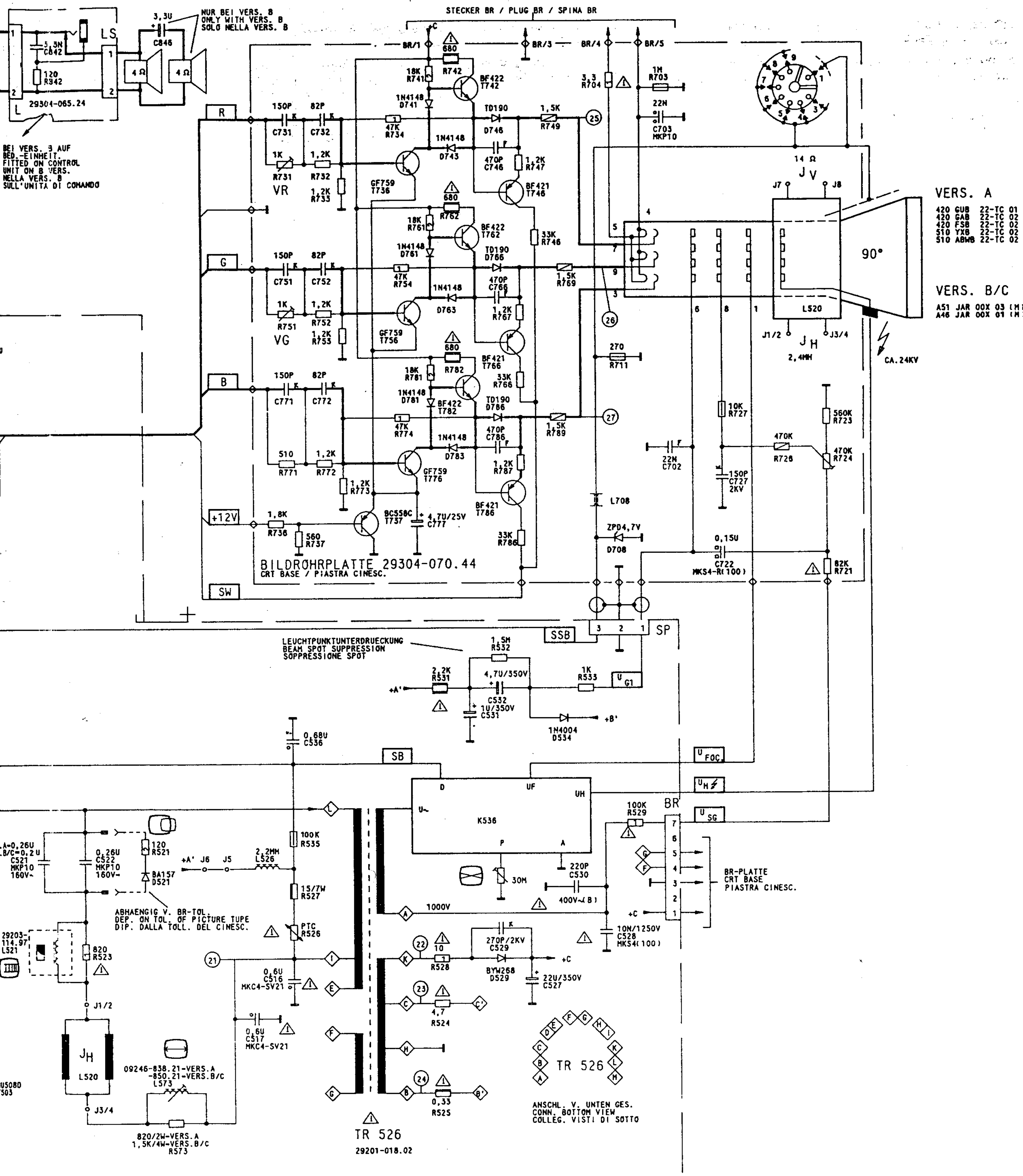
STECKER BR / PLUG BR / SPINA BR
NUR BEI VERS. B
ONLY WITH VERS. B
SOLO NELLA VERS. B
LS
29304-065.24
BEI VERS. B AUF
BED.-EINHEIT.
FITTED ON CONTROL
UNIT ON B VERS.
NELLA VERS. B
SULL'UNITÀ DI COMANDO
R
G
B
+12V
SW
VR
VG
BILDRÖHRPLATTE 29304-070.44
CRT BASE / PIASTRA CINESC.
VERS. A
420 GUB 22-TC 01
420 GAB 22-TC 02
420 FSB 22-TC 02
510 YXB 22-TC 02
510 ABWB 22-TC 02
90°
VERS. B/C
A51 JAR 00X 03
A46 JAR 00X 01
CA. 24KV
L520
2,4MH
SSB
SP
LEUCHTPUNKTUNTERDRUECKUNG
BEAM SPOT SUPPRESSION
SOPPRESSIONE SPOT
SB
K536
BR
BR-PLATTE
CRT BASE
PIASTRA CINESC.
ABHAENGIG V. BR-TOL.
DEP. ON TOL. OF PICTURE TUPE
DIP. DALLA TOLL. DEL CINESC.
09246-838.21-VERS.A
-850.21-VERS.B/C
L573
820/2W-VERS.A
1,5K/4W-VERS.B/C
R573
TR 526
29201-018.02
ANSCHL. V. UNTEN GES.
CONN. BOTTOM VIEW
COLLEG. VISTI DI SOTTO
1000V

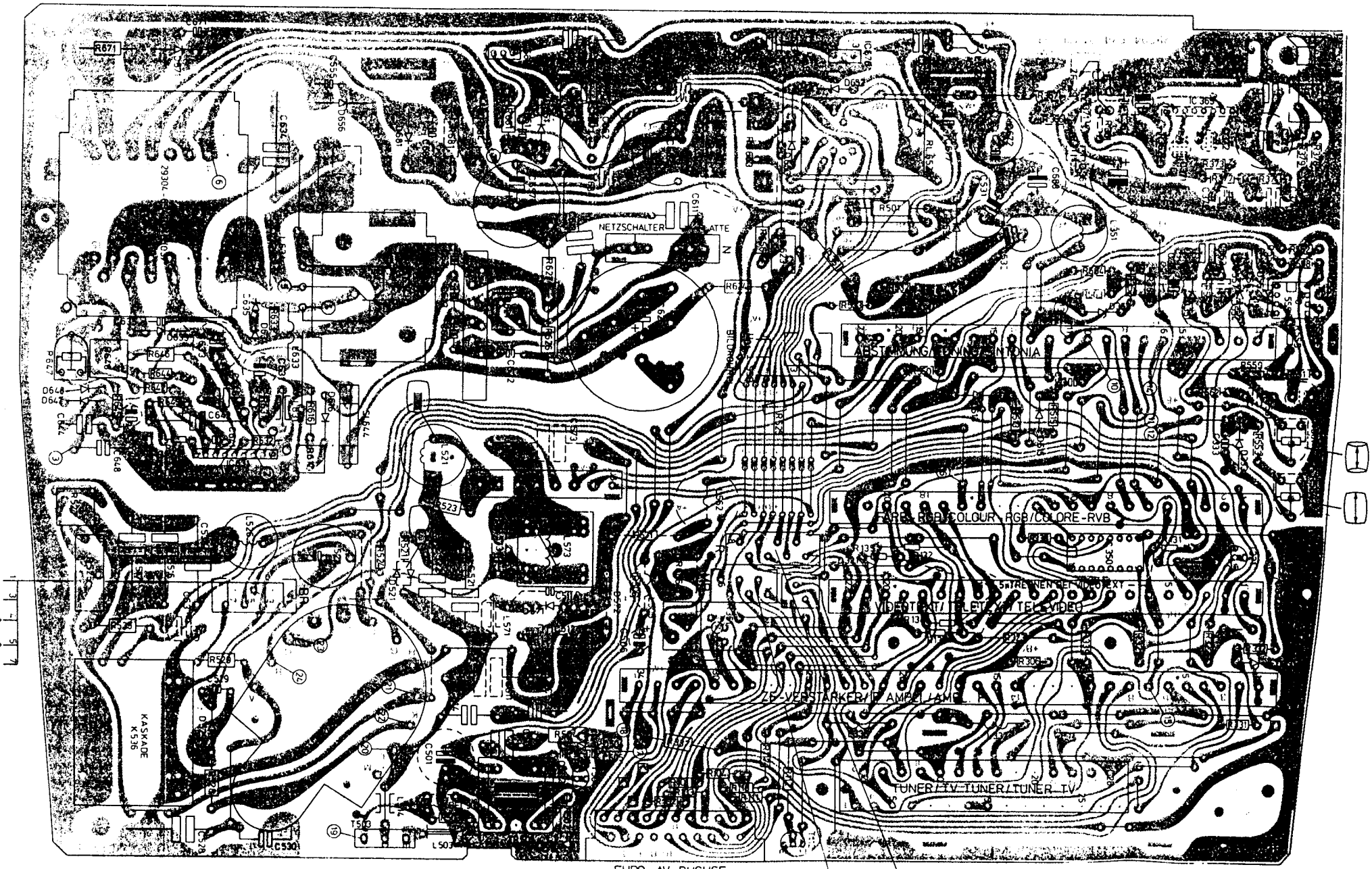
NETZSCHALTER
BILDROHR
ABSTIMMUNG/TUNING/SINTONIA
FARBE RGB/COLOUR RGB/COLORE-RVB
VIDEOTEXT/TELETEXT/TELEVIDEO
ZF-VERSTÄRKER/IF AMPL./AMPL. F.
TUNER/TV-TUNER/TUNER TV
KASKADE
K 536
EURO-AV-BUCHSE
EURO AV SOCKET
PRESA EURO AV
BEDIENEINHEIT-
STECKER MP
BEDIENEINHEIT-
STECKER R

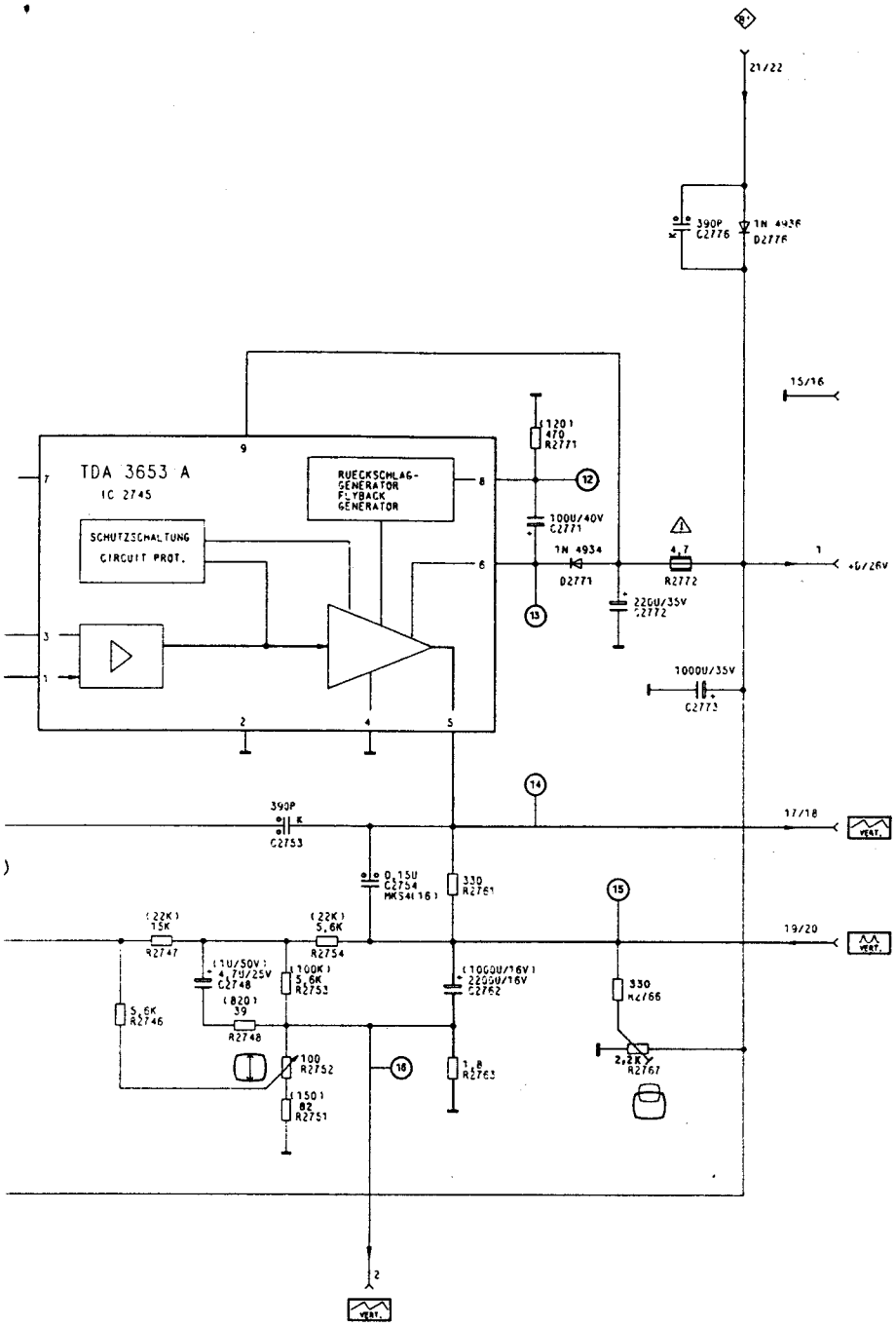

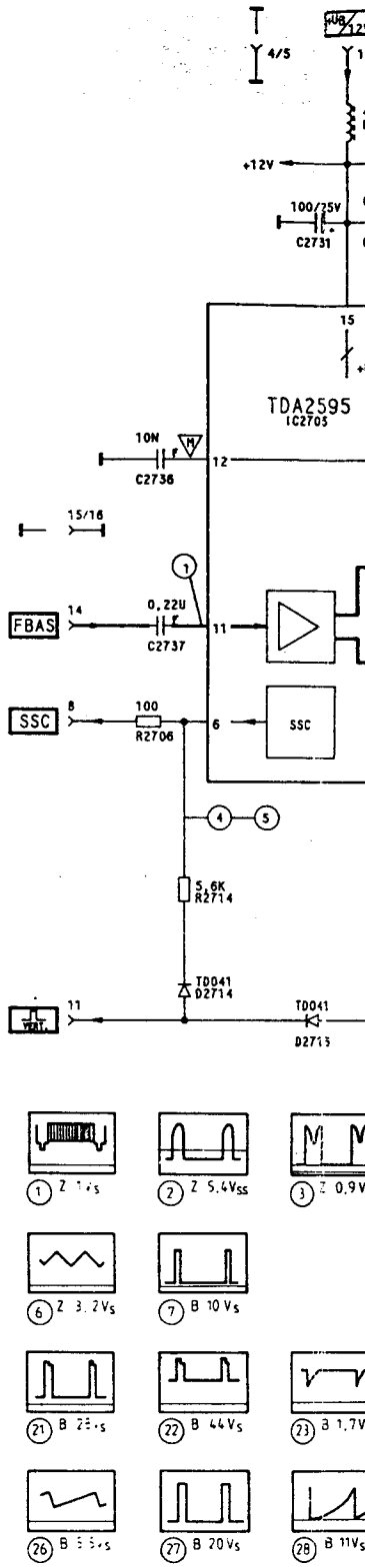

Ablenkung 29504-107.21
Deflection 107.22 Werte in ( )
Deflessione

Kein Anpassungsabgleich bei Austausch der Steckkarte notwendig
When replacing the plug-in board, no alignment is necessary
Non è necessaria nessuna taratura di adattamento dopo la sostituzione di una scheda ad innesto

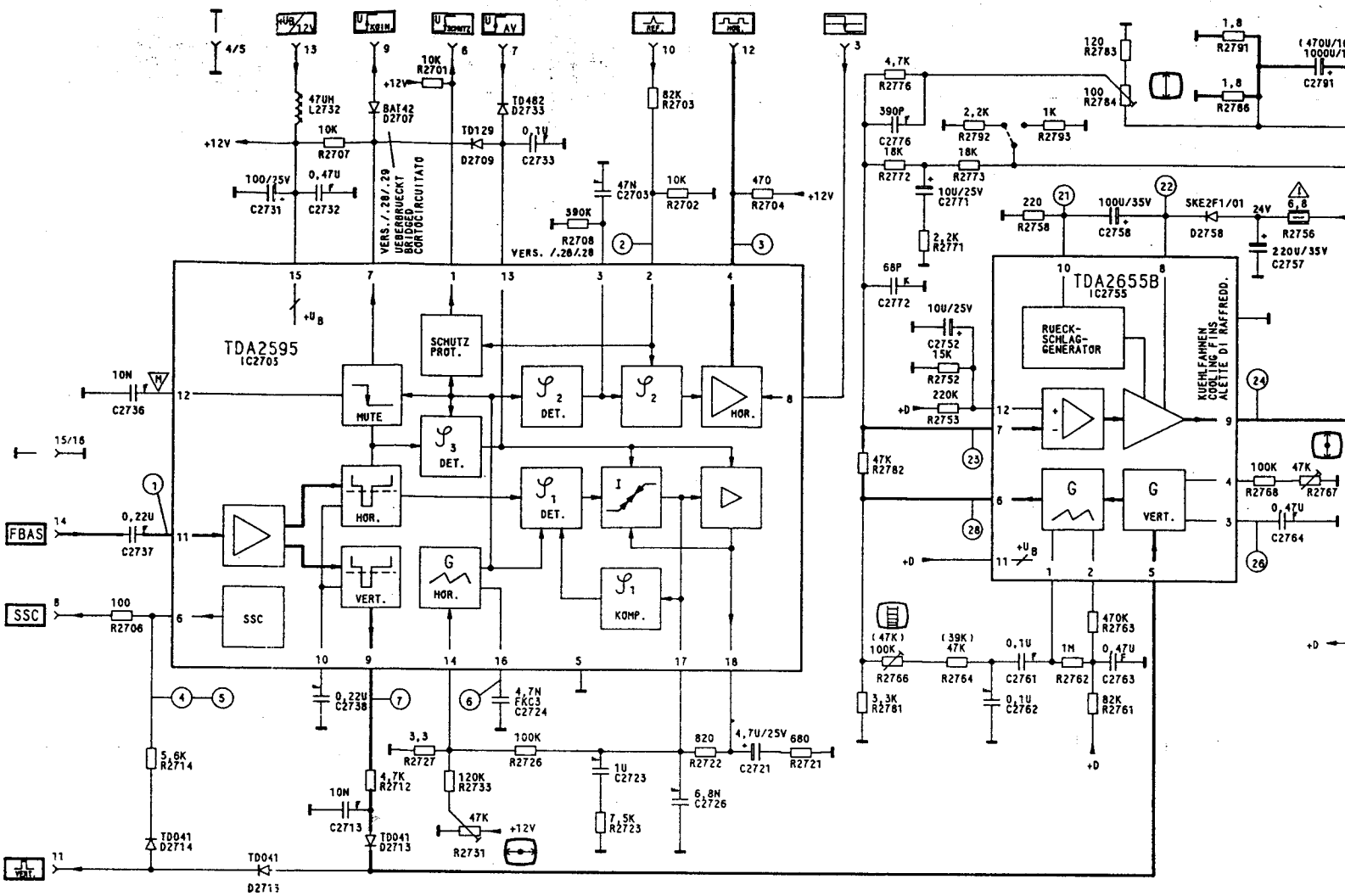

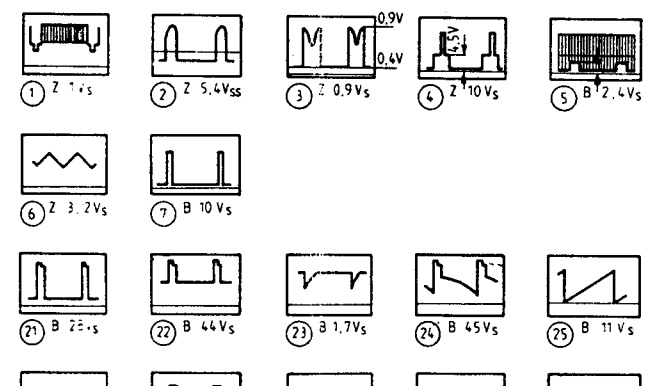

Ablenkung 29504-007.28/.29
Deflection 007.29 Werte in ( )
Deflessione

Kein Anpassungsabgleich bei Austausch der Ste
When replacing the plug-in board, no alignment i
Non è necessaria nessuna taratura di adattamen
sostituzione di una scheda ad innesto

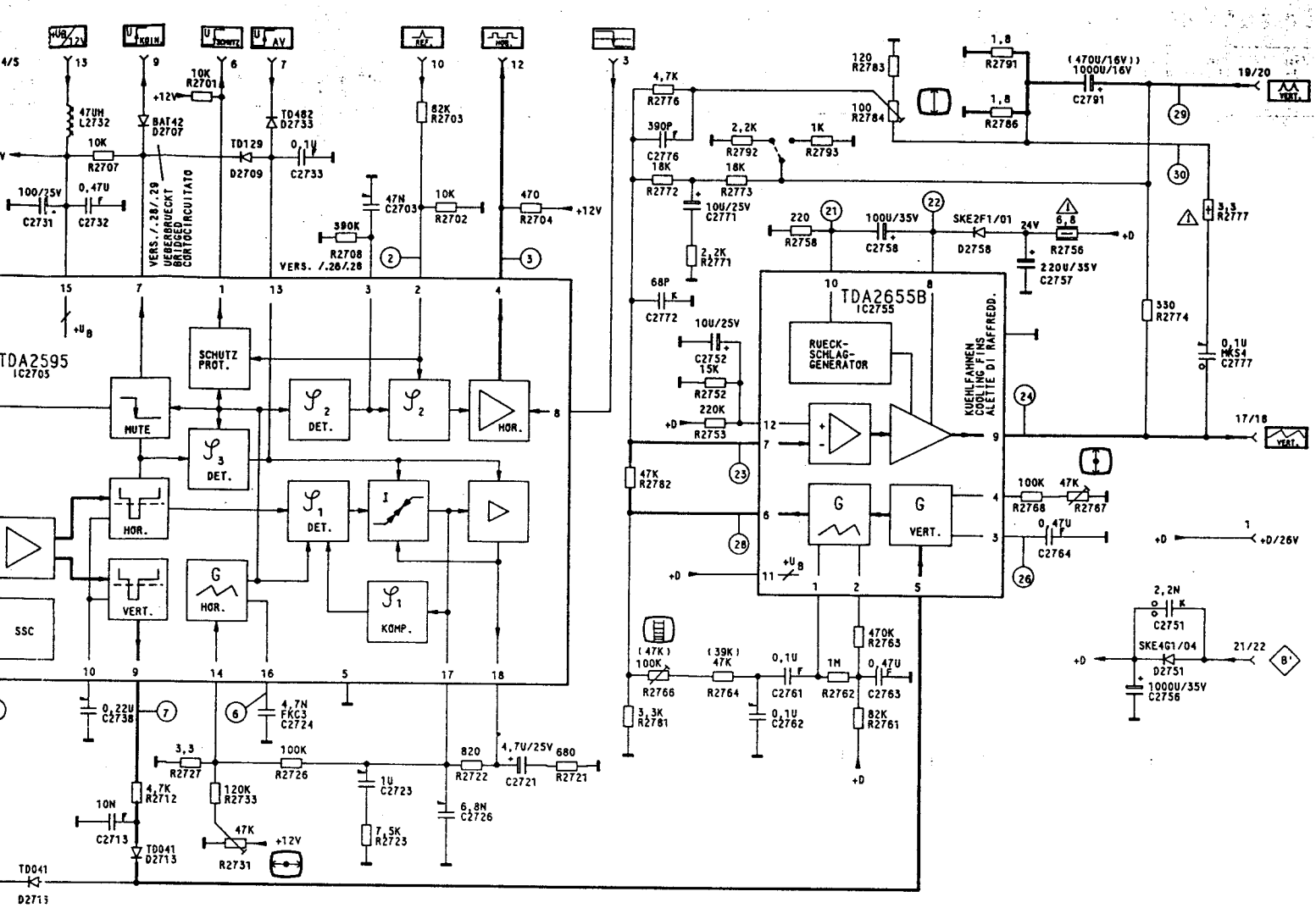

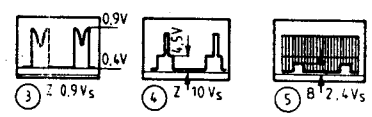

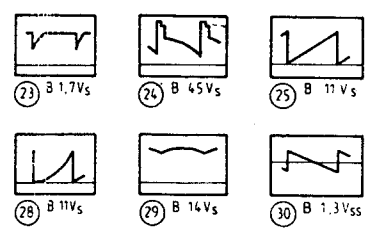

Ablenkung 29504-007.28/.29
Deflection 007.29 Werte in ( )
Deflessione

Kein Anpassungsabgleich bei Austausch der Steckkarte notwendig
When replacing the plug-in board, no alignment is necessary
Non è necessaria nessuna taratura di adattamento dopo la sostituzione di una scheda ad innesto

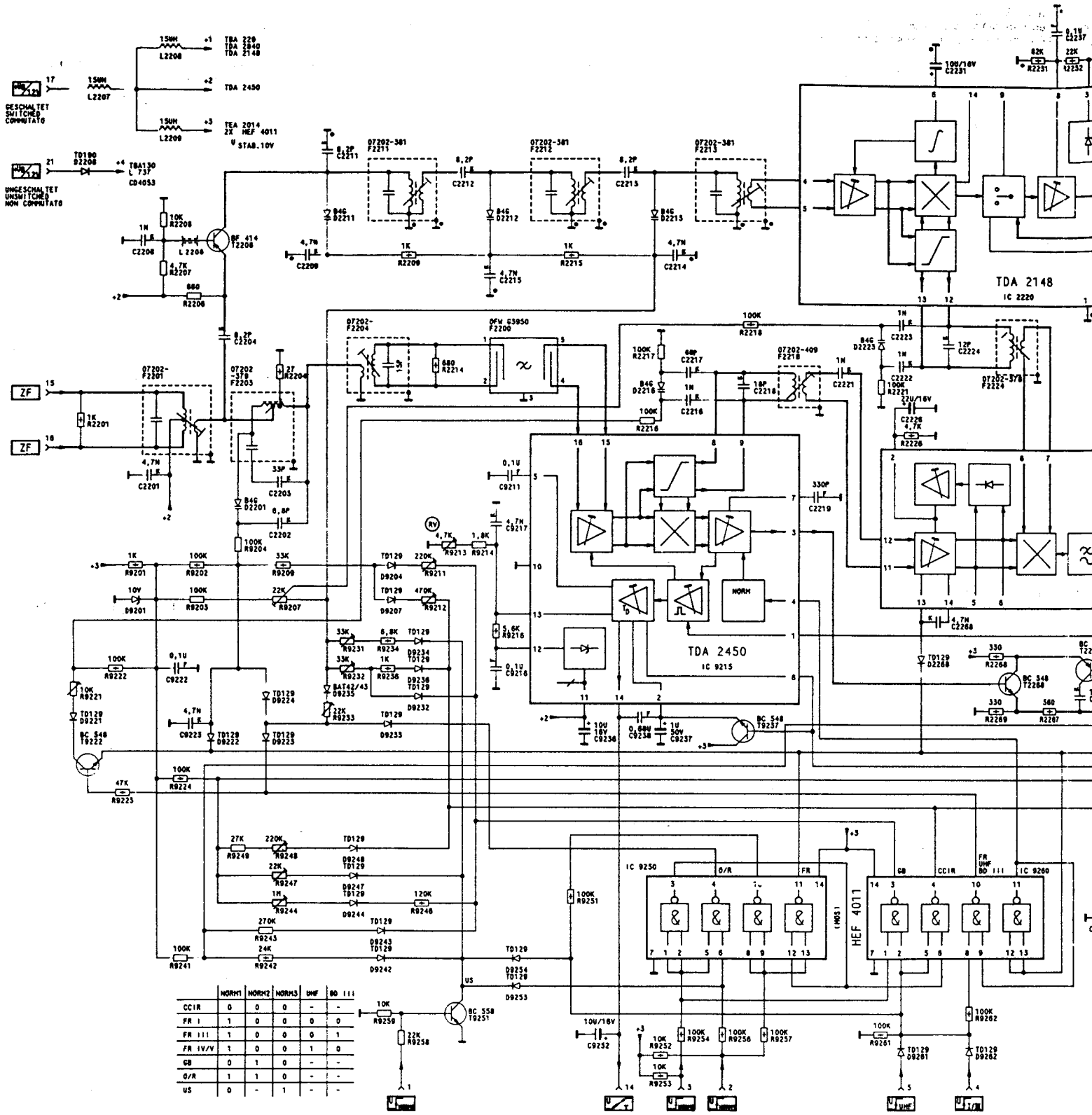

	NORM1	NORM2	NORM3	UHF	BD III
CCIR	0	0	0	-	-
FR I	1	0	0	0	0
FR III	1	0	0	0	1
FR IV/V	1	0	0	1	0
GB	0	1	0	-	-
O/R	1	1	0	-	-
US	0	-	1	-	-

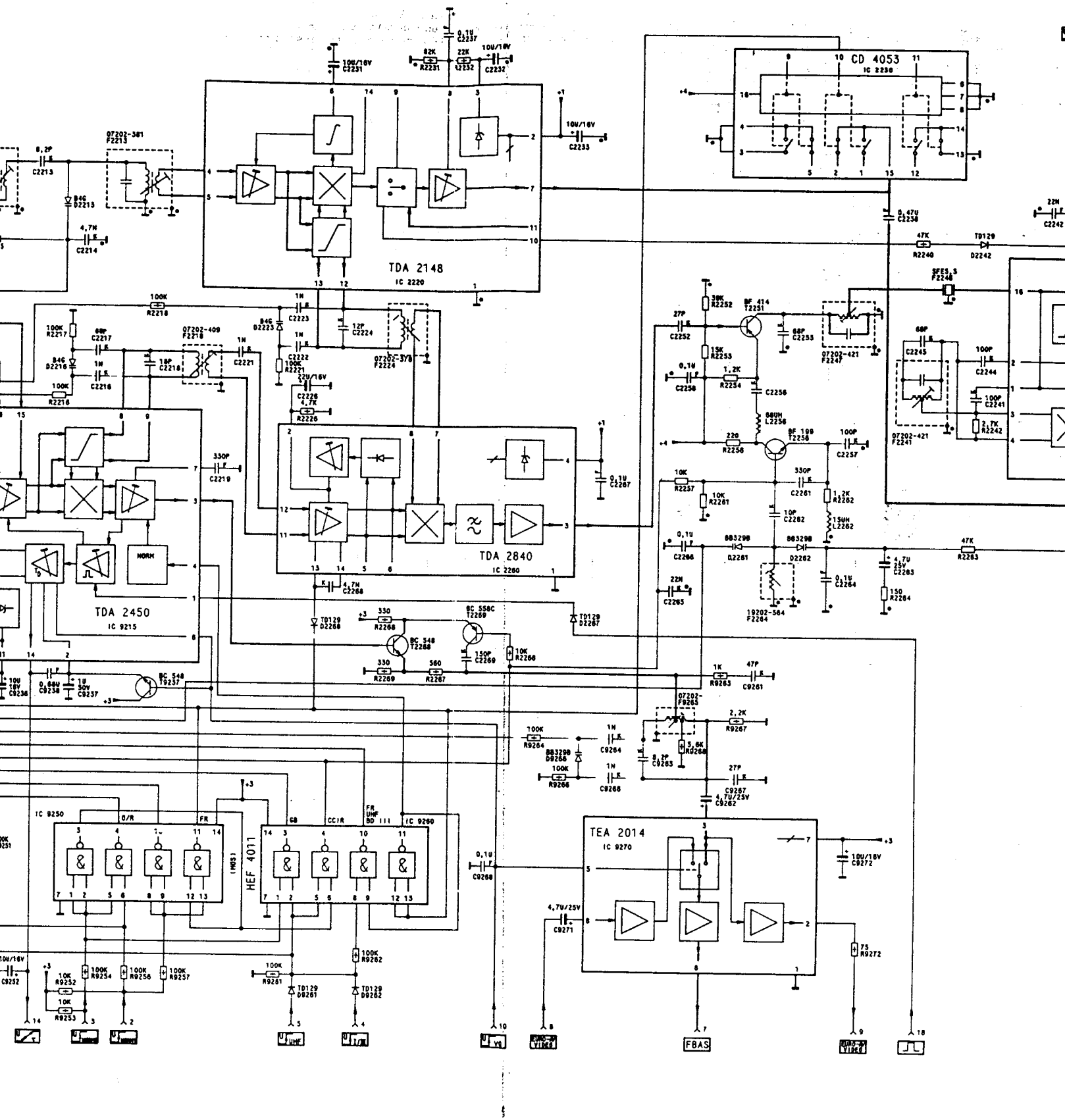

Kein Anpassungsabgleich bei Austausch der Steckkarte notwendig
When replacing the plug-in board, no alignment is necessary
Non è necessaria nessuna taratura di adattamento dopo la sostituzione di una scheda ad innesto

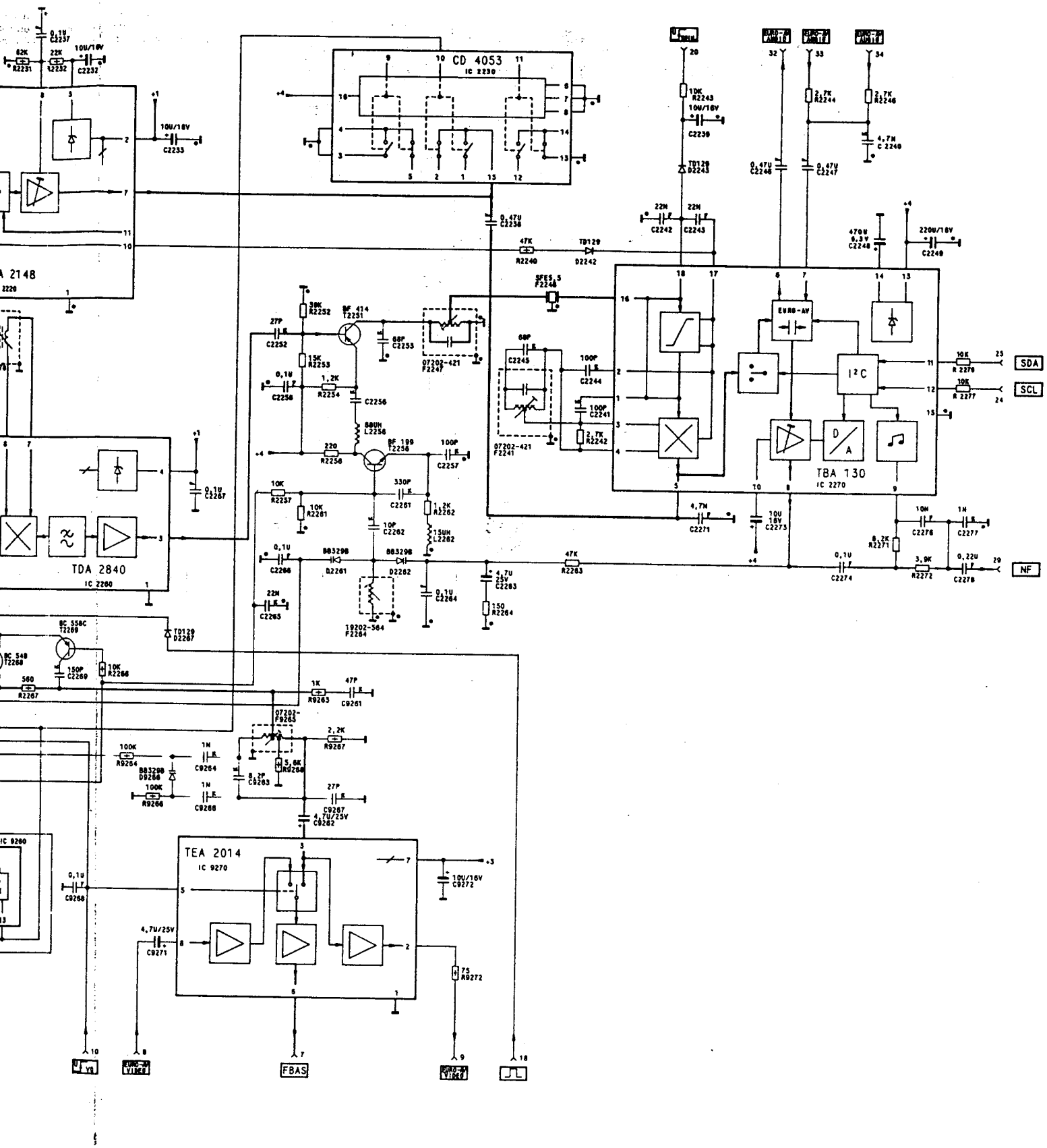

Kein Anpassungsabgleich bei Austausch der Steckkarte notwendig
When replacing the plug-in board, no alignment is necessary
Non è necessaria nessuna taratura di adattamento dopo la sostituzione di una scheda ad innesto

ZF-Verstärker Multi 29504-162.21
IF-Amplifier
Amplificatore FI

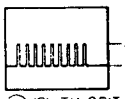

(3) ICL-TV-9BIT CLOCK
100 µsec/cm

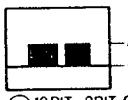

(1) 10BIT-,9BIT CLOCK
(3) 200 µsec/cm

(6) FBAS DC +5V
AC 2,5-3,5 V_{SS}
10 µsec/cm

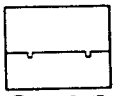

(7) SYNC VT DC +2,5V
AC 0,5 V_{SS}
10 µsec/cm

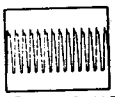

(9) DC +6V/AC 2 V_{SS}
6 MHz
200 nsec/cm

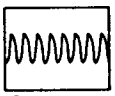

(10) DC +4V/AC 3 V_{SS}
6,9 MHz
100 nsec/cm

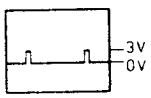

(13) 10 µsec/cm

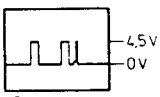

(14) 100 µsec/cm

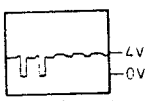

(17) 500 nsec/cm

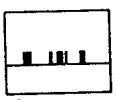

(18) DC +1,2V
AC 0,7 V_{SS} ± 3 dB
5 µsec/cm

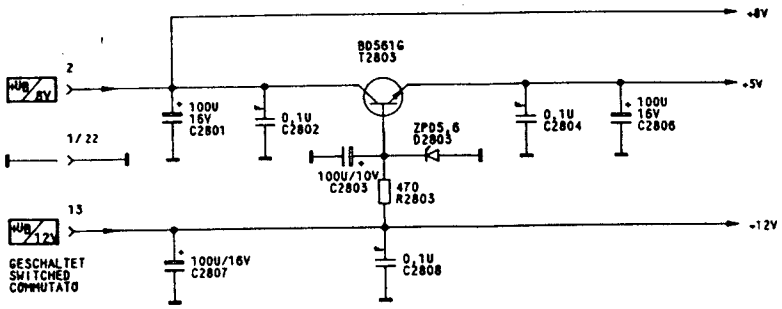

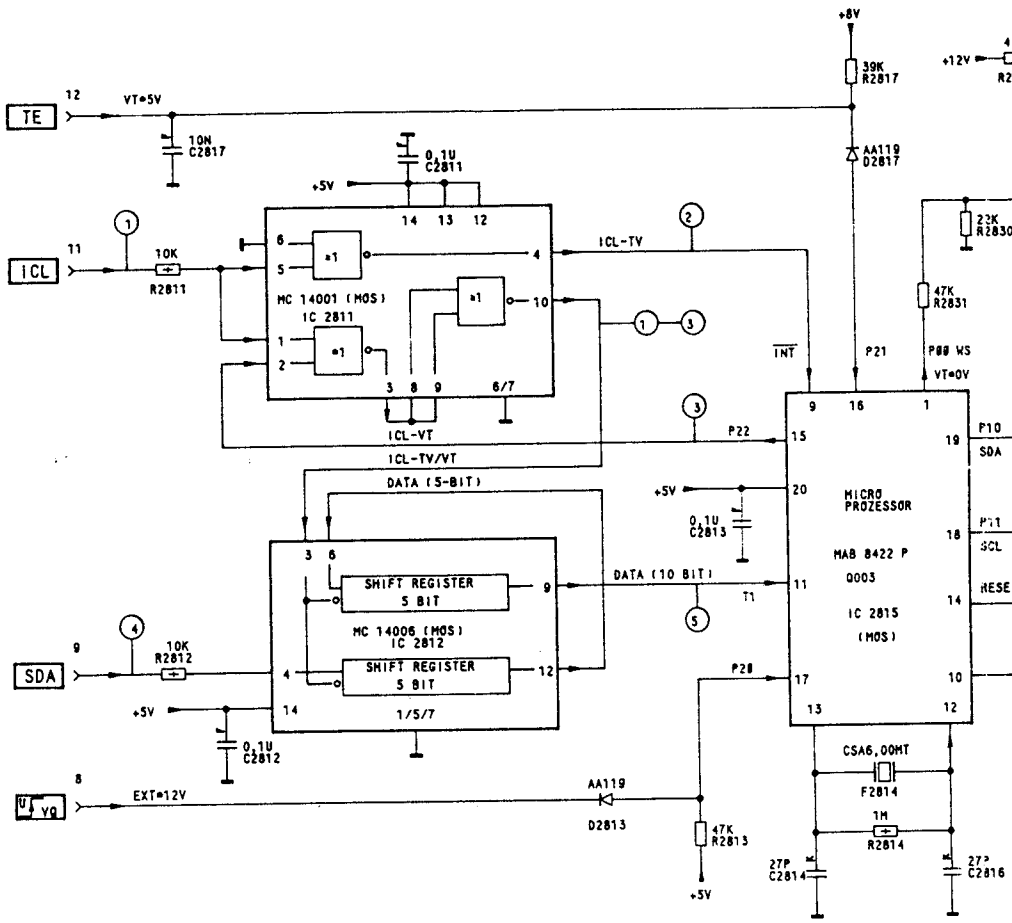

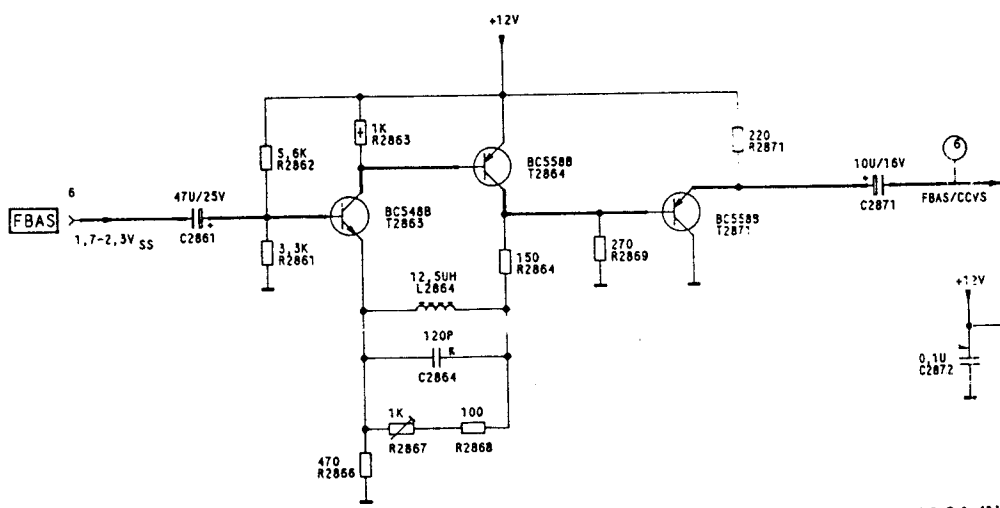

VIDEOTEXT-DECODER 29504-108.01 (N
TELETEXT DECODER -108.11 (S
DECODER TELEVIDEO

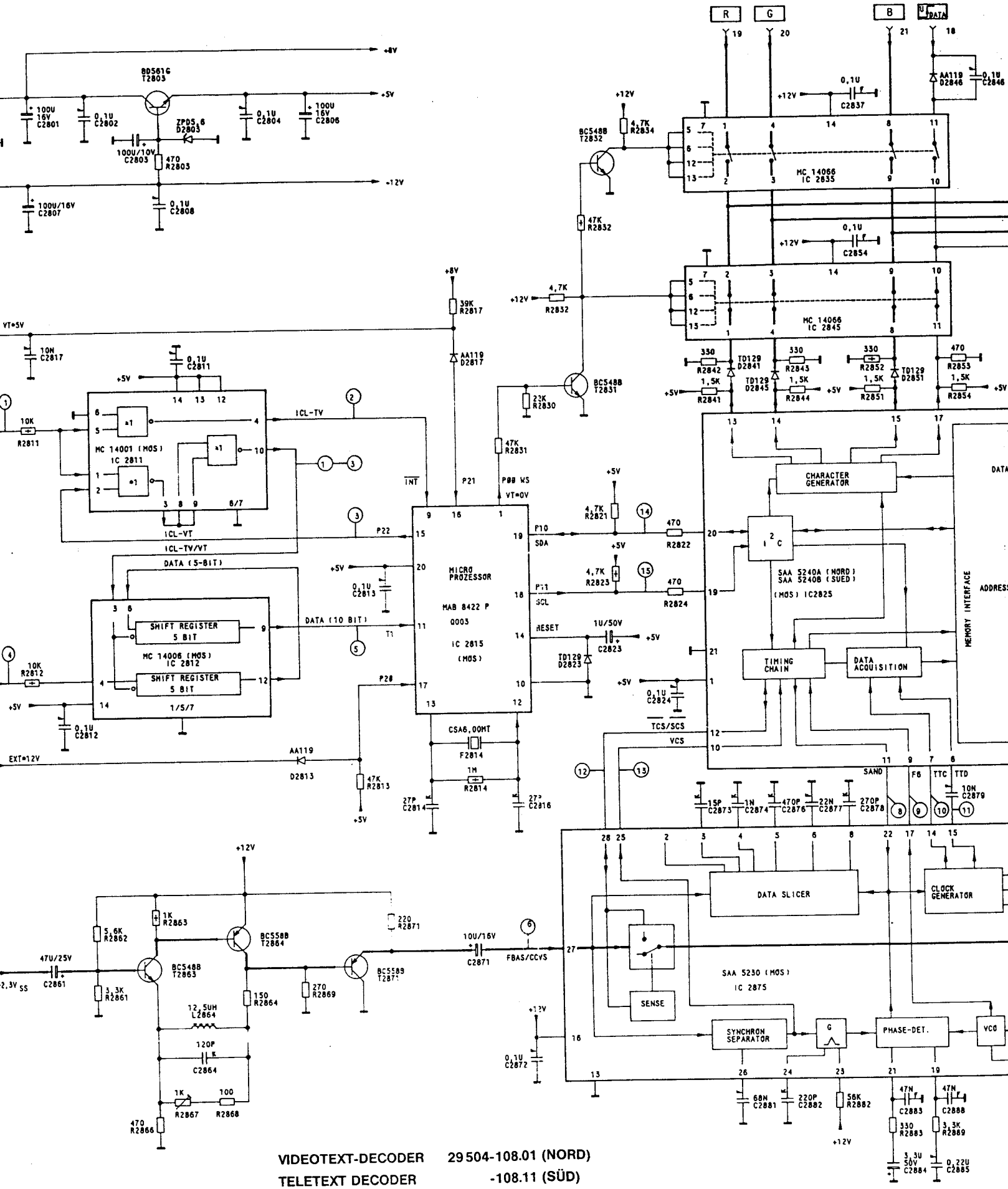

VIDEOTEXT-DECODER 29 504-108.01 (NORD)
TELETEXT DECODER -108.11 (SÜD)
DECODER TELEVIDEO

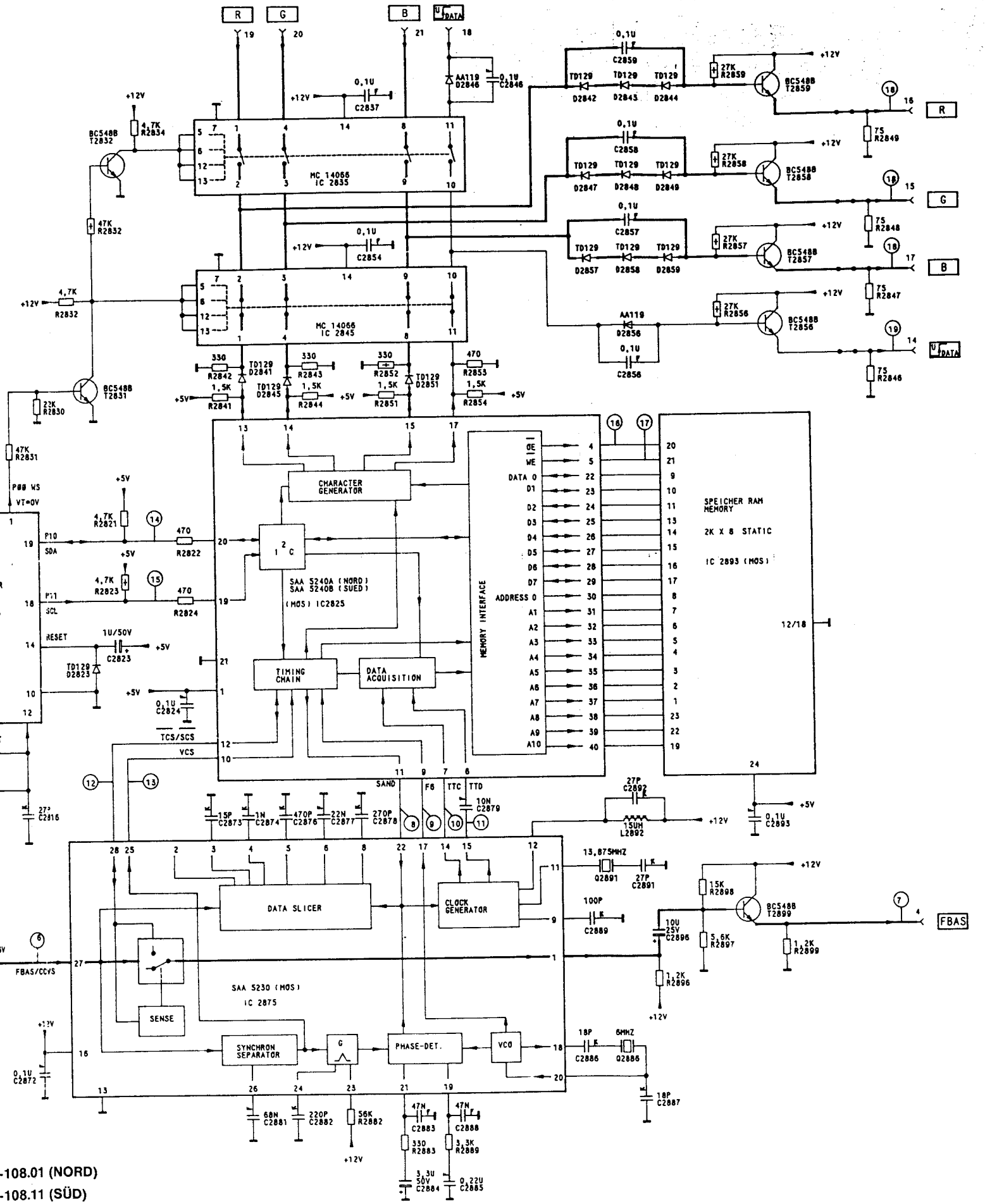

-108.01 (NORD)
-108.11 (SÜD)

satzteilliste (Auszug) · List of Spare-Parts (extract) · Lista ricambi (estratto)

s.	Fig. No.	Bestell-Nr./Part No. Réf./Nr. d'ordinazioni		Benennung	Description
				Steckkarten	**Plug-in circuit boards**
		29504-101.01		Kabeltuner	Cable tuner
		29504-102.21		ZF	IF
der					or:
		29504-102.22		ZF	IF
2		29504-112.21		ZF (GB)	IF (GB)
5		29504-105.01		Farb/RGB	Colour/RGB
oder					or:
5		29504-105.21		Farb/RGB	Colour/RGB
7		29504-107.21		Ablenkung	Deflection
oder					or:
7		29504-107.22		Ablenkung	Deflection
				Mechanische Teile	**Mechanical parts**
11		29304-070.44		Bildrohrplatte kpl.	Tube socket c. board compl.
11.1		29303-751.97		Bildrohrfassung	Tube socket
12		29700-276.01		Bausteinhalter	Circuit board holder
13		29500-808.01		Abdeckung (Koax.-Buchse)	Cover (coax-socket)
14		09621-113.02	2x	Sicherungshalter	Fuse holder
15		29303-153.12	2x	Montageclip f. IC	Mounting clip
16		29303-153.02		Montageclip f. Trans.	Mounting clip
				Elektrische Teile	**Electrical parts**
K 536		8324-800-050		Kaskade BG 2087/ 642-1001 (16")	EHT tripler BG 2087 642-1001 (16")
K 536		8324-800-051		Kaskade BG 2087/ 642-1002 (20")	EHT tripler BG 2087 642-1002 (20")
		72008-090.02		Fokusregler	Focus control
TR 501		09246-836.21			
TR 526		29201-018.02			
TR 651		29500-617.01			
L 336		8140-526-451			
L 337		8140-526-451			
L 355		8140-526-312			
L 356		09240-113.21			
L 502		09238-225.01			
L 503		29500-806.96			
L 514		29500-806.96			
L 521		29203-114.97			
L 526		09240-110.21			
L 573		09246-838.21			
L 573		09246-850.21	2)		
L 631		29500-804.06			
L 633		8140-525-266			
L 634		09278-309.01			
L 672		8140-526-320			
L 708		09647-002.01			
Rel.652		29500-706.97			
IC 350		8305-338-442		TDA 8442 (MOS)	
IC 365		8305-302-241		TDA 1905	
IC 631		8305-302-464		TDA 4600 D	
IC 666		8305-205-765		7812/ 3%	
IC 676		8305-205-701		78 M 05	
T 111		8302-202-543		BC 548 B	
T 321		8302-200-559		BC 558 B	
T 503		8302-260-508		BC 508 D	
T 504		8302-200-637		BC 637	
T 634		8302-260-908		BC 908	
T 736		8302-411-759		GF 759	
T 737		[illegible]		[illegible]	

Pos. No.	Fig. No.	Bestell-Nr./Part No. Réf./Nr. d'ordinazioni	Benennung Description Désignation Denominazione
T 756		8302-411-759	GF 759
T 762		8302-222-422	BF 422
T 766		8302-220-421	BF 421
T 776		8302-411-759	GF 759
T 782		8302-222-422	BF 422
T 786		8302-220-421	BF 421
D 321		8309-214-114	TD 129
D 331		8309-715-008	ZPD 5,6
D 333		8309-201-033	BA 157
D 351		8309-214-003	TD 041
D 352		8309-707-107	ZPD 12
D 504		8309-214-114	TD 129
D 515		8309-214-018	TD 190
D 529		8309-204-268	BY 268
D 531		8309-215-020	1N 4004
D 534		8309-215-020	1N 4004
D 616		8309-215-013	1N 4007
D 621		8308-560-384	SKB 380/C1500/L 5 B
D 633		8309-517-033	BYW 32
D 634		8309-215-013	1N 4007
D 647		8309-517-033	BYW 32
D 648		8309-517-033	BYW 32
D 652		8309-214-114	TD 129
D 656		8309-517-076	BYW 76
D 661		8309-517-072	BYW 72
D 671		8309-517-072	BYW 72
D 708		8309-707-109	ZPD 4,7
D 741		8309-215-050	1N 4148
D 743		8309-215-050	1N 4148
D 746		8309-214-018	TD 190
D 761		8309-215-050	1N 4148
D 763		8309-215-050	1N 4148
D 766		8309-214-018	TD 190
D 781		8309-215-050	1N 4148
D 783		8309-215-050	1N 4148
D 786		8309-214-018	TD 190
C 366		8415-166-147	1000µF/25 V
C 379		8415-166-147	1000µF/25 V
C 504		8563-731-452	0,022µF/630 V
C 511		8515-911-063	5200pF/1500 V
C 511		8515-911-065	5600pF/1500 V 2)
C 511 A		8515-911-047	750pF/1500 V
C 513		8523-631-218	1800pF/400 V
C 514		8515-911-001	150pF/1600 V
C 516		8525-040-830	0,6µF/250 V
C 517		8525-040-830	0,6µF/250 V
C 521		8515-722-231	0,26µF/160 V
C 521		8515-722-220	0,2µF/160 V 2)
C 522		8515-722-231	0,26µF/160 V
C 528		8563-731-610	0,01µF/1250 V
C 529		8650-090-477	270pF/2 KV
C 611		8660-097-241	3300pF/400 V
C 613		8660-097-241	3300pF/400 V
C 621		8650-090-510	1000pF/1 KV
C 622		8650-090-510	1000pF/1 KV
C 623		8650-090-510	1000pF/1 KV
C 624		8650-090-510	1000pF/1 KV
C 626		8443-306-050	150µF/385 V
C 634		8515-911-091	2200pF/2000 V
C 635		8650-090-477	270pF/2 KV
C 644		8525-033-487	8200pF/400 V
C 646		8525-033-487	8200pF/400 V
C 648		8563-731-409	0,047µF/400 V
C 656		8650-090-477	270pF/2 KV
C 657		8451-997-090	100µF/250 V
C 661		8650-090-477	270pF/2 KV
C 671		8650-090-477	270pF/2 KV
C 703		8515-722-467	0,022µF/400 V
C 722		8563-731-655	0,15µF/1000 V
C 727		8650-131-012	150pF/2 KV

Pos. No.	Fig. No.	Bestell-Nr./Part No. Réf./Nr. d'ordinazioni
R 337		8705-269-301
R 366		8700-229-017
R 367		8700-001-140
R 378		8700-000-001
R 501		8705-269-249
R 502		8705-328-993
R 504		8705-329-261
R 513		8703-441-05[illegible]
R 523		8705-221-271
R 524		8700-119-017
R 525		8735-003-033
R 526		8311-201-073
R 527		8730-179-229
R 528		8705-221-225
R 529		8705-221-321
R 533		8700-000-073
R 573		8705-269-271
R 573		8730-149-277
R 616		8705-321-083
R 617		8311-201-46[illegible]
R 621		8730-199-0[illegible]
R 623		8311-400-125
R 624		8718-250-155
R 626		8705-369-325
R 627		8718-250-014
R 646		8700-161-131
R 647		8796-101-142
R 648		8750-210-049
R 656		8705-329-315
R 661		8735-003-022
R 671		8735-003-022
R 704		8705-227-013
R 721		8700-051-071
R 724		8797-300-172
R 731		8790-047-135
R 734		8705-329-113
R 741		8705-369-103
R 742		8700-201-069
R 751		8790-047-135
R 754		8705-329-113
R 761		8705-369-103
R 762		8700-201-069
R 771		8790-047-135
R 774		8705-329-113
R 781		8705-369-103
R 782		8700-201-069
Si 644		8315-617-004

2) = Vers. B
Geräte mit rechte

· Lista ricambi (estratto)

Pos. No.	Fig. No.	Bestell-Nr./Part No. Réf./Nr. d'ordinazioni	Benennung Description Désignation Denominazione
T 756		8302-411-759	GF 759
T 762		8302-222-422	BF 422
T 766		8302-220-421	BF 421
T 776		8302-411-759	GF 759
T 782		8302-222-422	BF 422
T 786		8302-220-421	BF 421
D 321		8309-214-114	TD 129
D 331		8309-715-008	ZPD 5,6
D 333		8309-201-033	BA 157
D 351		8309-214-003	TD 041
D 352		8309-707-107	ZPD 12
D 504		8309-214-114	TD 129
D 515		8309-214-018	TD 190
D 529		8309-204-268	BY 268
D 531		8309-215-020	1N 4004
D 534		8309-215-020	1N 4004
D 616		8309-215-013	1N 4007
D 621		8308-560-384	SKB 380/C1500/L 5 B
D 633		8309-517-033	BYW 32
D 634		8309-215-013	1N 4007
D 647		8309-517-033	BYW 32
D 648		8309-517-033	BYW 32
D 652		8309-214-114	TD 129
D 656		8309-517-076	BYW 76
D 661		8309-517-072	BYW 72
D 671		8309-517-072	BYW 72
D 708		8309-707-109	ZPD 4,7
D 741		8309-215-050	1N 4148
D 743		8309-215-050	1N 4148
D 746		8309-214-018	TD 190
D 761		8309-215-050	1N 4148
D 763		8309-215-050	1N 4148
D 766		8309-214-018	TD 190
D 781		8309-215-050	1N 4148
D 783		8309-215-050	1N 4148
D 786		8309-214-018	TD 190
C 366		8415-166-147	1000µF/25 V
C 379		8415-166-147	1000µF/25 V
C 504		8563-731-452	0,022µF/630 V
C 511		8515-911-063	5200pF/1500 V
C 511		8515-911-065	5600pF/1500 V 2)
C 511 A		8515-911-047	750pF/1500 V
C 513		8523-631-218	1800pF/400 V
C 514		8515-911-001	150pF/1600 V
C 516		8525-040-830	0,6µF/250 V
C 517		8525-040-830	0,6µF/250 V
C 521		8515-722-231	0,26µF/160 V
C 521		8515-722-220	0,2µF/160 V 2)
C 522		8515-722-231	0,26µF/160 V
C 528		8563-731-610	0,01µF/1250 V
C 529		8650-090-477	270pF/2 KV
C 611		8660-097-241	3300pF/400 V
C 613		8660-097-241	3300pF/400 V
C 621		8650-090-510	1000pF/1 KV
C 622		8650-090-510	1000pF/1 KV
C 623		8650-090-510	1000pF/1 KV
C 624		8650-090-510	1000pF/1 KV
C 626		8443-306-050	150µF/385 V
C 634		8515-911-091	2200pF/2000 V
C 635		8650-090-477	270pF/2 KV
C 644		8525-033-487	8200pF/400 V
C 646		8525-033-487	8200pF/400 V
C 648		8563-731-409	0,047µF/400 V
C 656		8650-090-477	270pF/2 KV
C 657		8451-997-090	100µF/250 V
C 661		8650-090-477	270pF/2 KV
C 671		8650-090-477	270pF/2 KV
C 703		8515-722-467	0,022µF/400 V
C 722		8563-731-655	0,15µF/1000 V
C 727		8650-131-012	150pF/2 KV

Pos. No.	Fig. No.	Bestell-Nr./Part No. Réf./Nr. d'ordinazioni	Benennung Description Désignation Denominazione
R 337		8705-269-301	15 KΩ
R 366		8700-229-017	4,7 Ω NB
R 367		8700-001-140	2,2 Ω
R 378		8700-000-001	1 Ω
R 501		8705-269-249	100 Ω
R 502		8705-328-993	0,51 Ω
R 504		8705-329-261	330 Ω
R 513		8703-441-095	8,2 KΩ NB
R 523		8705-221-271	820 Ω
R 524		8700-119-017	4,7 Ω
R 525		8735-003-033	0,33 Ω
R 526		8311-201-073	PTC 2 G/P 2390-J 146
R 527		8730-179-229	7W/15 Ω
R 528		8705-221-225	10 Ω
R 529		8705-221-321	100 KΩ
R 533		8700-000-073	1 KΩ
R 573		8705-269-271	820 Ω
R 573		8730-149-277	4W/1,5 KΩ 2)
R 616		8705-321-083	2,7 KΩ
R 617		8311-201-462	PTC 1 G/Q 63100-P 2462-J 29
R 621		8730-199-0[illegible]	11 W/4,3 Ω
R 623		8311-400-125	VDR VZA 275
R 624		8718-250-153	3,6 MΩ VDE
R 626		8705-369-325	150 KΩ
R 627		8718-250-014	4,7 MΩ VDE
R 646		8700-161-131	270 KΩ
R 647		8796-101-142	2,5 KΩ
R 648		8750-210-049	7W/100 Ω
R 656		8705-329-315	56 KΩ
R 661		8735-003-022	0,22 Ω
R 671		8735-003-022	0,22 Ω
R 704		8705-227-013	3,3 Ω
R 721		8700-051-071	82 KΩ
R 724		8797-300-172	470 KΩ
R 731		8790-047-135	1 KΩ
R 734		8705-329-113	47 KΩ
R 741		8705-369-103	18 KΩ
R 742		8700-201-069	680 Ω NB
R 751		8790-047-135	1 KΩ
R 754		8705-329-113	47 KΩ
R 761		8705-369-103	18 KΩ
R 762		8700-201-069	680 Ω NB
R 771		8790-047-135	1 KΩ
R 774		8705-329-113	47 KΩ
R 781		8705-369-103	18 KΩ
R 782		8700-201-069	680 Ω NB
Si 644		8315-617-004	1 A

2) = Vers. B
Geräte mit rechteck Bildröhre / used by flat square tube

Symbole und ihre Bedeutung
Symbols and their meaning
Simboli e loro significati

P	PROGR.
P1	PROGR. TASTE PROGR. BUTTON TASTO PROGR. TOUCHE PROGR.
MEMO	SPEICHERTASTE MEMORY BUTTON TASTO DI MEMORIA TOUCHE MEMOIRE
NORM	NORMTASTE TV STANDARD SELECT. BUTTON COMMUT. DI NORMA TOUCHE DE NORME
▷▷+	FEINABST. + FINE TUNING + SINT. FINE + REGLAGE FIN +
-◁◁	FEINABST.- FINE TUNING - SINT. FINE - REGLAGE FIN -
I	SUCHLAUF BD I SELF-SEEK BAND I SINT. AUTOM. BANDA I RECHERCHE AUTOM. BANDE I
III	SUCHLAUF BANDWAHL III SELF-SEEK BAND III SINT. AUTOM. BANDA III RECHERCHE AUTOM. BANDE III
UHF	SUCHLAUF UHF SELF-SEEK UHF SINT. AUTOM. UHF RECHERCHE AUTOM. UHF
	LAUTSTAERKE VOLUME VOLUME SONORE
FT	FEINABST. FINE TUNING SINT. FINE REGLAGE FIN
KA	KANALWAHL CHANNEL SEL. SELEZ. CANALE SELECT. DE CANAUX
	BALANCE BILANCIAM. BALANCE
	SUCHLAUF SELF-SEEK SINT. AUTOM. RECHERCHE AUTOM.
U I/III	SCHALTSP. BANDWAHL BAND SEL. SWITCHING VOLTAGE TENS. DI COMMUT. SELEZ. BANDA TENS. DE COMMUT. SELECT. BANDE
U VHF	SCHALTSP. VHF SWITCHING VOLT. VHF TENS. DI COMMUT. VHF TENS. DE COMMUT. VHF
U UHF	SCHALTSP. UHF SWITCHING VOLT. UHF TENS. DI COMMUT. UHF TENS. DE COMMUT. UHF
U AFC	SCHALTSP. AFC SWITCHING VOLT. AFC TENS. DI COMMUT. AFC TENS. DE COMMUT. AFC
U AV	SCHALTSP. AV AV SWITCHING VOLT. TENS. DI COMMUT. AV TENS. DE COMMUT. AV
U NORM	SCHALTSP. NORM SWITCHING VOLT. STANDARD TENS. DI COMMUT. NORMA TENS. DE COMMUT. STANDARD
U KOINC.	SCHALTSP. KOINZ. SWITCHING VOLT. COINC. TENS. DI COMMUT. COINC. TENS. DE COMMUT. COINC.
U EURO-AV	SCHALTSP. EURO-AV SWITCHING VOLT. EURO-AV TENS. DI COMMUT. EURO-AV TENS. DE COMMUT.
U VQ	SCHALTSP. VIDEO QUELLE SWITCHING VOLT. VIDEO SOURCE TENS. DI COMMUT. SORG. VIDEO TENS. DE COMMUT. SOURCE VIDEO
U DATA	SCHALTSP. DATENBETR. SWITCHING VOLT. DATA MODE TENS. DI COMMUT. DATI TENS. DE COMMUT. FONCT. DONNEES
U 4,5MHZ	SCHALTSP. 4,5 MHZ SWITCHING VOLT. 4,5 MHZ TENS. DI COMMUT. 4,5 MHZ TENS. DE COMMUT. 4,5 MHZ
U τ	REGELSP. VERZOEGERT DELAYED CONTR. VOLTAGE TENS. DI CONTR. RITARD. TENS. DE REGUL. RETARDEE
U TUN.	ABSTIMMSP. TUNER TUNING VOLT. TUNER TENS. DI SINTONIA TUNER TENS. D'ACCORD TUNER
U AFC	REGELSP. AFC AFC CONTROL VOLT. TENS. DI CONTR. AFC TENS. DE REGUL. AFC
MUTE	STUMMSCHALTUNG MUTING SILENZIAMENTO SILENCIEUX
	TASTIMPULS GATING PULSE IMPULSO A CADENZA IMPULS. DE DECLENCHEMENT

...teil-Nr./Part No. ...Nr. d'ordinazioni	Benennung Description Désignation Denominazione
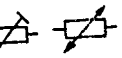	
...05-269-301	15 KΩ
...00-229-017	4,7 Ω NB
...00-001-140	2,2 Ω
...00-000-001	1 Ω
...05-269-249	100 Ω
...05-328-993	0,51 Ω
...05-329-261	330 Ω
...03-441-095	8,2 KΩ NB
...05-221-271	820 Ω
...00-119-017	4,7 Ω
...35-003-033	0,33 Ω
...311-201-073	PTC 2 G/P 2390-J 146
...730-179-229	7W/15 Ω
...705-221-225	10 Ω
...705-221-321	100 KΩ
...700-000-073	1 KΩ
8705-269-271	820 Ω
8730-149-277	4W/1,5 KΩ 2)
8705-321-083	2,7 KΩ
8311-201-462	PTC 1 G/Q 63100-P 2462-J 29
8730-199-01..	11 W/4,3 Ω
8311-400-125	VDR VZA 275
8718-250-159	3,6 MΩ VDE
8705-369-325	150 KΩ
8718-250-014	4,7 MΩ VDE
8700-161-131	270 KΩ
8796-101-142	2,5 KΩ
8750-210-049	7W/100 Ω
8705-329-315	56 KΩ
8735-003-022	0,22 Ω
8735-003-022	0,22 Ω
8705-227-013	3,3 Ω
8700-051-071	82 KΩ
8797-300-172	470 KΩ
8790-047-135	1 KΩ
8705-329-113	47 KΩ
8705-369-103	18 KΩ
8700-201-069	680 Ω NB
8790-047-135	1 KΩ
8705-329-113	47 KΩ
8705-369-103	18 KΩ
8700-201-069	680 Ω NB
8790-047-135	1 KΩ
8705-329-113	47 KΩ
8705-369-103	18 KΩ
8700-201-069	680 Ω NB
8315-617-004	1 A

...s. B
...äte mit rechteck Bildröhre / used by flat square tube

Symbole und ihre Bedeutung
Symbols and their meaning
Simboli e loro significati

Symbol	Bedeutung / Meaning / Significato
P	PROGR.
P1	PROGR. TASTE / PROGR. BUTTON / TASTO PROGR. / TOUCHE PROGR.
MEMO	SPEICHERTASTE / MEMORY BUTTON / TASTO DI MEMORIA / TOUCHE MEMOIRE
NORM	NORMTASTE / TV STANDARD SELECT. BUTTON / COMMUT. DI NORMA / TOUCHE DE NORME
▷▷+	FEINABST. + / FINE TUNING + / SINT. FINE + / REGLAGE FIN +
-◁◁	FEINABST.- / FINE TUNING - / SINT. FINE - / REGLAGE FIN -
I	SUCHLAUF BD I / SELF-SEEK BAND I / SINT. AUTOM. BANDA I / RECHERCHE AUTOM. BANDE I
III	SUCHLAUF BANDWAHL III / SELF-SEEK BAND III / SINT. AUTOM. BANDA III / RECHERCHE AUTOM. BANDE III
UHF	SUCHLAUF UHF / SELF-SEEK UHF / SINT. AUTOM. UHF / RECHERCHE AUTOM. UHF
	LAUTSTAERKE / VOLUME / VOLUME SONORE
FT	FEINABST. / FINE TUNING / SINT. FINE / REGLAGE FIN
KA	KANALWAHL / CHANNEL SEL. / SELEZ. CANALE / SELECT. DE CANAUX
	BALANCE / BILANCIAM. / BALANCE
	SUCHLAUF / SELF-SEEK / SINT. AUTOM. / RECHERCHE AUTOM.
U I/III	SCHALTSP. BANDWAHL / BAND SEL. SWITCHING VOLTAGE / TENS. DI COMMUT. SELEZ. BANDA / TENS. DE COMMUT. SELECT. BANDE
U VHF	SCHALTSP. VHF / SWITCHING VOLT. VHF / TENS. DI COMMUT. VHF / TENS. DE COMMUT. VHF
U UHF	SCHALTSP. UHF / SWITCHING VOLT. UHF / TENS. DI COMMUT. UHF / TENS. DE COMMUT. UHF
U AFC	SCHALTSP. AFC / SWITCHING VOLT. AFC / TENS. DI COMMUT. AFC / TENS. DE COMMUT. AFC
U AV	SCHALTSP. AV / AV SWITCHING VOLT. / TENS. DI COMMUT. AV / TENS. DE COMMUT. AV
U NORM	SCHALTSP. NORM / SWITCHING VOLT. STANDARD / TENS. DI COMMUT. NORMA / TENS. DE COMMUT. STANDARD
U KOIN.	SCHALTSP. KOINZ. / SWITCHING VOLT. COINC. / TENS. DI COMMUT. COINC. / TENS. DE COMMUT. COINC.
U EURO-AV	SCHALTSP. EURO-AV / SWITCHING VOLT. EURO-AV / TENS. DI COMMUT. EURO-AV / TENS. DE COMMUT.
U VQ	SCHALTSP. VIDEO QUELLE / SWITCHING VOLT. VIDEO SOURCE / TENS. DI COMMUT. SORG. VIDEO / TENS. DE COMMUT. SOURCE VIDEO
U DATA	SCHALTSP. DATENBETR. / SWITCHING VOLT. DATA MODE / TENS. DI COMMUT. DATI / TENS. DE COMMUT. FONCT. DONNEES
U 4,5MHZ	SCHALTSP. 4,5 MHZ / SWITCHING VOLT. 4,5 MHZ / TENS. DI COMMUT. 4,5 MHZ / TENS. DE COMMUT. 4,5 MHZ
U τ	REGELSP. VERZOEGERT / DELAYED CONTR. VOLTAGE / TENS. DI CONTR. RITARD. / TENS. DE REGUL. RETARDEE
U TUN	ABSTIMMSP. TUNER / TUNING VOLT. TUNER / TENS. DI SINTONIA TUNER / TENS. D'ACCORD TUNER
U AFC	REGELSP. AFC / AFC CONTROL VOLT. / TENS. DI CONTR. AFC / TENS. DE REGUL. AFC
MUTE	STUMMSCHALTUNG / MUTING / SILENZIAMENTO / SILENCIEUX
	TASTIMPULS / GATING PULSE / IMPULSO A CADENZA / IMPULS. DE DECLENCHEMENT
VERT.	VERT. TASTIMPULS / VERT. GATING PULSE / IMP. A CADENZA VERT. / IMP. TRAME
VERT.	VERT. PARABEL / VERT. PARABOLA / PARABOLA VERT. / SIGNAL PARABOLIQUE
VERT.	VERT. SAEGEZAHN / VERT. SAW TOOTH / DENTE DI SEGA VERT. / SIGNAL DENT DE SCIE
HOR.	HOR. ANSTEUERUNG / HORIZ. DRIVE / PILOTAGGIO ORIZZ. / SYNCHR. LIGNES
REF.	REF. IMPULS / REFERENCE PULSE / IMP. DI RIFER. / IMP. DE REFER.
	SCHUTZSCHALTUNG / CIRCUIT PROTECTION / CIRCUITO DI PROTEZIONE / CIRCUIT DE SECURITE
	FARBTON / TINT / TINTA / TEINTE
REF.	REF. LAUTSTAERKE / VOLUME REF. VOLT. / TENS. DI RIF. VOLUME / TENS. DE REF. VOL. SONORE
	HELLIGKEIT / BRIGHTNESS / LUMINOSITA' / LUMINOSITE
	KONTRAST / CONTRAST / CONTRASTO / CONTRASTE
	FARBKONTRAST / CONTRAST COLOUR / CONTRASTO COLORE / CONTRASTE COULEUR
FBAS	FBAS-SIGNAL / CCVS SIGNAL / SEGNALE SVCC / SIGNAL VIDEO COMPOSITE
SSC	SUPERSANDCASTLE
SB	STRAHLSTR. BEGR. / BEAM CURRENT LIM. / CORRENTE CATODICA MEDIA / LIM. COUR. DE FAISCEAU
SSB	SPITZ. STRAHLSTR. BEGR. / PEAK BEAM CURRENT LIMITING / CORR. CATODICA DI PICCO / LIM. DE FAISCEAU CRETE
R	ROT-SIGNAL / RED SIGNAL / SEGNALE ROSSO / SIGNAL ROUGE
G	GRUEN-SIGNAL / GREEN SIGNAL / SEGNALE VERDE / SIGNAL VERT
B	BLAU-SIGNAL / BLUE SIGNAL / SEGNALE BLU / SIGNAL BLEU
Y	Y-SIGNAL / SEGNALE Y / SIGNAL Y
F	F-SIGNAL / CHROMA SIGNAL / SEGNALE F / SIGNAL CHROMA
SW	SCHWARZWERT / BLACK LEVEL / LIVELLO DEL NERO / NIVEAU DU NOIR
NF	NF-SIGNAL / AF SIGNAL / SEGNALE BF / SIGNAL BF
NF-L	NF-SIGNAL LINKS / AF SIGNAL LEFT / SEGNALE BF SINISTRA / SIGNAL BF GAUCHE
NF-R	NF-SIGNAL RECHTS / AF SIGNAL RIGHT / SEGNALE BF DESTRA / SIGNAL BF DROIT
EURO-AV VIDEO	VIDEO SIGNAL EURO-AV / SEGNALE VIDEO EURO-AV / SIGNAL VIDEO NORME FR
EURO-AV AUDIO	AUDIO SIGNAL EURO-AV / SEGNALE AUDIO EURO-AV / SIGNAL AUDIO NORME FR
U LED	SCHALTSP. LED / LED SWITCHING VOLT. / LED TENS. DI COMMUT. / TENS. DE COMMUT. LED
IR	IR-SIGNAL / SEGNALE IR / SIGNAL IR
U G1	SPG. GITTER 1 / VOLTAGE GRID 1 / TENS. GRIGLIA 1 / TENS. GRILLE G1
U FOC.	FOKUSSP. / FOCUSSING VOLTAGE / TENS. DI FOCALIZZ. / TENS. DE FOCALIS.
U H	HOCHSPANNUNG / EHT VOLTAGE / ALTA TENS. / HAUTE TENS.
U SG	SCHIRMGITTERSP. / SCREEN-GRID VOLT. / TENS. GRIGLIA SCHERMO / TENS. GRILLE-ECRAN
TE	TEXT ENABLE
SCL	I^2 C-CLOCK
VCL	VCR-CLOCK
ICL	I-BUS-CLOCK
SDA	DATEN / DATA / DATI / DONNEES
ZF	ZF-SIGNAL / IF SIGNAL / SEGNALE FI / SIGNAL FI
PP	PAL PRIORITAET / PAL PRIORITY / PRIORITA' PAL / PRIORITE PAL
F-DIR.	F-SIGNAL DIREKT / F SIGNAL DIRECT / SEGNALE F DIRETTO / SIGNAL CHROMA DIRECT
F V	FV-SIGNAL / FV SIGNAL / SEGNALE FV / SIGNAL FY
F U	FU-SIGNAL / FU SIGNAL / SEGNALE FU / SIGNAL FX
F-VERZ	F-SIGNAL VERZOEGERT / F SIGNAL DELAYED / SEGNALE F RITARD. / SIGNAL CHROMA RETARDE
DL	VERZOEGERUNGSLEITUNG / DELAY LINE / LINEA DI RITARDO / LIGNE A RETERD
U SCHUTZ	SCHALTSP./SCHUTZFUNKTION / SWITCHING VOLT. /PROTECTIVE FUNCTION / TENS. DI COMMUT. /FUNZ.DI PROTEZ. / TENS. DE COMMUT. / SECURITE

Symbol	Bedeutung / Meaning / Significato
	ZEIL... / LINE... / LARG... / AMPL...
	OST... / EAST... / AMPI... / AMPL...
	HOR.... / HORI... / LINE... / LINE...
	BILS... / HOR... / POS... / CAD...
	FOK... / FOC... / REG... / REG...
	BIL... / VER... / POS... / CAD...
	BIL... / FIE... / AMP... / AMP...
	TRA... / TRA... / TRA... / TRA...
	HO... / HO... / FR... / FR...
	VE... / VE... / FR...
	VE... / VE... / LI... / LI...

⚠ BEI ERSATZ AUS SICHERHEITSGRUENDEN NUR ORIGINALBAUTEIL...
FOR REASONS OF SAFETY USE ORIGINAL PARTS ONLY WHEN REP...
IN CASO DI SOSTITUZIONE UTILIZZARE PER RAGIONI DI SICU...
PEZZI DI RICAMBIO ORIGINALI.
EN CAS DE REMPLACEMENT N'UTILISER, POUR DES RAISONS DE...
QUE DES PIECES D'ORIGINE.

BEI EINGRIFFEN SCHUTZMASSNAHMEN FUER MOS-BAUTEILE BEACHTEN...
WHEN HANDLING MOS-CIRCUITS, ALWAYS OBSERVE THE MOS PROTECT...
ADOPERANDO COMPONENTI O CIRCUITI MOS OSSERVARNE LE CORRISP...
MISURE DI PROTEZIONE!
LORS DE LA MANIPULATION DES CIRCUITS MOS, RESPECTER LES
PRESCRIPTIONS MOS!