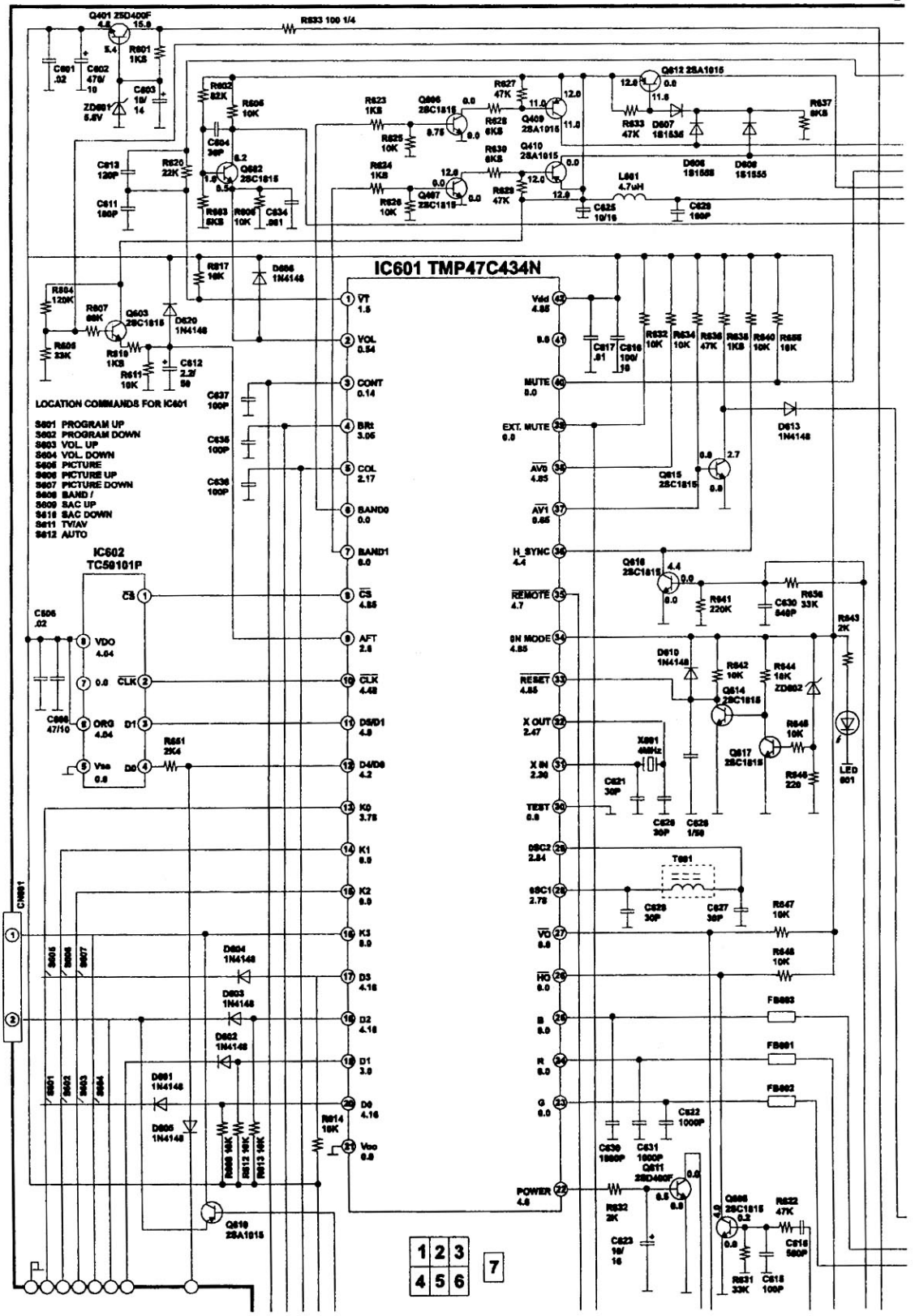
IC601 TMP47C434N
IC602
TC59101P
LOCATION COMMANDS FOR IC601
S601 PROGRAM UP
S602 PROGRAM DOWN
S603 VOL. UP
S604 VOL. DOWN
S605 PICTURE
S606 PICTURE UP
S607 PICTURE DOWN
S608 BAND /
S609 SAC UP
S610 SAC DOWN
S611 TV/AV
S612 AUTO
CN601
LED 601
T601
X601 4MHz
1 2 3
4 5 6
7

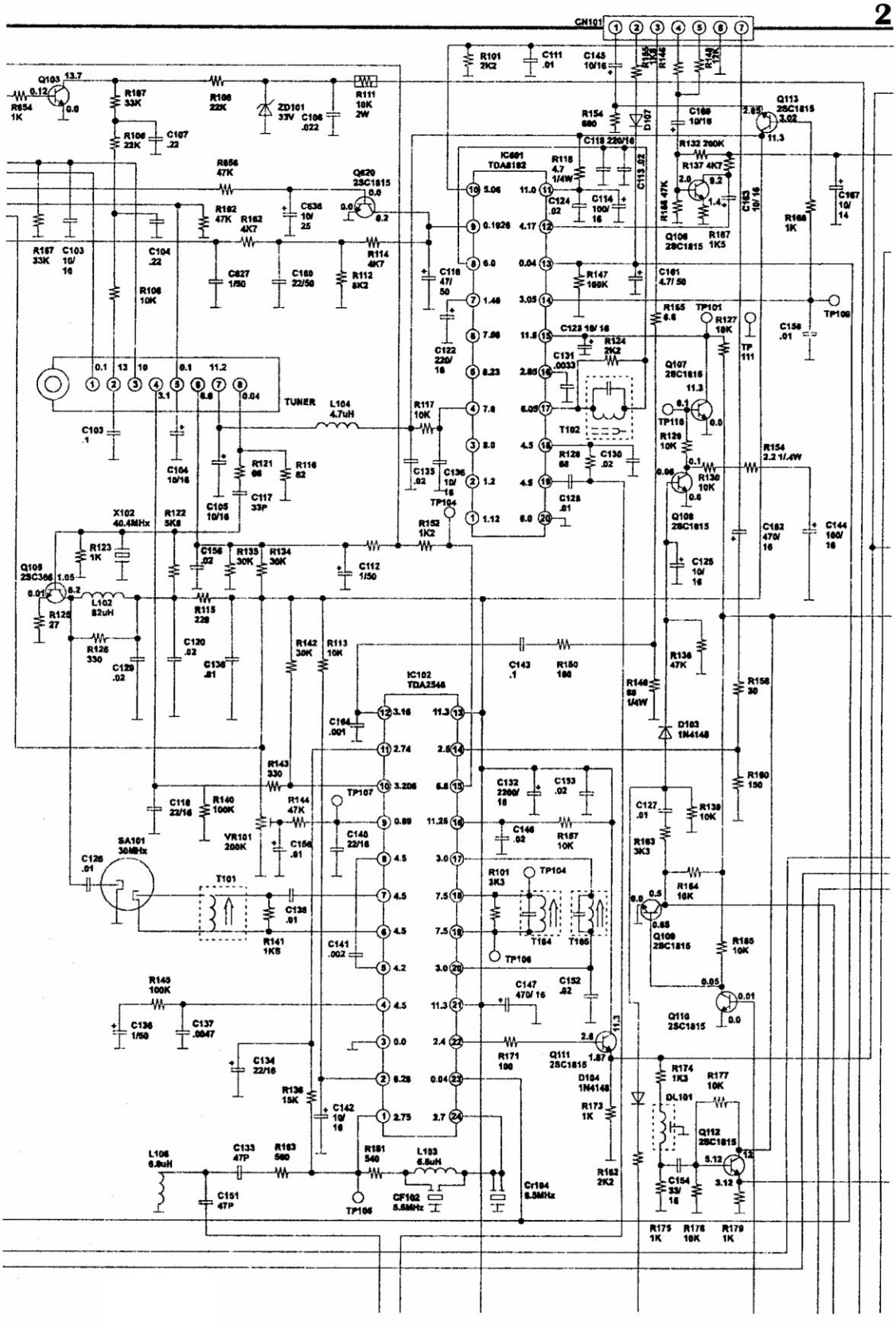
CN101
Q103
R654 1K
R107 33K
R108 22K
ZD101 33V
C106 .022
R111 10K 2W
R106 22K
C107 .22
R656 47K
Q620 2SC1815
R102 47K
R162 4K7
C636 10/ 25
R114 4K7
R112 8K2
C627 1/50
C169 22/50
R167 33K
C103 10/ 16
C104 .22
R106 10K
TUNER
L104 4.7uH
C103 .1
C104 10/16
R121 68
R116 82
C105 10/16
C117 33P
X102 40.4MHz
R122 5K6
R123 1K
Q105 2SC366
L102 82uH
R125 27
R126 330
C129 .02
C120 .02
C136 .01
C156 .02
R135 30K
R134 30K
C112 1/50
R115 220
R142 30K
R113 10K
IC102 TDA2546
C164 .001
R143 330
TP107
C118 22/16
R140 100K
R144 47K
VR101 200K
C156 .01
C140 22/16
SA101 30MHz
C126 .01
T101
C138 .01
R141 1K5
C141 .002
R145 100K
C136 1/50
C137 .0047
C134 22/16
R136 15K
C142 10/ 16
L106 6.8uH
C133 47P
R163 560
C151 47P
TP106
R161 540
L103 6.8uH
CF102 5.5MHz
Cr104 5.5MHz
R101 2K2
C111 .01
C145 10/16
R154 680
D107
C118 220/16
IC601 TDA8162
R118 4.7 1/4W
C124 .02
C114 100/ 16
R147 100K
C116 47/ 50
C122 220/ 16
C123 10/ 16
R124 2K2
C131 .0033
T102
R128 68
C130 .02
C128 .01
R117 10K
C135 .02
C136 10/ 16
TP104
R152 1K2
C143 .1
R150 100
C132 2200/ 16
C133 .02
C146 .02
R157 10K
R101 3K3
TP104
T104
T105
TP106
C147 470/ 16
C152 .02
R171 100
Q111 2SC1815
D104 1N4148
R173 1K
R162 2K2
R132 200K
R137 4K7
C169 10/16
Q113 2SC1815
C167 10/ 14
R168 1K
Q106 2SC1815
R167 1K5
R155 6.8
TP101
R127 10K
TP 111
C156 .01
TP109
Q107 2SC1815
TP110
R129 10K
R130 10K
Q108 2SC1815
R154 2.2 1/4W
C182 470/ 16
C144 100/ 16
C125 10/ 16
R136 47K
R146 68 1/4W
D103 1N4148
R158 30
R160 150
C127 .01
R139 10K
R163 3K3
R164 10K
Q109 2SC1815
R165 10K
Q110 2SC1815
R174 1K3
R177 10K
DL101
Q112 2SC1815
C154 33/ 16
R175 1K
R178 10K
R179 1K

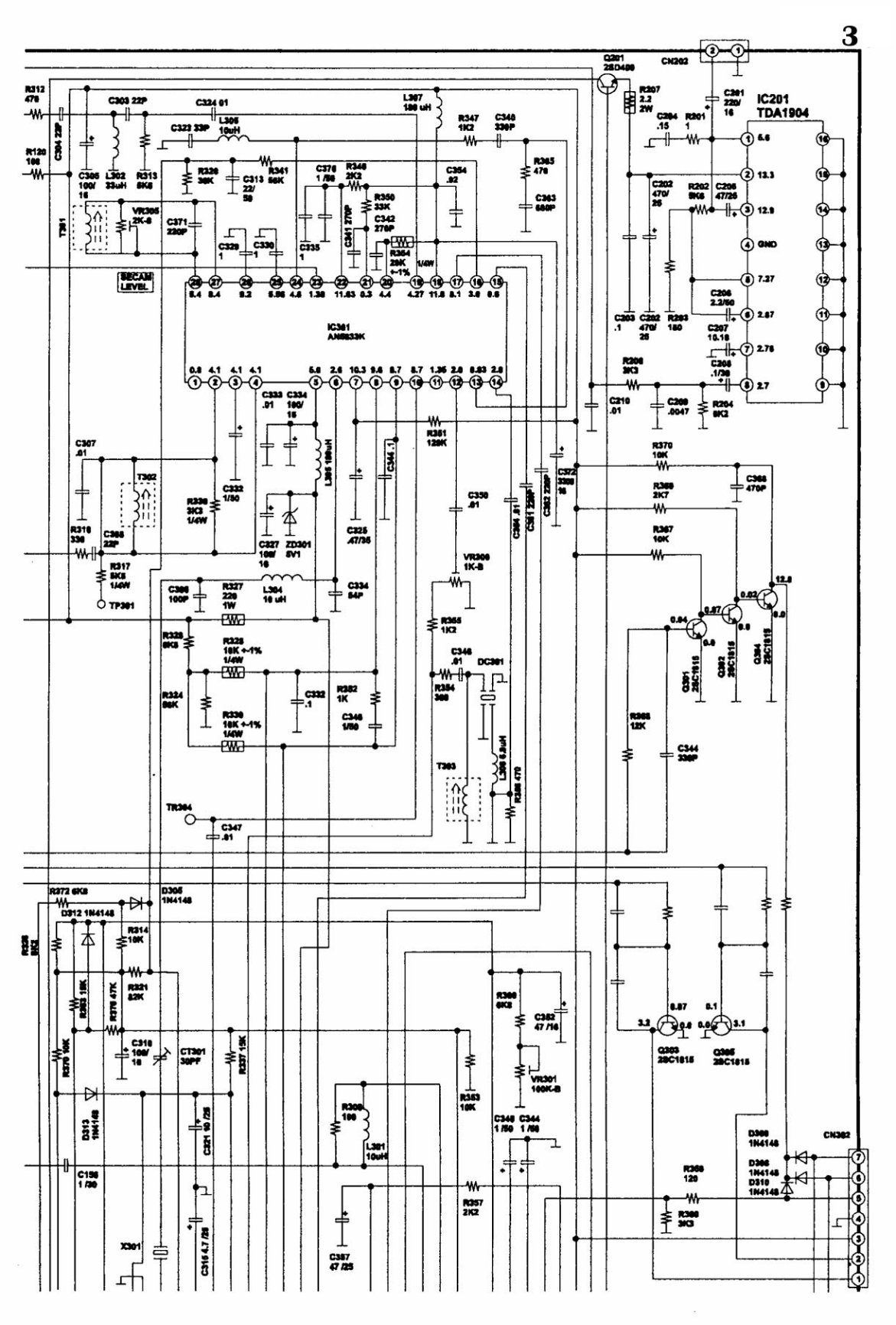
IC201
TDA1904
IC301
AN8833K
SECAM LEVEL
CN302
CN302
Q201 2SD400
Q202 2SC1815
Q203 2SC1815
Q204 2SC1815
Q301 2SC1815
Q302 2SC1815
Q303 2SC1815
Q305 2SC1815
T301
T302
T303
TP301
TR304
DC301
X301
CT301 30PF
ZD301 8V1
D305 1N4148
D306 1N4148
D308 1N4148
D309 1N4148
D310 1N4148
D312 1N4148
D313 1N4148
L301 10uH
L302 33uH
L303 6.8uH
L304 10 uH
L305 10uH
L306 100uH
L307 180 uH
R207 2.2 2W
R272 6K8
R314 10K
R321 82K
R328 10K +-1% 1/4W
R330 10K +-1% 1/4W
R364 20K +-1% 1/4W
R368 12K
R369 2K7
R370 10K
R367 10K
R357 2K2
R353 10K
R366 120
R360 3K3
R312 470
R120 100
R303 18K
R378 47K
R370 10K
R337 15K
R338 3K3 1/4W
R316 330
R317 5K6 1/4W
R327 220 1W
R324 68K
R332 1K
R354 360
R355 1K2
R356 470
R358 6K8
R362 47 /16
R363 680P
R365 470
R366 470P
R347 1K2
R348 330P
R361 120K
R350 33K
R342 270P
R341 68K
R326 39K
R313 6K8
R303 22P
R324 01
R323 33P
R304 22P
R306 100/ 16
R302 33uH
R313 6K8
R371 220P
R329 1
R330 1
R335 1
R376 1 /50
R346 2K2
R354 .92
R342 270P
R342 270P
R307 100/ 16
R332 1/50
R334 54P
R325 .47/35
R327 100/ 16
R346 1/50
R347 .01
R348 .01
R350 .01
R344 .1
R372 330P
R382 220P
R384 .01
R385 .01
R386 .01
R387 47 /25
R388 .01
R389 .01
R390 .01
R391 .01
R392 .01
R393 .01
R394 .01
R395 .01
R396 .01
R397 .01
R398 .01
R399 .01
R400 .01
R401 .01
R402 .01
R403 .01
R404 .01
R405 .01
R406 .01
R407 .01

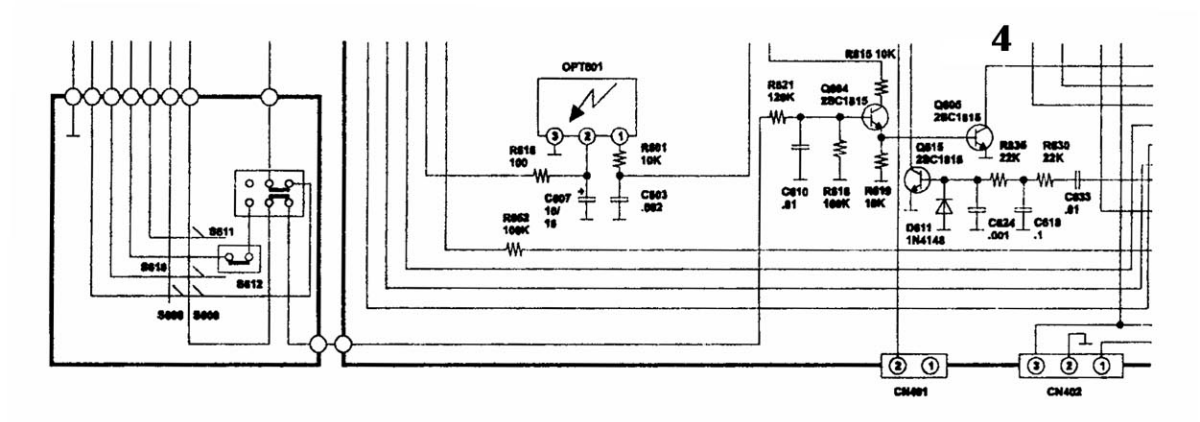
OPT801
R815 10K
R521 120K
Q804 2SC1815
Q806 2SC1815
Q815 2SC1815
R836 22K
R830 22K
R818 100
R801 10K
C807 10/ 16
C803 .082
R852 100K
C810 .81
R816 100K
R819 10K
D811 1N4148
C824 .001
C819 .1
C833 .81
S611
S610
S612
S600
S600
CN401
CN402

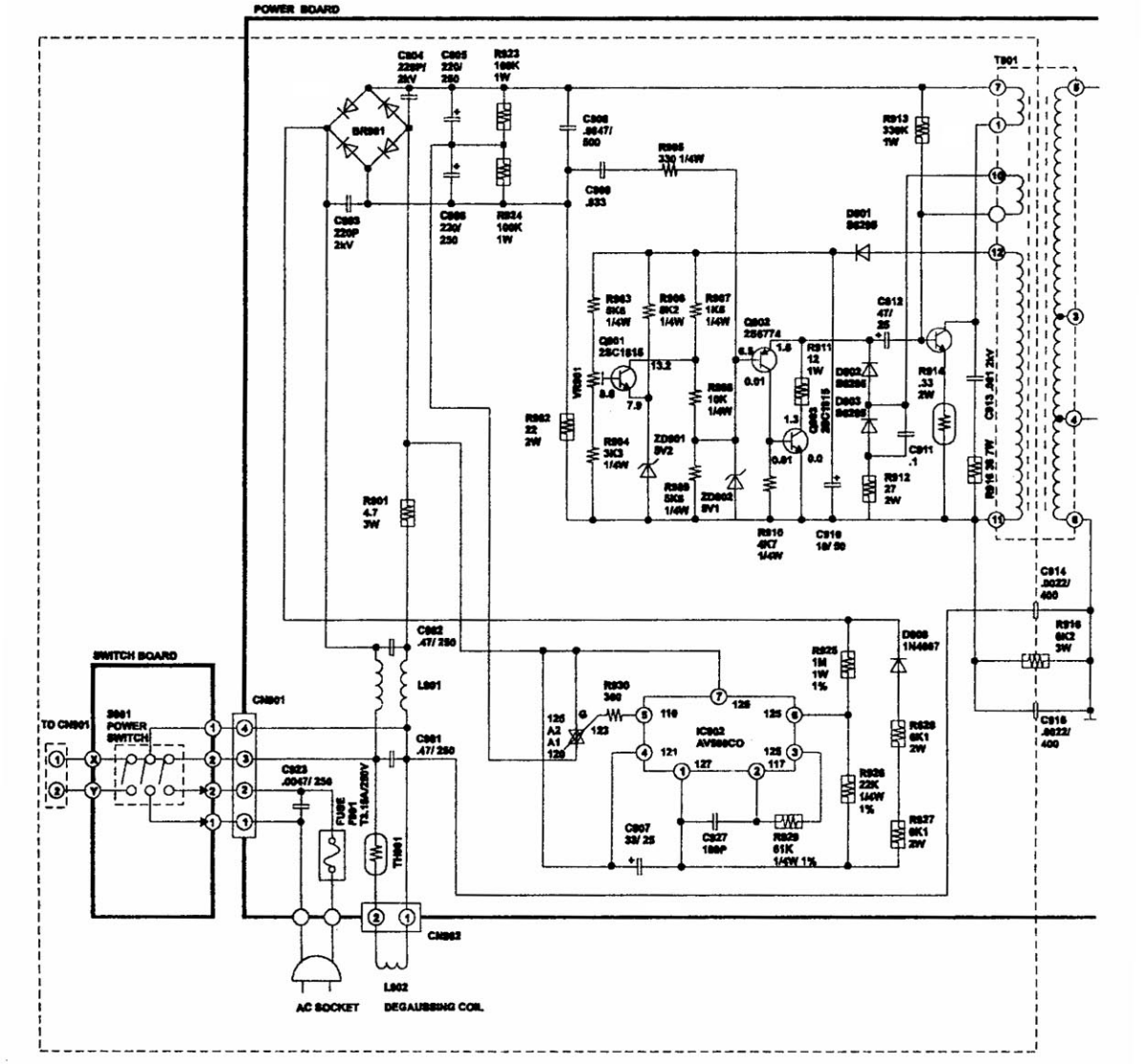
POWER BOARD
C804 2200P/ 2kV
C805 220/ 250
R823 100K 1W
BR801
C803 220P 2kV
C806 220/ 250
R824 100K 1W
C808 .0047/ 500
R805 330 1/4W
C809 .033
T801
R913 330K 1W
D801 1S2398
R963 8K6 1/4W
R966 8K2 1/4W
R967 1K6 1/4W
Q801 2SC1815
Q802 2SC1774
R911 12 1W
C912 47/ 25
D802 1S2398
D803 1S2398
R914 .33 2W
R962 22 2W
VR801
R964 3K3 1/4W
ZD801 8V2
R968 10K 1/4W
Q803 2SC1815
C911 .1
R912 27 2W
R965 5K6 1/4W
ZD802 8V1
R910 4K7 1/4W
C910 10/ 50
C913 .001 2kV
R915 39 7W
R901 4.7 3W
C914 .0022/ 400
R916 8K2 3W
C915 .0022/ 400
SWITCH BOARD
TO CN801
S801 POWER SWITCH
CN801
C902 .47/ 250
L801
C901 .47/ 250
C923 .0047/ 250
FUSE F801 T3.15A/250V
TH801
R930 360
IC902 AV9600CO
R925 1M 1W 1%
D808 1N4007
R928 6K1 2W
R926 22K 1/4W 1%
R927 6K1 2W
C907 33/ 25
C927 180P
R929 61K 1/4W 1%
CN802
AC SOCKET
L802
DEGAUSSING COIL

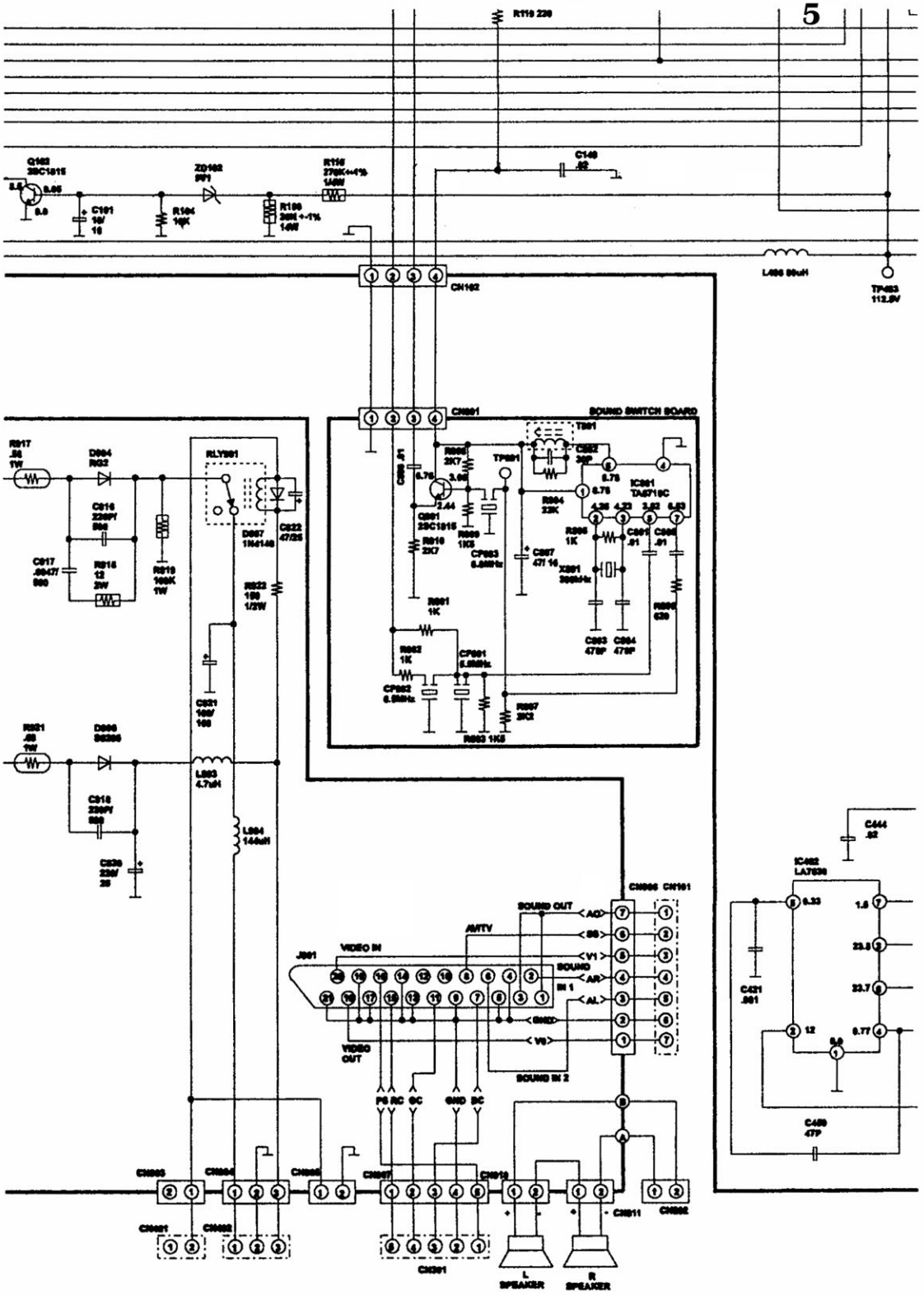
SOUND SWITCH BOARD
CN102
CN801
RLY801
IC801
TA8719C
IC402
LA7530
J801
VIDEO IN
VIDEO OUT
SOUND OUT
SOUND IN 1
SOUND IN 2
AV/TV
L SPEAKER
R SPEAKER

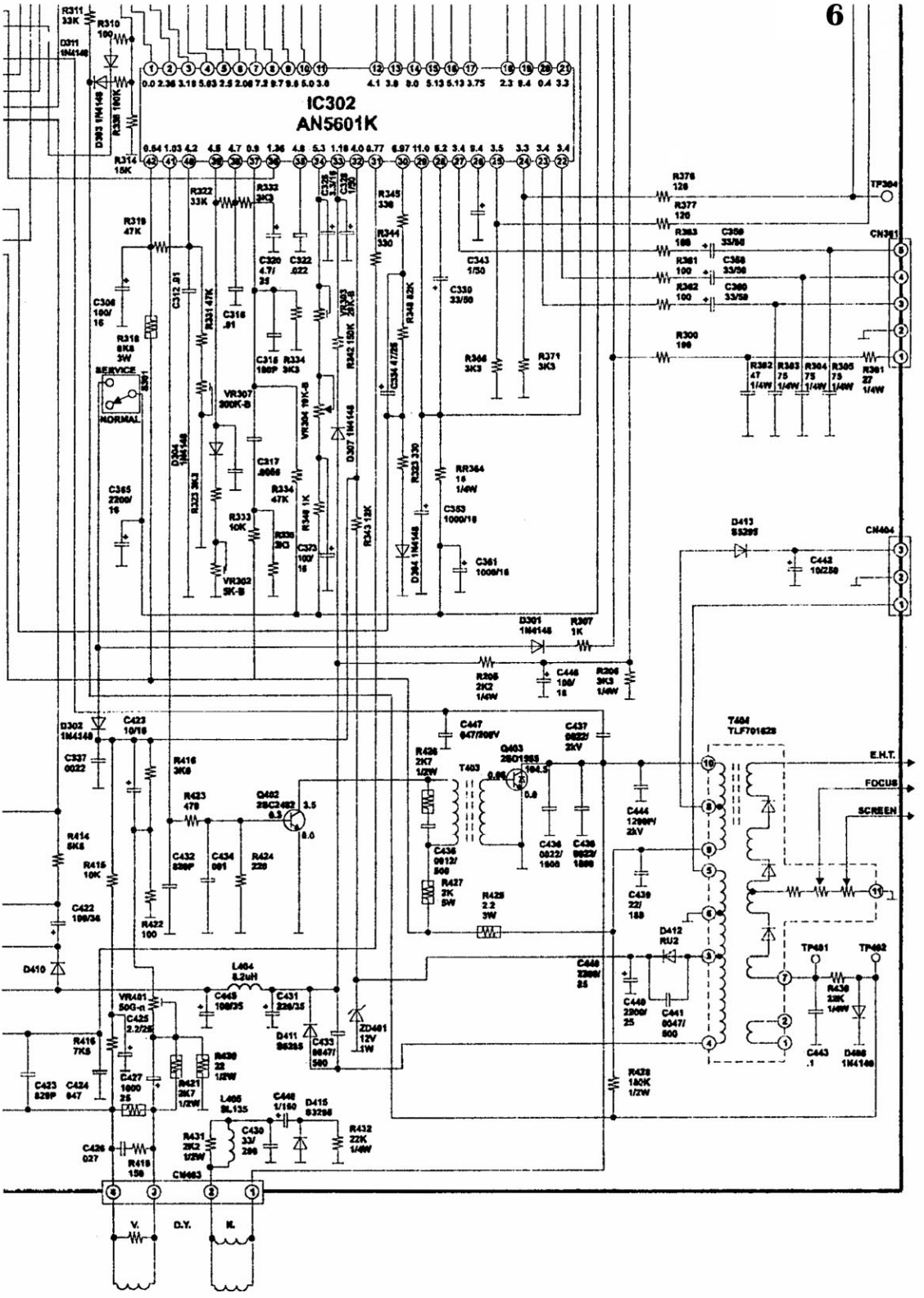
IC302
AN5601K
SERVICE
NORMAL
E.H.T.
FOCUS
SCREEN
V.
D.Y.
K.

HANDSET BOARD

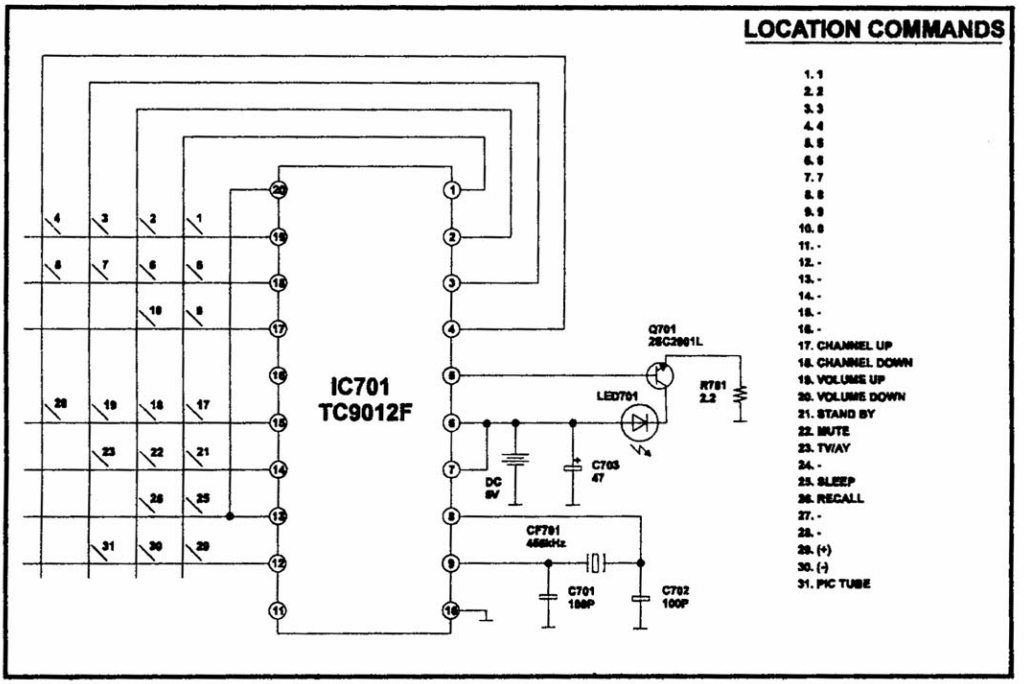
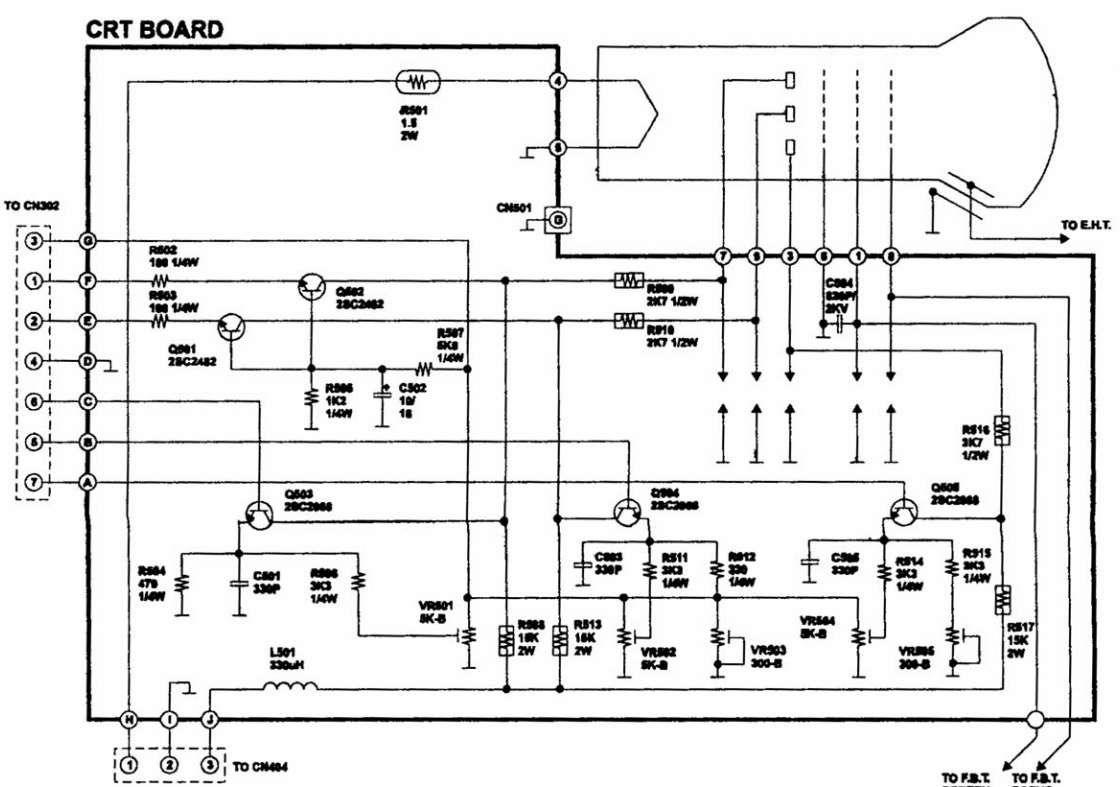
CRT BOARD