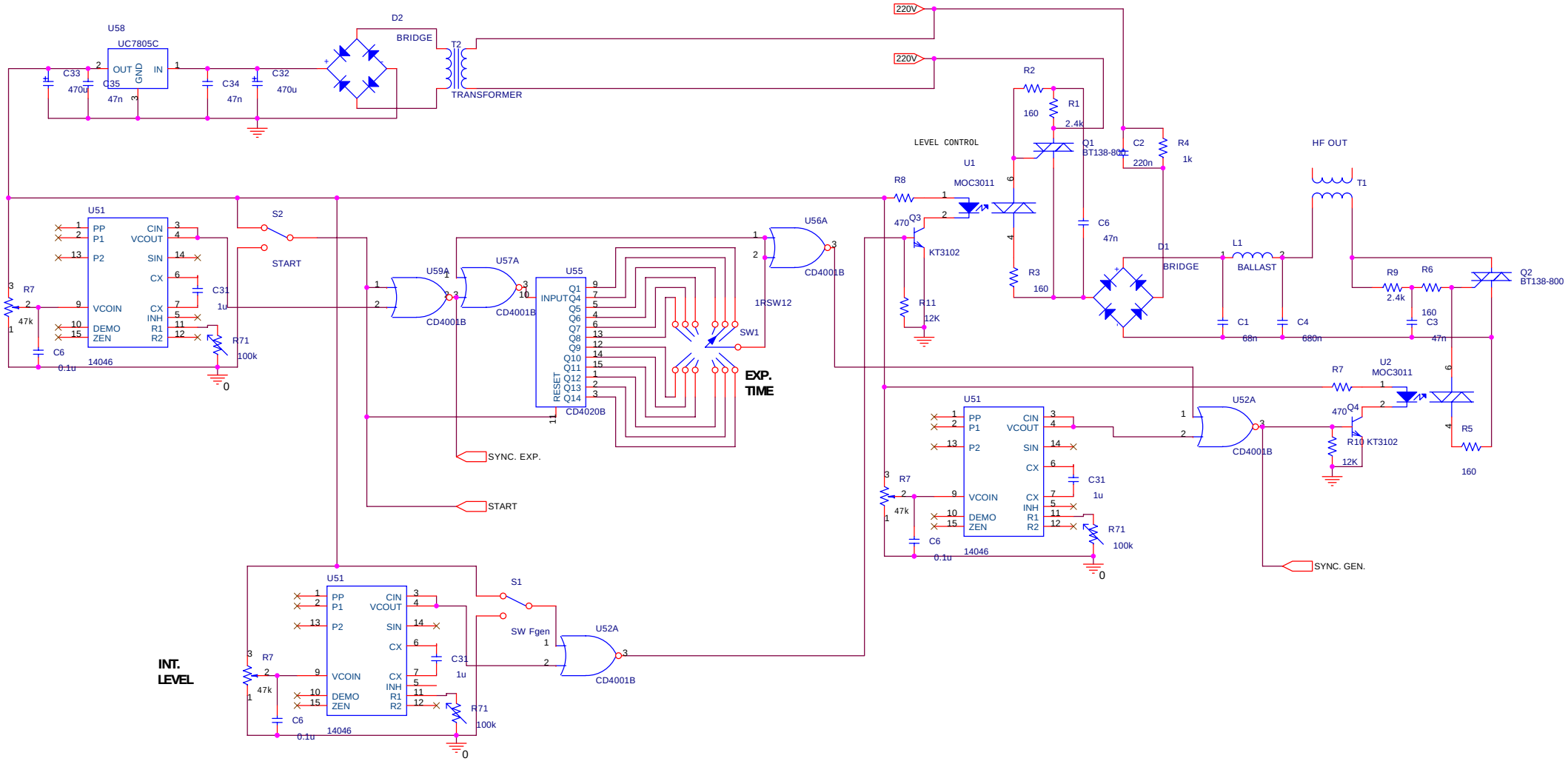

Title	<Title>	
Size A3	Document Number <Doc>	Rev <RevCode>
Date: Monday, February 16, 2004	Sheet 1 of 1	