SELF-DIAGNOSTIC FUNCTION

SERVICE MANUAL

FE-1 CHASSIS

MODEL	COMMANDER	DEST	CHASSIS NO.	MODEL	COMMANDER	DEST	CHASSIS NO.
KV-25K5A	RM-883	Italian	SCC-Q06C-A	KV-29K5A	RM-883	Italian	SCC-Q06B-A
KV-25K5B	RM-883	French	SCC-Q02C-A	KV-29K5B	RM-883	French	SCC-Q02B-A
KV-25K5D	RM-883	AEP	SCC-Q04C-A	KV-29K5D	RM-883	AEP	SCC-Q04B-A
KV-25K5E	RM-883	Spanish	SCC-Q05C-A	KV-29K5E	RM-883	Spanish	SCC-Q05B-A
KV-25K5U	RM-883	UK	SCC-Q01C-A	KV-29K5U	RM-883	UK	SCC-Q01B-A

MICROFILM

TRINITRON® COLOR TV

SONY®

ITEM MODEL	Television System	Stereo System	Channel Coverage	Color System
Italian	B/G/H	GERMAN Stereo	ITALIA VHF : A-H2 (C) UHF : 21-69 PAL B/G/H VHF : E2-E12 UHF : E21-E69 CABLE TV (1) : S1-S41 CABLE TV (2) : S01-S05, M1-M10, U1-U10	PAL NTSC4.43, NTSC3.58 (VIDEO IN)
French	B/G/H, D/K, L, I	GERMAN/NICAM Stereo	L VHF : F02-F10 UHF : F21-F60 CABLE : B-Q B/G/H VHF : E2-E12 UHF : E21-E69 CABLE TV (1) : S1-S41 CABLE TV (2) : S01-S05, M1-M10, U1-U10 ITALIA VHF : A-H2 (C) UHF : 21-69 I UHF : B21-B69	PAL, SECAM NTSC4.43, NTSC3.58 (VIDEO IN)
AEP	B/G/H, D/K	GERMAN Stereo	PAL B/G/H VHF : E2-E12 UHF : E21-E69 CABLE TV (1) : S1-S41 CABLE TV (2) : S01-S05, M1-M10, U1-U10 ITALIA VHF : A-H2 (C) UHF : 21-69 D/K VHF : R01-R12 UHF : R21-R69	PAL, SECAM NTSC4.43, NTSC3.58 (VIDEO IN)
Spanish	B/G/H, D/K	GERMAN/NICAM Stereo	PAL B/G VHF : E2-E12 UHF : E21-E69 CABLE TV (1) : S1-S41 CABLE TV (2) : S01-S05, M1-M10, U1-U10 ITALIA VHF : A-H2 (C) UHF : 21-69	PAL, SECAM NTSC4.43, NTSC3.58 (VIDEO IN)
UK	I	NICAM Stereo	UHF : B21-B69	PAL, SECAM NTSC4.43, NTSC3.58 (VIDEO IN)

MODEL	25K5A	25K5B	25K5D	25K5E	25K5U	29K5A	29K5B	29K5D	29K5E	29K5U
Power Consumption	89 W	97 W	97 W	97 W	139 W	100.1 W	108 W	108 W	108 W	158.5 W

[PICTURE TUBE]

KV-25K5 Super Trinitron
Approx. 63cm (25 inches)
(Approx. 59cm picture measured diagonally)
110 degree deflection

KV-29K5 Super Trinitron
Approx. 72cm (29 inches)
(Approx. 68cm picture measured diagonally)
110 degree deflection

Input/Output Terminals

[REAR]

1/1 21-pin Euro connector (CENELEC standard).
- Inputs for Audio and Video signals.
- Inputs for RGB.
- Outputs of TV Video and Audio signals.

2/S2 21-pin Euro connector.
- inputs for Audio and Video signals.
- inputs for S Video.
- outputs for Audio and Video signals (selectable).

Phono Jack
- Outputs for Audio Signals

[FRONT]

3 Video input - phono jack

3 Audio inputs - phono jacks

S3 S Video input 4 pin DIN

Headphone jacks : stereo minijack

Sound output	2 x 20W (Music Power)
Power requirements	220 - 240V
Dimensions	
KV-25K5	Approx 612x515x485mm
KV-29K5	Approx 679x581x526mm
Weight	
KV-25K5	Approx 37kg
KV-29K5	Approx 49.5kg
Supplied accessories	RM-883 Remote Commander (1) IEC designated R6 battery (1)
Other features	NICAM*, FASTEXT, TOPTEXT *(KV-25K5B/25K5E/25K5U/ 29K5B/29K5E/29K5U only)

[RM-883]

Remote control system	infrared control
Power requirements	1.5V dc 1 battery IEC designation R6 (size AA)
Dimensions	Approx 65x225x21mm (w/h/d)
Weight	Approx 157g (Not including battery)

Model Name / Item	KV-25K5A KV-29K5A	KV-25K5B KV-29K5B	KV-25K5D KV-29K5D	KV-25K5E KV-29K5E	KV-25K5U KV-29K5U
Pal Comb	OFF	OFF	OFF	OFF	OFF
PIP	OFF	OFF	OFF	OFF	OFF
RGB Priority	OFF	OFF	OFF	ON	OFF
Woofer Box	OFF	OFF	OFF	OFF	OFF
Scart 1	ON	ON	ON	ON	ON
Scart 2	ON	ON	ON	ON	ON
Front in (3)	ON	ON	ON	ON	ON
Scart 4	OFF	OFF	OFF	OFF	OFF
Projector	OFF	OFF	OFF	OFF	OFF
AKB in 16:9 mode	ON	ON	ON	ON	ON
Norm B/G/H	ON	ON	ON	ON	OFF
Norm I	OFF	ON	OFF	OFF	ON
Norm D/K	OFF	ON	ON	ON	OFF
Norm AUS	OFF	OFF	OFF	OFF	OFF
Norm L	OFF	ON	OFF	OFF	OFF
Norm SAT	OFF	OFF	OFF	OFF	OFF
Norm M	OFF	OFF	OFF	OFF	OFF
Teletext	ON	ON	ON	ON	ON
Nicam Stereo	OFF	ON	OFF	ON	ON
Language Preset	Italian	French	German	Spanish	English

WARNING (KV-25K5U / KV-29K5U only)

The flexible mains lead is supplied connected to a **B.S. 1363** fused plug having a fuse of **5 AMP** capacity. Should the fuse need to be replaced, use a **5 AMP FUSE** approved by **ASTA** to **BS 1362**, ie one that carries the ASTA mark.

IF THE PLUG SUPPLIED WITH THIS APPLIANCE IS NOT SUITABLE FOR THE OUTLET SOCKETS IN YOUR HOME, IT SHOULD BE CUT OFF AND AN APPROPRIATE PLUG FITTED. THE PLUG SEVERED FROM THE MAINS LEAD MUST BE DESTROYED AS A PLUG WITH BARED WIRES IS DANGEROUS IF ENGAGED IN A LIVE OUTLET SOCKET.

When an alternative type of plug is used it should be fitted with a **5 AMP FUSE**, otherwise the circuit should be protected by a **5 AMP FUSE** at the distribution board.

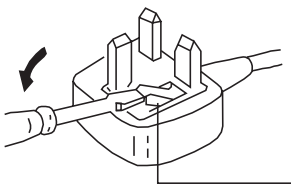

How to replace the fuse.
Open the fuse compartment with a screwdriver blade and replace the fuse.

21 pin connector (1/1 , 2 / S2)

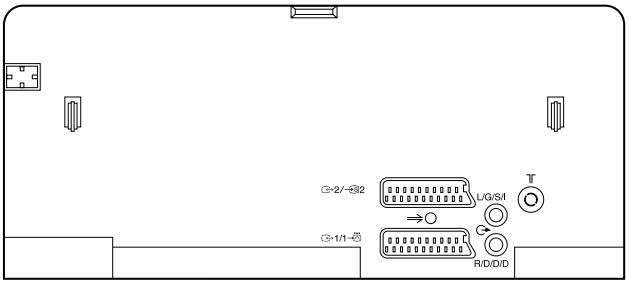

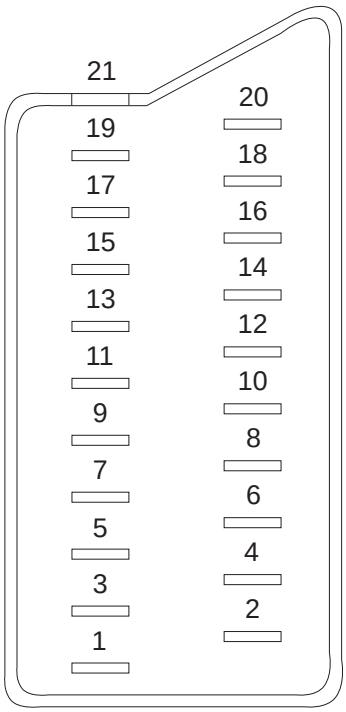

Pin No	1	2	4	Signal	Signal level
1	○	○	○	Audio output B (right)	Standard level : 0.5V rms Output impedence : Less than 1kohm*
2	○	○	○	Audio output B (right)	Standard level : 0.5V rms Output impedence : More than 10kohm*
3	○	○	○	Audio output A (left)	Standard level : 0.5V rms Output impedence : Less than 1kohm*
4	○	○	○	Ground (audio)	
5	○	○	○	Ground (blue)	
6	○	○	○	Audio input A (left)	Standard level : 0.5V rms Output impedence : More than 10kohm*
7	○	●	●	Blue input	0.7 +/- 3dB, 75 ohms positive
8	○	○	○	Function select (AV control)	High state (9.5-12V) : Part mode Low state (0-2V) : TV mode Input impedence : More than 10K ohms Input capacitance : Less than 2nF
9	○	○	○	Ground (green)	
10	○	○	○	Open	
11	○	●	●	Green	Green signal : 0.7 +/- 3dB, 75 ohms, positive
12	○	○	○	Open	
13	○	○	○	Ground (red)	
14	○	○	○	Ground (blanking)	
15	○	–	–	Red input	0.7 +/- 3dB, 75 ohms, positive
	–	○	○	(S signal Chroma input)	0.3 +/- 3dB, 75 ohms, positive
16	○	●	●	Blanking input (Ys signal)	High state (1-3V) Low state (0-0.4V) Input impedence : 75 ohms
17	○	○	○	Ground (video output)	
18	○	○	○	Ground (video input)	
19	○	○	○	Video output	1V +/- 3dB, 75ohms, positive sync 0.3V (-3+10dB)
20	○	–	–	Video input	1V +/- 3dB, 75ohms, positive sync 0.3V (-3+10dB)
	–	○	○	Video input Y (S signal)	1V +/- 3dB, 75ohms, positive sync 0.3V (-3+10dB)
21	○	○	○	Common ground (plug, shield)	

○ Connected ● Not Connected (open) * at 20Hz - 20kHz

Pin No	Signal	Signal level
1	Ground	
2	Ground	
3	Y (S signal) input	1V+/- 3dB 75 ohm, positive Sync 0.3V -3/+10dB
4	C (S signal) input	0.3V+/- 3dB 75 ohm, positive Sync

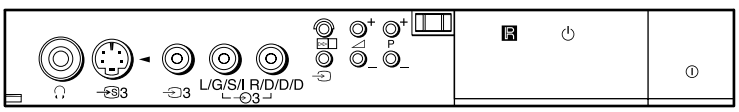

TABLE OF CONTENTS

Section *Title* *Page*

1. GENERAL

Overview of TV buttons 6
Using Select Mode 6
Adjusting the Picture 7
Adjusting the Sound 7
Using the Sleep Timer 8
Viewing Teletext 8
Exchanging Programme Pos 9
Manually Tuning the TV 9
Fine-Tuning Channels 10
Using Optional Equipment 10
Troubleshooting 11
Specifications 11

2. DISASSEMBLY

2-1. Rear Cover Removal 12
2-2. Chassis Assy Removal 12
2-3. Service Position 13
2-4. H1 Board Removal 13
2-5. S1 Board Removal 13
2-6. Picture Tube Removal 14
2-7. Removal and Replacement of the Main - Bracket bottom plates 15

3. SET-UP ADJUSTMENTS

3-1. Beam Landing 16
3-2. Convergence 17
3-3. Screen [G2] White Balance 19
3-4. Focus 19

Section *Title* *Page*

4. CIRCUIT ADJUSTMENTS

4-1. Electrical Adjustments 20
4-2. Test Mode 2 23
4-3. FE-1 Self Diagnostic Software 24

5. DIAGRAMS

5-1. Block Diagram 25
5-2. Circuit Board Location 32
5-3. Schematic Diagrams and Printed Wiring Boards 32
* S1 Board 34
* A Board 41
* VM Board 46
* C Board 49
* H1 Board 51
5-4. Semiconductors 53
5-5. IC Blocks 55

6. EXPLODED VIEWS

6-1. Chassis 56
6-2. Picture Tube 57

7. ELECTRICAL PARTS LIST 58

CAUTION

SHORT CIRCUIT THE ANODE OF THE PICTURE TUBE AND THE ANODE CAP TO THE METAL CHASSIS, CRT SHIELD, OR THE CARBON PAINTED ON THE CRT, AFTER REMOVAL OF THE ANODE CAP

WARNING !!

AN ISOLATING TRANSFORMER SHOULD BE USED DURING ANY SERVICE WORK TO AVOID POSSIBLE SHOCK HAZARD DUE TO LIVE CHASSIS. THE CHASSIS OF THIS RECEIVER IS DIRECTLY CONNECTED TO THE POWER LINE.

SAFETY-RELATED COMPONENT WARNING !!

COMPONENTS IDENTIFIED BY SHADING AND MARKED ⚠ ON THE SCHEMATIC DIAGRAMS, EXPLODED VIEWS AND IN THE PARTS LIST ARE CRITICAL FOR SAFE OPERATION. REPLACE THESE COMPONENTS WITH SONY PARTS WHOSE PART NUMBERS APPEAR AS SHOWN IN THIS MANUAL OR IN SUPPLEMENTS PUBLISHED BY SONY.

ATTENTION

APRES AVOIR DECONNECTE LE CAP DE'LANODE, COURT-CIRCUITER L'ANODE DU TUBE CATHODIQUE ET CELUI DE L'ANODE DU CAP AU CHASSIS METALLIQUE DE L'APPAREIL, OU AU COUCHE DE CARBONE PEINTE SUR LE TUBE CATHODIQUE OU AU BLINDAGE DU TUBE CATHODIQUE.

ATTENTION !!

AFIN D'EVITER TOUT RISQUE D'ELECTROCUTION PROVENANT D'UN CHÁSSIS SOUS TENTION, UN TRANSFORMATEUR D'ISOLEMENT DOIT ETRE UTILISÈ LORS DE TOUT DÈPANNAGE. LE CHÁSSIS DE CE RÈCEPTEUR EST DIRECTMENT RACCORDÈ Á L'ALIMENTATION SECTEUR.

ATTENTION AUX COMPOSANTS RELATIFS Á LA SÈCURITÈ !!

LES COMPOSANTS IDENTIFIÈS PAR UNE TRAME ET PAR UNE MARQUE ⚠ SUR LES SCHÈMAS DE PRINCIPE, LES VUES EXPLOSÈES ET LES LISTES DE PIECES SONT D'UNE IMPORTANCE CRITIQUE POUR LA SÈCURITÈ DU FONCTIONNEMENT, NE LES REMPLACER QUE PAR DES COMPSANTS SONY DONT LE NUMÈRO DE PIÈCE EST INDIQUÈ DANS LE PRÈSENT MANUEL OU DANS DES SUPPLÈMENTS PUBLIÈS PAR SONY.

SECTION 1 GENERAL

The operating instructions mentioned here are partial abstracts from the Operating Manual. The page numbers of the Operating Instruction Manual remain as in the manual.

Basic TV Features

Overview of TV Buttons

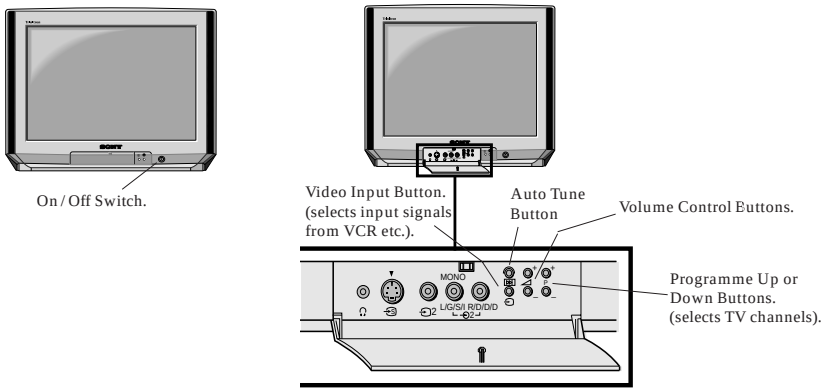

Overview of Remote Control Buttons

To Mute Sound

Press to mute TV sound. Press again to restore the sound.

To Select Channels

Press to select channels.

For double-digit programme numbers, e.g. 23, press -/-- first, then the buttons 2 and 3.

To Change Screen Format

Press to view programmes in 16:9 mode.
Press again to return to 4:3 mode.

To Adjust TV Volume

Press to adjust the volume of the TV.

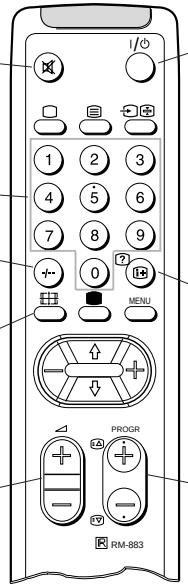

To Temporarily Switch Off TV

Press to temporarily switch off TV. Press again to switch on TV from standby mode.
To save energy we recommend switching off completely when TV is not in use.
NOTE: After 15 -30 minutes without a TV signal and without any button being pressed, the TV switches automatically into standby mode.

To Reveal On Screen Information

Press to reveal all on-screen indications. Press again to cancel.

To Select Channels

Press to select channels.

Additional TV Features

Using Select Mode

You can select different preset picture and sound modes.

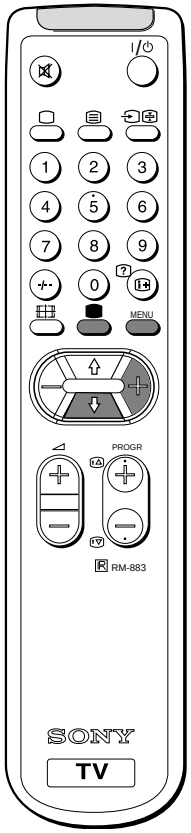

1 Press the MENU button on the remote control to display the menu on the TV screen.

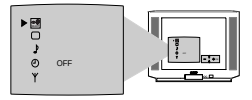

2 With the cursor pointing at the symbol on the TV screen as shown, press the yellow button.

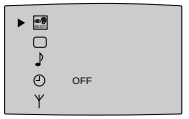

3 Press the blue button to select the desired mode:

- Personal Mode - reverts to settings made in "Adjusting the Picture and Sound" sections of the manual
- Movie Mode - for films
- Live Mode - for live broadcast programmes

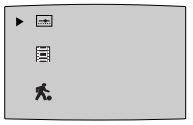

4 Press the MENU button to remove the menu display from the TV screen.

Note: The mode selected in step 3 is now stored.

Changing Modes Quickly

1 Press the ● button on the remote control to display the three different modes.

2 Press the ● button again to select your desired mode.

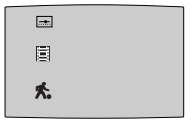

Adjusting the Picture

Although the picture is adjusted at the factory, you can modify it to suit your own requirement.

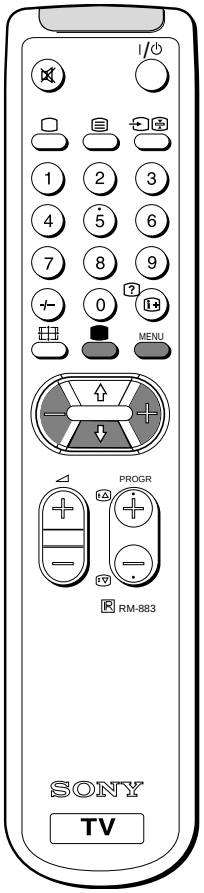

1 Press the ■ button on the remote control to display the three different modes on the TV screen.

2 Press the ■ button to highlight the personal mode symbol as shown.

3 Press the MENU button to display the menu on the TV screen.

4 Press the blue button on the control to select the ▢ symbol on the TV screen then press the yellow button.

5 Press the blue button to select the item you wish to change (see below).

6 Press the red or yellow button to alter the selected item.

7 Press the MENU button to remove the menu display from the TV screen.

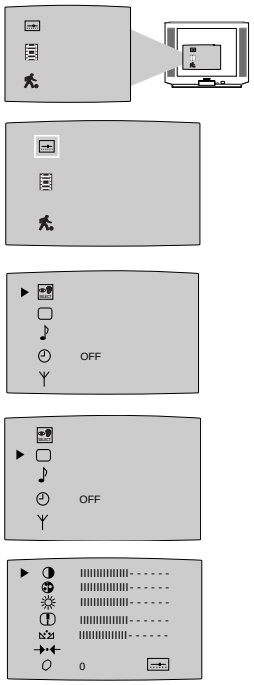

Symbol	Item
◑	• Contrast
	• Colour
☼	• Brightness
	• Sharpness
	• Hue control (only for NTSC video signals)
	• Reset - resets to factory preset picture level
	• Picture rotation - adjusts picture tilt (only for KV-29C5D model)
	• Represents the mode selected in the “Using Select Mode” section.

Adjusting the Sound

Although the sound is adjusted at the factory, you can modify it to suit your own requirement.

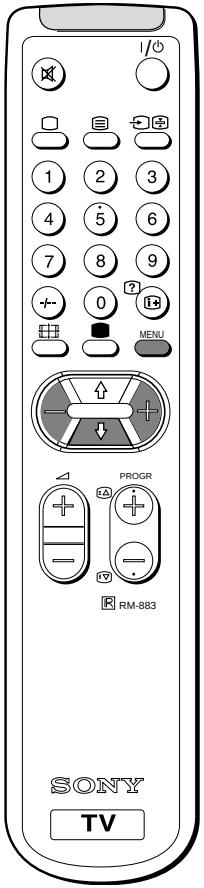

1 Press the ■ button on the remote control to display the three different modes on the TV screen.

2 Press the ■ button to highlight the personal mode symbol as shown.

3 Press the MENU button to display the menu on the TV screen.

4 Press the blue button to select the ♪ symbol on the TV screen then press the yellow button.

5 Press the blue button to select the item you wish to change (see below).

6 Press the red or yellow button to alter the selected item.

7 Press the MENU button to remove the menu display from the TV screen.

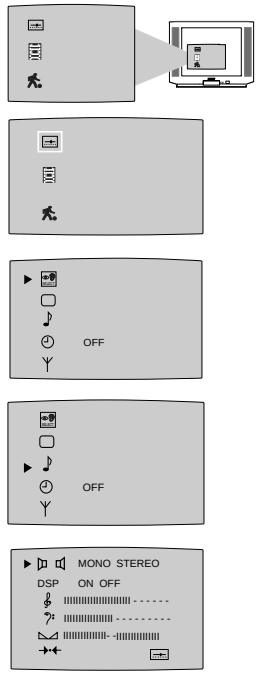

Symbol	Item
	• Mono sound / Stereo sound A: Channel 1 sound / B: Channel 2 sound (to select your desired language from a dual sound broadcast)
DSP	• On / Off (digital sound processor)
	• Treble
	• Bass
	• Balance
	• Reset (resets to factory preset sound level)
	• Represents the mode selected in the “Using Select Mode” section of the manual.

Using the Sleep Timer

The TV may be set to switch automatically to the standby mode after a length of time chosen by you. You may set the time in 15 minute steps up to 4 hours.

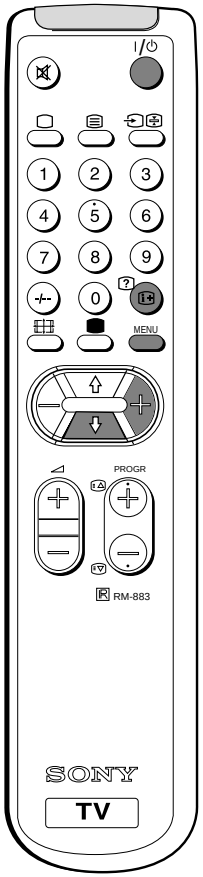

1 Press the MENU button on the remote control to display the menu on the TV screen.

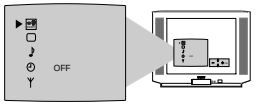

2 Press the blue button on the control to select the ⏲ symbol on the TV screen, then press the yellow button.

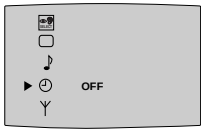

3 Press the yellow button repeatedly until the required amount of time delay appears on the screen.

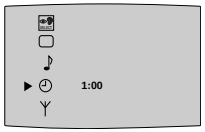

4 Once the time delay has been selected, press the MENU button to remove the on-screen display.

One minute before standby, the display shown appears on the screen.

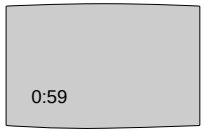

Notes:

- When watching TV, press the ⓘ button to display time remaining.
- To return to normal operation from standby mode, press the I/⏻ button.

Viewing Teletext

Teletext is an information service transmitted by most TV stations.

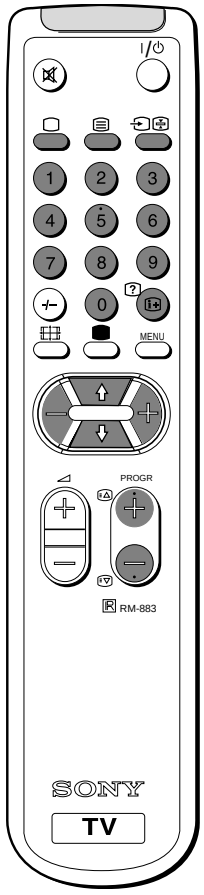

Selecting Teletext

1 Press a number button on the remote control to select the channel which carries the teletext service you wish to receive.

2 Press the ☰ button on the remote control to switch on teletext.

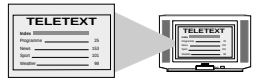

3 Input three digits for the page number using the numbered buttons on the control.

4 Press the ▢ button to switch off teletext.

Note: Teletext errors may occur if the broadcasting signals are weak.

Using Other Teletext Functions

To Superimpose Teletext on to the TV

Press ☰ once in teletext mode or twice in TV mode to superimpose teletext on to the TV screen.

Press ☰ again to cancel teletext mode.

To Move to Next or Preceding Page

Press PROGR +/- on the remote control to select the previous or next page.

To Freeze a Teletext Page

Press ⧉ on the control to freeze the page.
Press ⧉ again to cancel the freeze.

Revealing concealed information (eg: answers to a quiz).

Press ? to reveal information.
Press again to conceal the information.

Using colour buttons to access pages (Fastext)

When the colour coded menu appears at the bottom of a page, press the colour button (green, red, yellow or blue) to access the corresponding page.

Exchanging Programme Positions

After tuning you may wish to change the order in which the channels appear on the TV. You may wish for example to exchange the channel on programme number 8 with the channel on programme number 4.

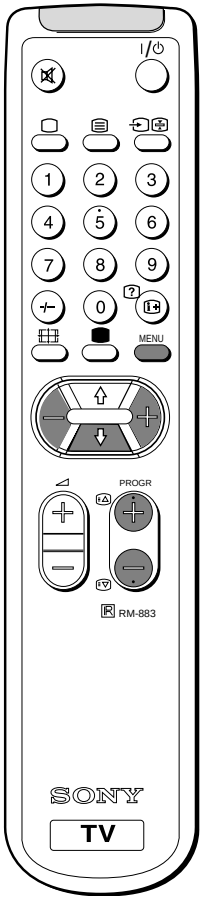

1 Press the MENU button on the remote control.

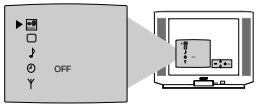

2 Press the blue button on the control to select ⅄ on the TV screen, then press the yellow button.

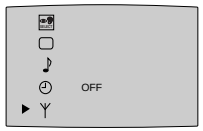

3 Press the blue button to select ⇆ then press the yellow button.

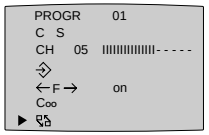

4 With the cursor pointing at PROGR on the TV screen as shown, press PROGR + or - button until the channel you wish to rearrange appears on screen, then press the blue button once.

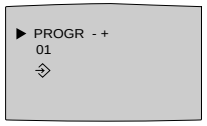

5 Press the red or yellow button to select the new programme number (e.g. PROGR 04) for your selected channel.

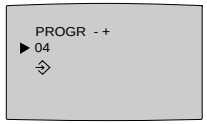

6 Press the blue button to select ⇆ then press the yellow button to exchange the channels.

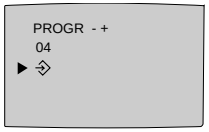

7 Repeat steps 4 to 6 if you wish to change the order of the other channels on your TV, then press MENU to return to normal TV screen.

8 Press the PROGR+/- button to view your selected channels on their new programme numbers.

Manually Tuning the TV

You have already tuned the TV to receive all available channels using the `Automatically Tuning the TV' procedure at the start of this manual. You can however carry out this operation manually using the following instructions.

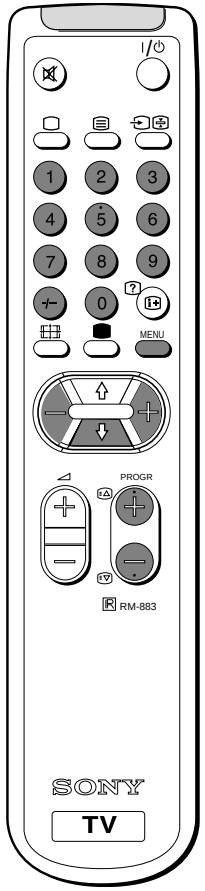

1 Press the MENU button on the remote control to display the menu on the TV screen.

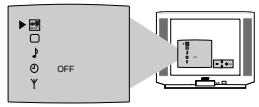

2 Press the blue button to select the ⅄ symbol on the TV screen then press the yellow button.

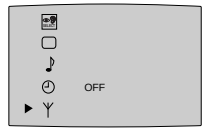

3 With the cursor pointing at PROGR on the TV screen as shown, press PROGR + or - button on the remote control to allocate a programme number to the channel (eg PROGR 01). For double digit numbers e.g. 55, press the -/-- button on the remote control then the corresponding numbered buttons.

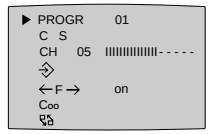

4 Press the blue button to select the channel type (C to preset a regular channel or S to preset a cable channel) then press the yellow button to highlight the desired channel type.

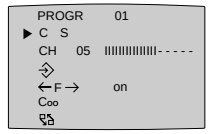

5 Press the blue button to select the tuning bar scale then press the yellow or red button once to start the channel search. (Yellow to search up the scale or red to search down). When a channel is found it appears on the TV screen.

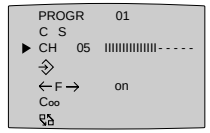

6 If you do not wish to store this channel on the programme number you selected, press the yellow or red button to continue searching for the desired channel.

7 If this is the channel you wish to store, press the blue button to select the ⇆ symbol on the screen then press the yellow button to store.

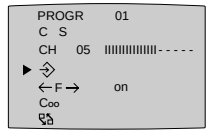

8 Repeat steps 3 to 7 if you wish to store more channels then press the MENU button to remove the menu from the TV screen.

Fine-Tuning Channels

If a channel is slightly off tune, you can use this fine tune procedure to obtain a better picture reception.

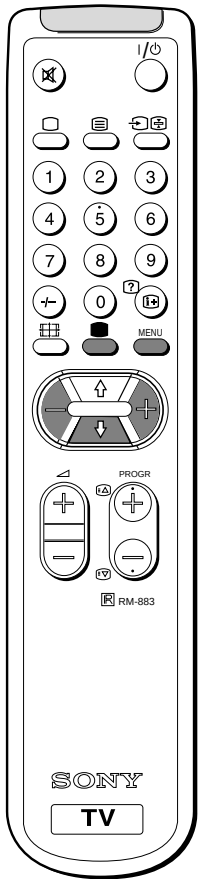

1 With the channel you wish to fine-tune on the screen, press the MENU button on the remote control. The menu display appears on the TV screen.

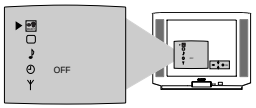

2 Press the blue button on the remote control to select the Y symbol on the TV screen then press the yellow button.

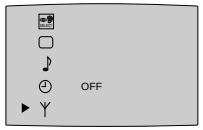

3 Press the blue button to select the ←F→ symbol on the TV screen then press the red or yellow button to adjust the tuning.

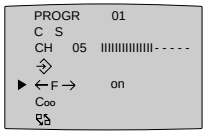

4 Press the blue button to select the symbol on the TV screen then press the yellow button to store.

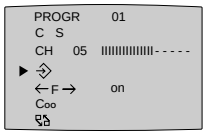

5 Press the MENU button to remove the menu from the TV screen.

Using Optional Equipment

You can connect optional audio or video equipment to your TV, such as a VCR, a camcorder or video games as shown.

Select and View the Input Signal

1 Connect your equipment to the designated TV socket.

2 Press the button repeatedly on your remote control until the correct input symbol appears on the TV screen.

Symbol	Input signals
1	• Audio / video input signal through the Euro AV connector **F**
	• RGB input signal through the Euro AV connector **F**
2	• Audio / video input signal through the Euro AV connector **E** or the phono sockets **C** and **D**
S	• S video input signal through the socket **B**.

3 Switch on the connected equipment.

4 To return to normal TV picture, press the button on the remote control.

Note: To avoid picture distortion, do not connect equipment to the **B** , **C** or **E** connectors at the same time.

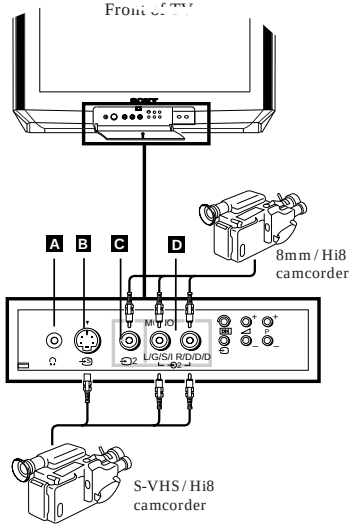

Additional Information

Connecting a VCR

We recommend you tune in the VCR signal to TV programme number `0' using the `Manually Tuning in the TV' section of this instruction manual.

Connecting Headphones

Plug in your headphones to the socket **A** on the front of the TV set.

Connecting Decoders

Plug in decoders to the socket **F** on the rear of the TV.

Connecting to External Audio Equipment

Plug in your Hi-Fi equipment to the **G** sockets on the rear of the TV if you wish to amplify the audio output from the TV.

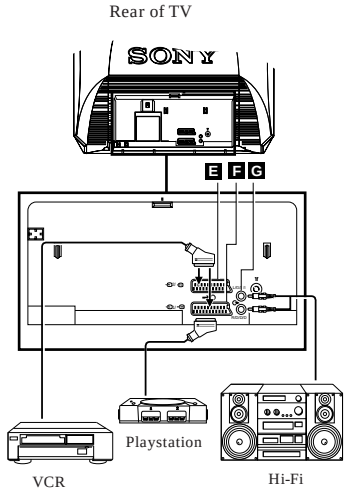

Troubleshooting

Here are some simple solutions to problems which may affect the picture and sound.

Problem	Solution
No picture (screen is dark), no sound	• Plug the TV in. • Press the ⏀ button on the front of TV. • If the ⏻ indicator is on press I/⏻ button or a programme number button on the remote control. • Check the aerial connection. • Check that the selected video source is on. • Turn the TV off for 3 or 4 seconds and then turn it on again using the ⏀ button on the front of the TV.
Poor or no picture (screen is dark), but good sound	• Using the MENU system, select the Picture Adjustment display. Adjust the brightness, picture and colour balance levels. • From the Picture Adjustment display select →·← to return to the factory settings.
Poor picture quality when watching a RGB video source.	• Press the ⊖ button repeatedly on the remote control until the RGB symbol ⊖ is displayed on the screen.
Good picture, no sound	• Press the ◿ +/– button on the remote control. • If 🔇 is displayed on the screen, press the 🔇 button on the remote control.
No colour on colour programmes	• Using the MENU system, select the Picture Adjustment display. Adjust the colour balance. • From the Picture Adjustment display select →·← to return to the factory settings.
Distorted picture when changing programmes or selecting teletext	• Turn off any equipment connected to the 21 pin Euro connector on the rear of the TV.
Remote control does not function	• Replace the batteries.

- **If you continue to have these problems, have your TV serviced by qualified personnel.**
- **NEVER open the casing yourself.**

Specifications

TV system
I

Colour system
PAL
NTSC 3.58, 4.43 (only Video In)

Channel coverage
UHF: B21-B69

Picture tube
KV-25K5U:
Super Trinitron
Approx. 63 cm (25 inches) (Approx. 59 cm picture measured diagonally),
110 deflection
KV-29K5U:
Super Trinitron
Approx. 72 cm (29 inches) (Approx. 68 cm picture measured diagonally),
110 deflection

Inputs
• Rear Terminals
1 / ⊖ 21-pin Euro connector (CENELEC standard) including audio / video input, RGB input, TV audio / video output
2 / ⊖S 21-pin Euro connector (CENELEC standard) including audio / video input, S-video input, Monitor audio / video output
• Front Terminals
2 video input - phono jack
2 audio inputs - phono jacks
S video input - 4 pin DIN

Outputs
Headphones jack - minijack stereo
Audio outputs - phono jacks

Sound output:
2 x 10 W (RMS)

Power consumption
KV-25K5U: 139 W
KV-29K5U: 158.5 W

Standby Power consumption
1 W

Dimensions (wxhxd)
KV-25K5U: Approx. 612 x 515 x 485 mm
KV-295KU: Approx. 679 x 581 x 526 mm

Weight
KV-25K5U: Approx. 37 kg
KV-29K5U: Approx. 49.5 kg

Accessories supplied
RM-883 Remote Control (1)
IEC designated batteries (2)

Other features
TELETEXT, Fastext

Design and specifications are subject to change without notice.

SECTION 2
DISASSEMBLY

2-1. REAR COVER REMOVAL

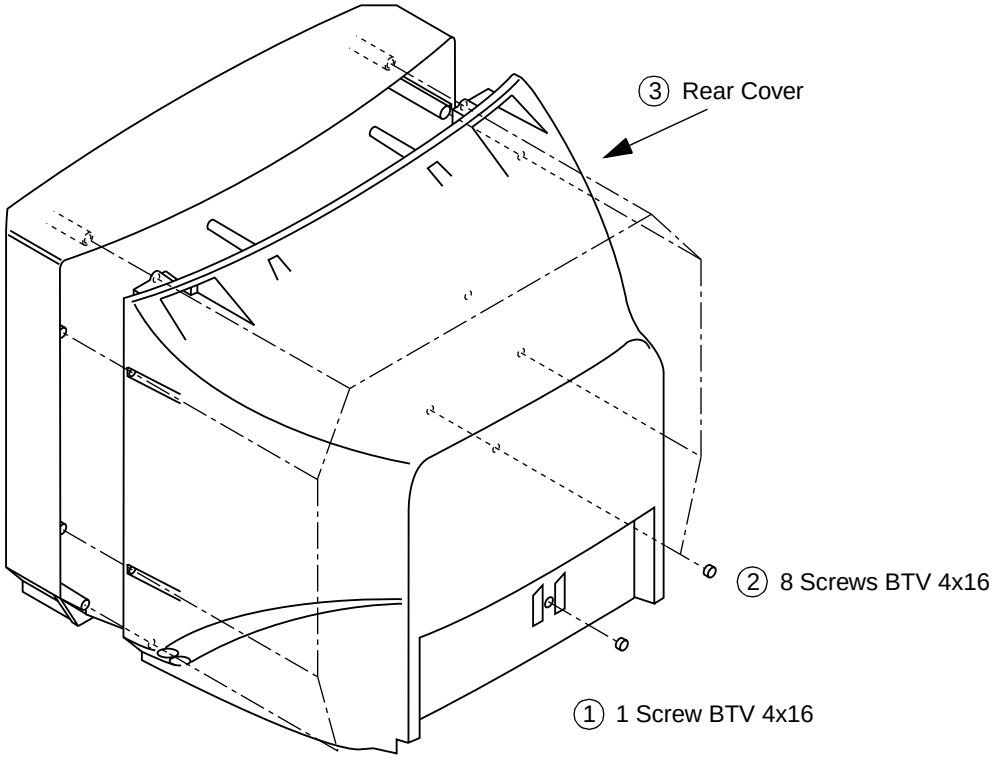

2-2. CHASSIS ASSY REMOVAL

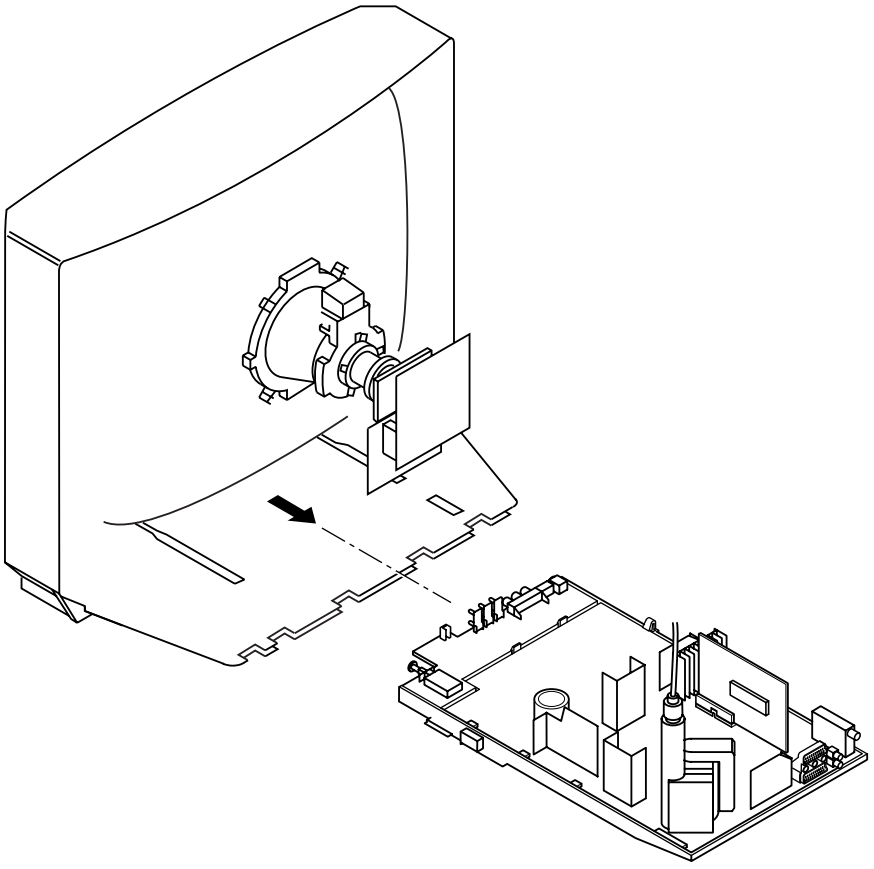

2-3. SERVICE POSITION

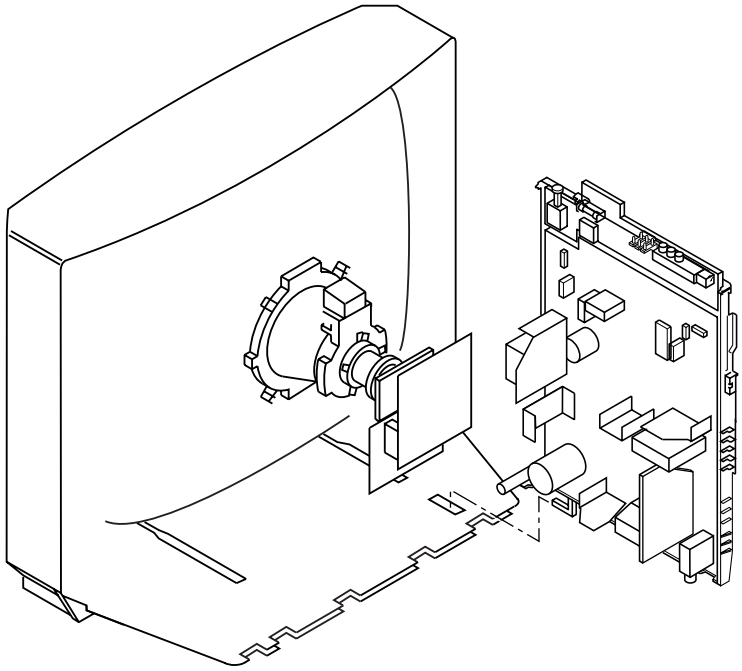

2-4. H1 BOARD REMOVAL

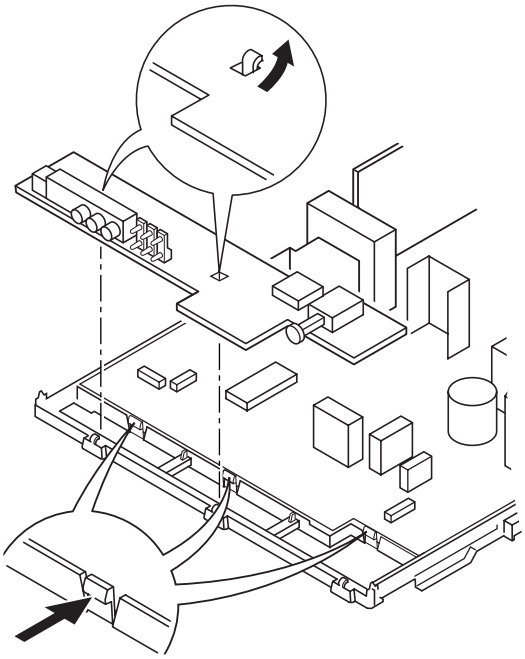

To release, push the claws in the direction of the arrow as indicated.

2-5. S1 BOARD REMOVAL

Release the clip indicated.

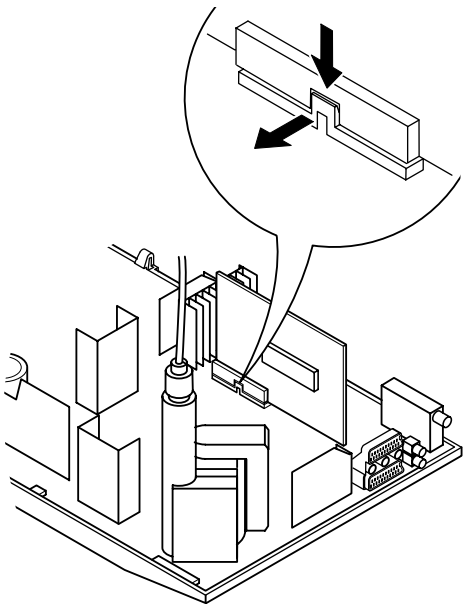

2-6. PICTURE TUBE REMOVAL

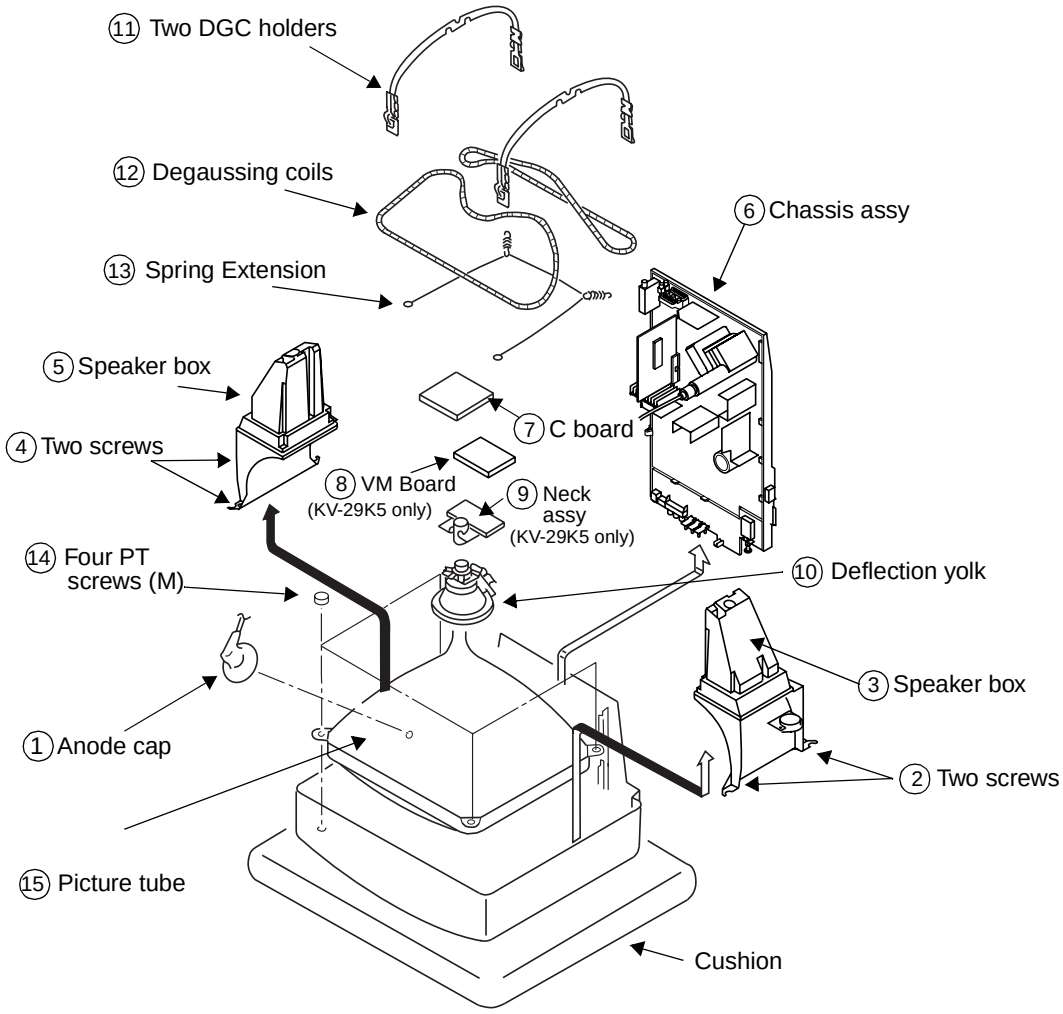

- **REMOVAL OF ANODE-CAP**

Note : Short circuit the anode of the picture tube and the anode cap to the metal chassis, CRT shield or carbon paint on the CRT, after removing the anode.

*** REMOVING PROCEDURES.**

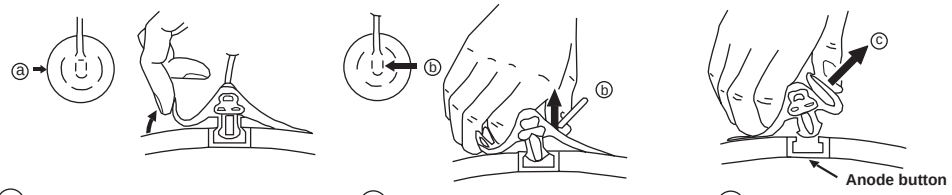

① Turn up one side of the rubber cap in the direction indicated by the arrow ⓐ

② Using a thumb pull up the rubber cap firmly in the direction indicated by the arrow ⓑ

③ When one side of the rubber cap is separated from the anode button, the anode-cap can be removed by turning up the rubber cap and pulling it up in the direction of the arrow ⓒ

- **HOW TO HANDLE THE ANODE-CAP**

① To prevent damaging the surface of the anode-cap do not use sharp materials.
② Do not apply too great a pressure on the rubber, as this may cause damage to the anode connector.
③ A metal fitting called a shatter hook terminal is fitted inside the rubber cap. Do not turn the rubber foot over excessively this may cause damage if the shatter hook sticks out.

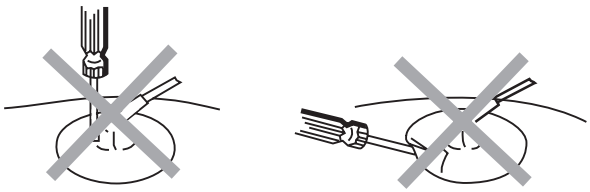

REMOVAL AND REPLACEMENT OF THE MAIN-BRACKET BOTTOM PLATES.

(1) REMOVING THE PLATES

In the event of servicing being required to the solder side of the A Board printed wiring board, the bottom plates fitted to the main chassis bracket require to be removed.
This is performed by cutting the gates with a sharp wire cutter at the locations shown and indicated by arrows.

Note : There are 2 plates fitted to the main bracket and secured by 4 gates.
Only remove the necessary plate to gain access to the printed wiring board.

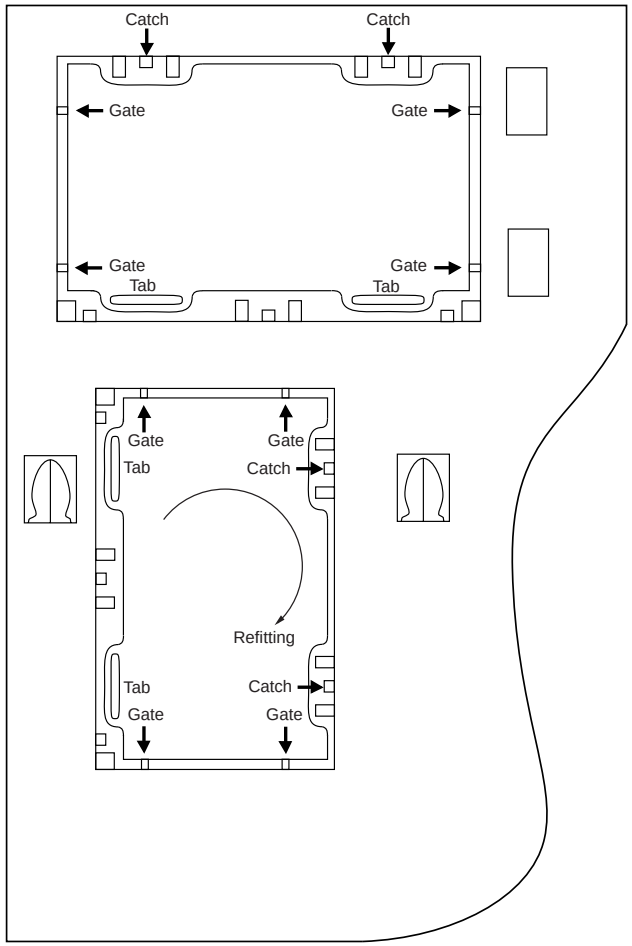

⚠ For safety reasons, on no account should the plates be removed and not refitted after servicing.

(2) REFITTING THE PLATES

Because the plates differ in size it is important that the correct plates are refitted in their original location.

Please note that the plates need to be rotated 180 degrees from the cut position to allow the tabs to be fitted in the catch positions.

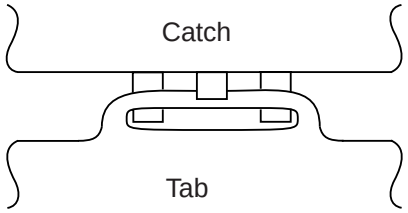

SECTION 3
SET-UP ADJUSTMENTS

- When complete readjustment is necessary or a new picture tube is installed, carry out the following adjustments.
- Unless there are specific instructions to the contrary, carry out these adjustments with the rated power supply.
- Unless there are specific instructions to the contrary, set the controls and switches to the following settings :

Contrast ..... 80% [or remote control normal]

Brightness 50%

Carry out the following adjustments in this order :

3-1. Beam Landing
3-2. Convergence
3-4. Focus
3-3. White balance

Note : Test equipment required
1. Color bar/pattern generator.
2. Degausser.
3. Oscilloscope.
4. Digital multimeter.
5. DC Power supply.

Preparation:

1. In order to reduce the influence of geomagnetism on the set's picture tube, face it in an easterly or westerly direction.
2. Switch on the TV set's power and degauss with the degausser.

3-1. BEAM LANDING

1. Input an all-white signal from the pattern generator. Set the Contrast and Brightness to normal.
2. Set the pattern generator raster signal to all Red.
3. Move the deflection yolk forward and adjust with the purity control so that the Red is at the centre and the Blue and Green take up equally sized areas on each side of the screen. [See Fig.3-1 - 3-3].
4. Move the deflection yolk forward and adjust so that the entire screen becomes Red. [See Fig.3-1].
5. Switch the raster signal to Blue, then to Green and verify the purity condition.
6. When the position of the deflection yolk has been determined, fasten the deflection yolk with the screws.
7. If the beam does not land correctly in all the corners, use magnets to correct it. [See Fig.3-4].

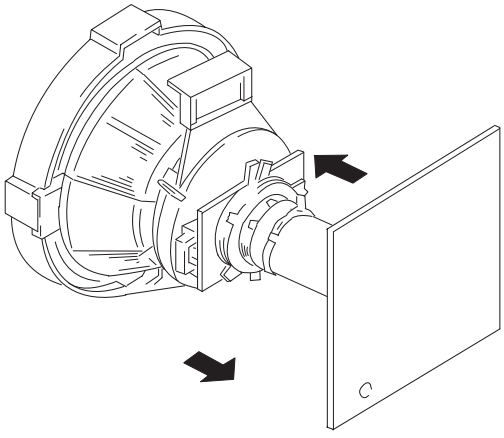

Fig. 3-1

Fig. 3-2

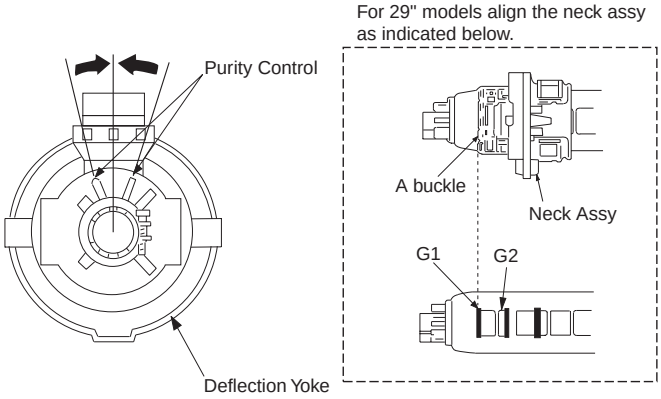

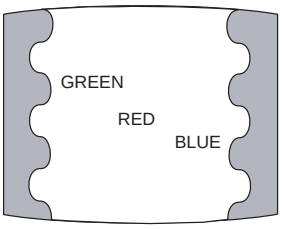

Fig. 3-3

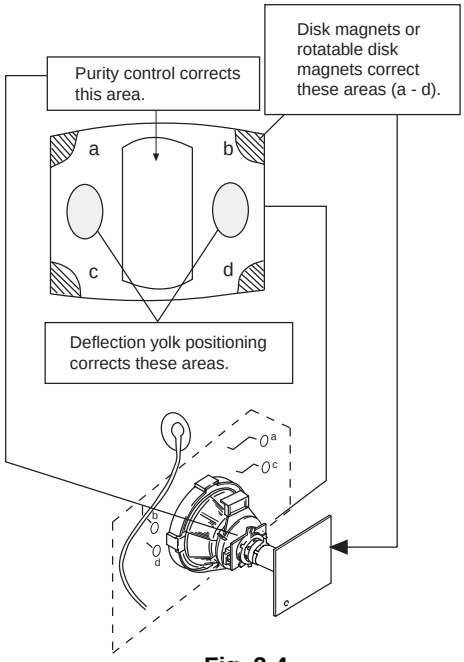

Fig. 3-4

3-2. CONVERGENCE

Preparation:

- Before starting this adjustment, adjust the focus, horizontal size and vertical size.
- Minimize the Brightness setting.
- Input a dot pattern from the pattern generator.

(1) Horizontal and vertical static convergence

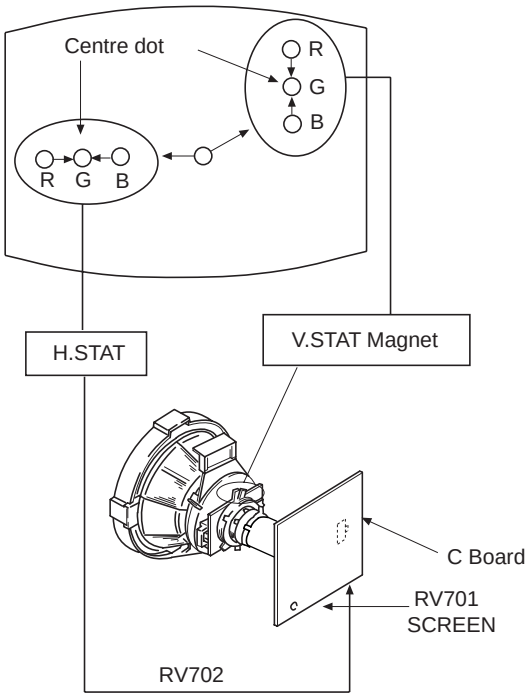

1. [Moving horizontally], adjust the H.STAT control so that the Red, Green and Blue points are on top of each other at the centre of the screen.
2. [Moving vertically], adjust the V.STAT magnet so that the Red, Green and Blue points are on top of each other at the centre of the screen.
3. If the H.STAT variable resistor is unable to bring the Red, Green and Blue points together at the centre of the screen, adjust the horizontal convergence with the H.STAT variable resistor and the V.STAT magnet in the manner indicated below. [In this case, the H.STAT variable resistor and the V.STAT magnet influence each other].

- Tilt the V.STAT magnet and adjust the static convergence by opening or closing the V.STAT magnet.

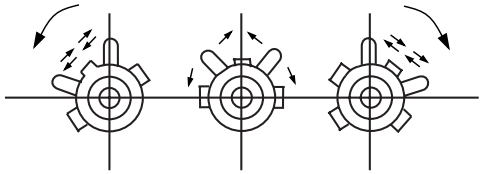

4. If the V.STAT magnet is moved in the direction of the (a) and (b) arrows, the Red, Green and Blue points move as indicated below.

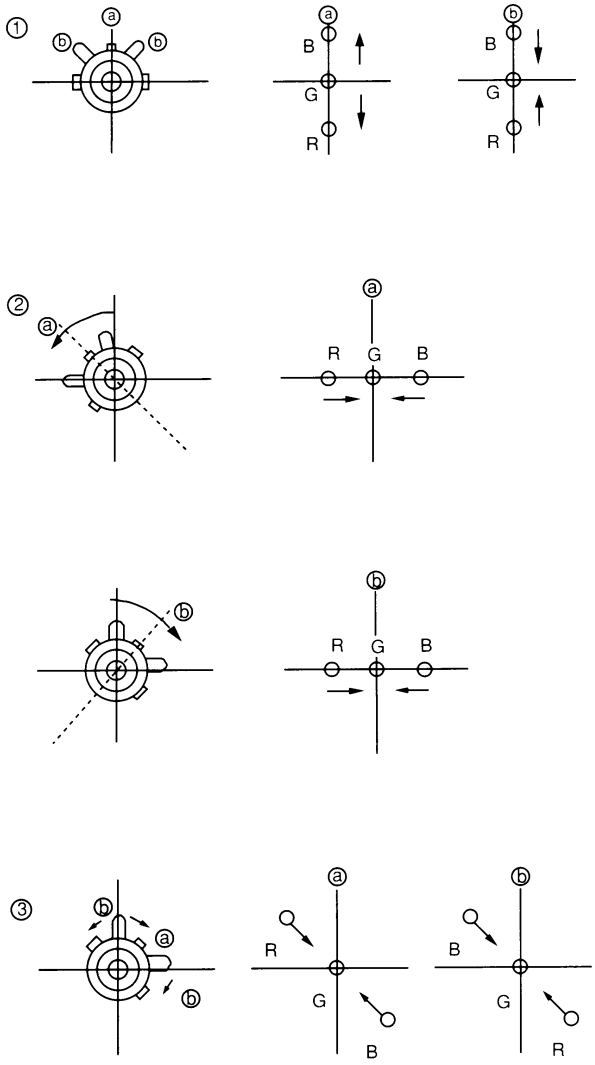

(2) Operation of the BMC (Hexapole) magnet.

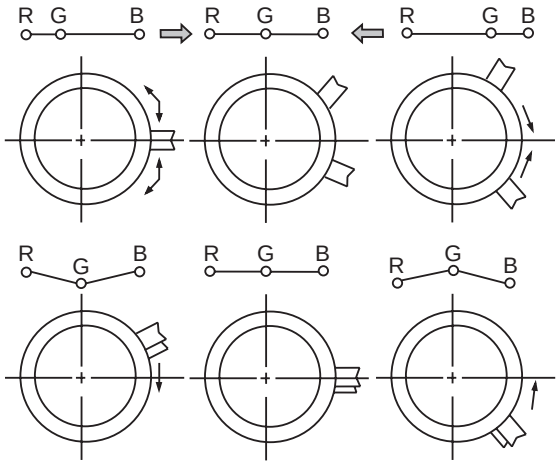

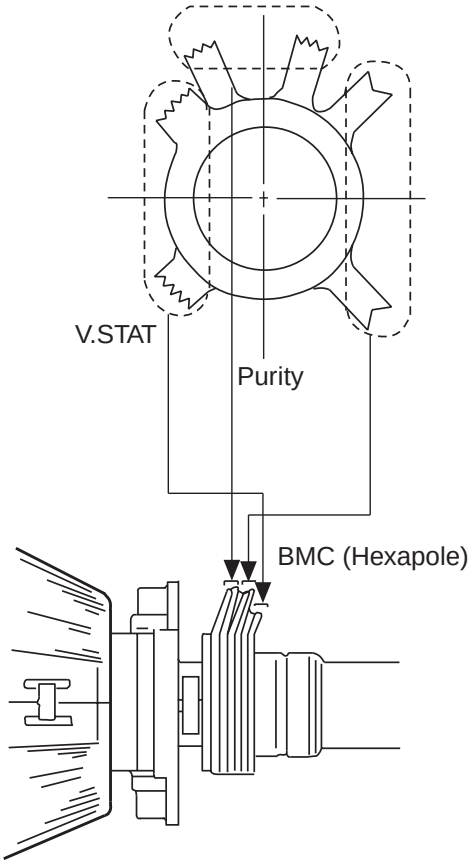

- The respective dot position resulting from moving each magnet interact, so be sure to perform adjustment whilst tracking.
  Use the H.STAT VR to adjust the Red, Green and Blue dots so that they coincide at the centre of the screen
  [by moving the dots in the horizontal direction].

(3) Dynamic convergence adjustment.

Preparation:

- Before starting this adjustment, adjust the horizontal and vertical static convergence.

1. Slightly loosen the deflection yolk screws.
2. Remove the deflection yolk spacer.
3. Move the deflection yolk as indicated in the figure below and optimize the convergence.
4. Tighten the deflection yolk screws.
5. Re-install the deflection yolk spacer.

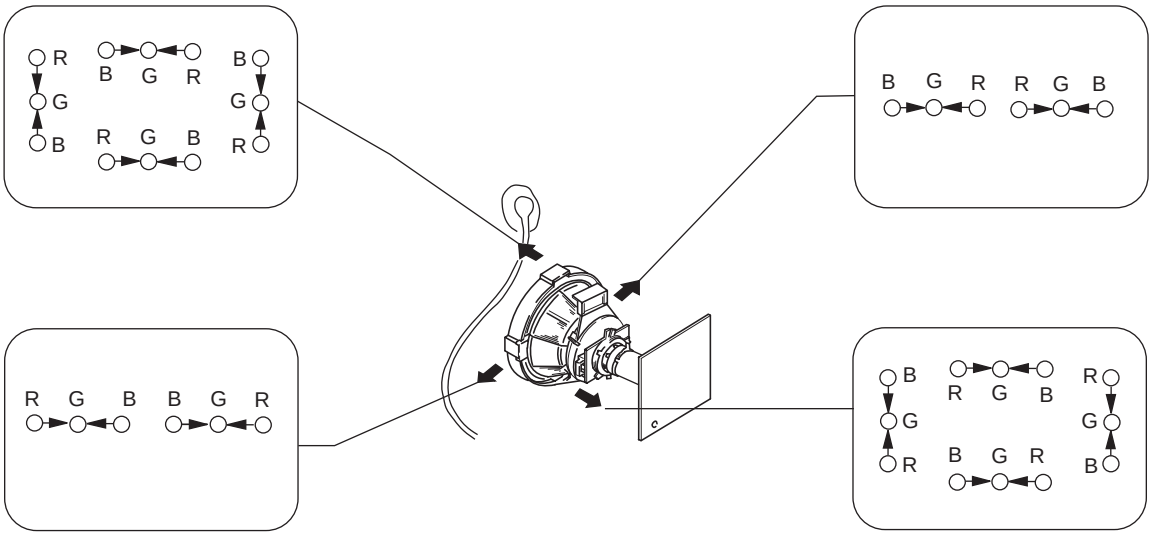

(4) Screen corner convergence.

• If you are unable to adjust the corner convergence properly, this can be corrected by the use of permalloy assemblies.

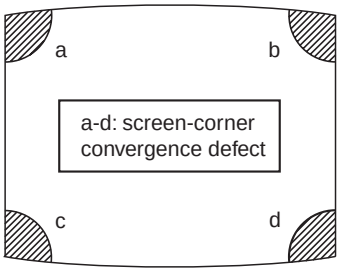

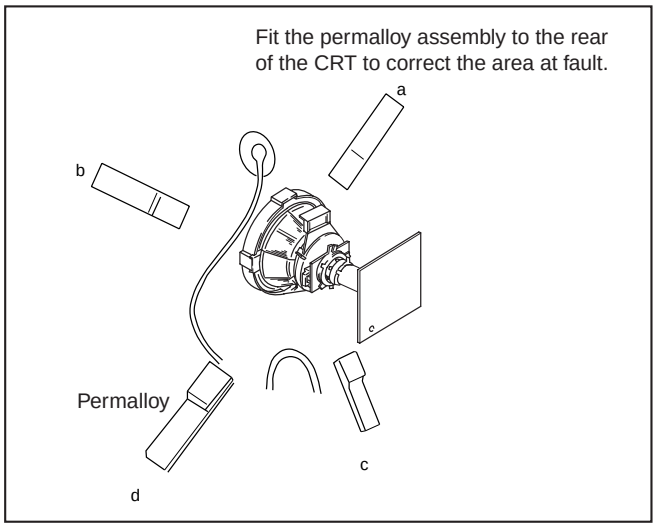

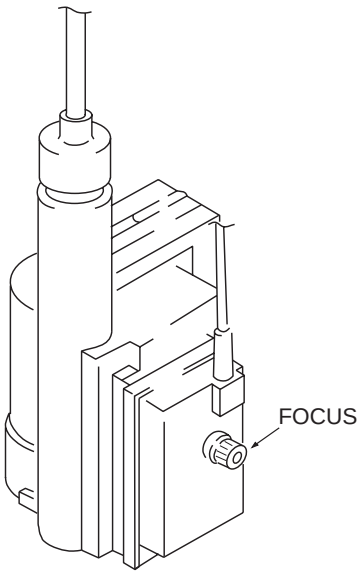

3-3. Screen [G2], White balance

G2 Setting

1. Input a dot signal from the pattern generator.
2. Set the Picture, Brightness and Colour to minimum.
3. Apply 170Vdc from an external power supply to the R, G and B cathodes of the CRT.
4. Whilst watching the picture, adjust the G2 control [RV701 SCREEN] located on the C Board to the point just before the flyback return lines disappear.

White balance adjustment

1. Input a 'PAL' all-white signal from the pattern generator.
2. Enter into the Service Mode.
3. Enter into the 'Picture' service menu.
4. Select the 'Green drive' and adjust so that the White Balance becomes optimum.
5. Select the 'Blue drive' and adjust so that the White Balance becomes optimum.
6. Set the Picture to MIN.
7. Set the 'R-cut-off' to 07.
8. Adjust the 'G-cut-off', and the 'B-cut-off' so that the White Balance becomes optimum.
10. Press the ▭ button to return to TV operation.

PICTURE	
R - Drive	Adj
G - Drive	Adj
B - Drive	Adj
R - cut - off	Adj
G - cut - off	Adj
B - cut - off	Adj
ID - start	02
ID - stop	01
ID - level	01
Bellfo	Adj
Sub Colour	Adj
Sub Brightness	Adj

3-4. FOCUS

1. Input a Phillips colour pattern
2. Set the picture settings to normal.
3. Adjust the focus control located on the Flyback transformer to bring the centre of the screen into focus.

Note :Bring only the centre area of the screen into focus, switch to an all-white pattern and confirm that the magenta ring is hardly noticed. To obtain optimum focus balance the focus setting between optimum screen centre focus and a reduced magenta ring level.

SECTION 4
CIRCUIT ADJUSTMENTS

4-1. ELECTRICAL ADJUSTMENTS

Service adjustments to this model can be performed using the supplied Remote Commander RM-883.

HOW TO ENTER INTO SERVICE MODE

1. Turn on the main power switch and enter into the stand-by mode.
2. Press the following sequence of buttons on the Remote Commander.

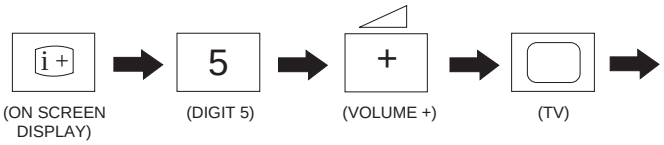

- 'TT--' will appear in the upper right corner of the screen.
  Other status information will also be displayed.

3. Press 'MENU' on the remote commander to obtain the following menu on the screen.

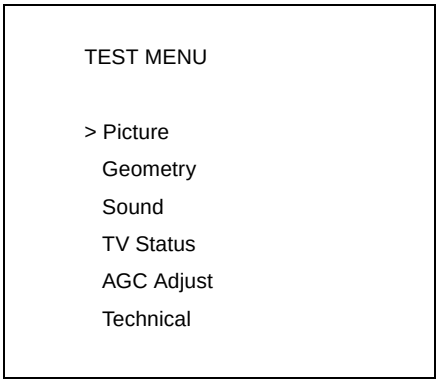

4. Move to the corresponding adjustment item using the 'Green' [up] or 'Blue' [down] buttons on the Remote Commander.
5. Press the 'Yellow' button to enter into the required menu item.
6. Press the 'Menu' button on the Remote Commander to quit the Service Mode when all adjustments have been completed.

Note : The data shown in the 'TV STATUS' table is dependant on destination and country.

PICTURE	
R - Drive	Adj
G - Drive	Adj
B - Drive	Adj
R - cut - off	Adj
G - cut - off	Adj
B - cut - off	Adj
ID - start	02
ID - stop	01
ID - level	01
Bellfo	Adj
Sub Colour	Adj
Sub Brightness	Adj

GEOMETRY	
V centre	Adj
V size	Adj
V Lin	Adj
S Corr	Adj
H Cent	Adj
H Size	Adj
Pin Amp	Adj
Corner Pin	Adj
Pin Phase	Adj
V Bow	Adj
V Angle	Adj
Upper V Lin	Adj
Lower V Lin	Adj
Left HBLK	07
Right HBLK	07
CD Mode (AV)	01

SOUND	
Nicam Error Lower	20
Nicam Error Upper	80
Nicam Error Rate	xx [Status only]
AGC Gain Level	xx [Status only]

TV STATUS	
Destination	A/L/E/U/D/B/K/R
Text Language	East/West

TECHNICAL	
GD - Secam	30
BD - Secam	31
RC - Secam	11
GC - Secam	19
BC - Secam	10
GD - Sports	30
BD - Sports	36
RC - Sports	14
GC - Sports	15
BC - Sports	17
Y - Delay (AV)	07

SUB BRIGHTNESS ADJUSTMENT

1. Input a Phillips colour pattern.
2. Press 'TEST' 'TEST' 13 on the Remote Commander.
3. Adjust the 'Sub-Brightness' data so that there is barely a difference between the 0 IRE and 10 IRE signal levels.

SUB CONTRAST ADJUSTMENT

1. Input a video signal that contains a small 100% white area on a black background
2. Set the picture control to maximum. ['TT01']
3. Connect an oscilloscope to Pin 1 of CN504 [A Board].
4. Enter into the 'Picture' service menu.
5. Adjust the 'R - Drive' data to obtain the following waveform.

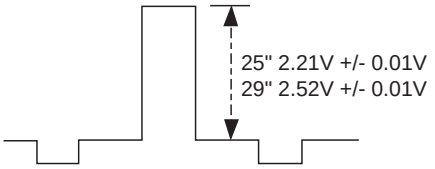

R - out Waveform

SUB COLOUR ADJUSTMENT

1. Receive a PAL colour bar signal.
2. Connect an oscilloscope to Pin 3 of CN504 [A Board].
3. Enter into the 'Picture' service menu.
4. Adjust the 'Sub Colour' data so that the Cyan, Magenta and Blue colour bars are of equal levels as indicated below.

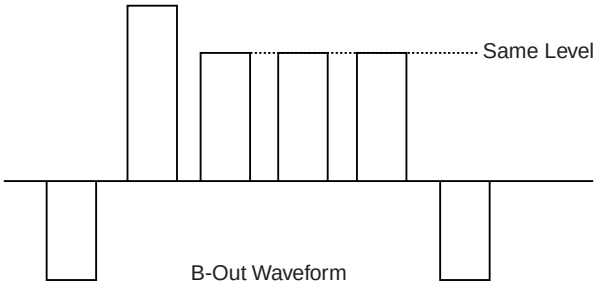

B-Out Waveform

Note: Ensure that no signal is applied to the Antenna socket while carrying out the following IF adjustments.

SYSTEM B/G, D/K, I & L I.F ADJUSTMENT

1. Input a 38.9Mhz carrier signal at 100dBuV to Pin 11 [IF output] of the tuner [TU101].
2. Measure the voltage at Pin 17 of [IC101].
3. Adjust L103 [A Board] to obtain a voltage of 2.5V +/- 0.3V.

SYSTEM L BAND 1 I.F ADJUSTMENT

1. Input a 34.0MHz carrier signal at 100dBuV to Pin 11 [IF output] of the tuner [TU101].
2. Select 'system L' + C00 [channel 00].
3. Measure the voltage at Pin 17 [IC101].
4. Adjust RV101 [A Board] to obtain a voltage of 2.5V +/- 0.3V.

TUNER AGC ADJUSTMENT

1. Receive a signal of 65dBuV / 75 ohm terminated, via the tuner antenna socket.
2. Connect a voltmeter to JW130 [A Board].
3. Enter into the 'Test Menu'.
3. Select the 'AGC Adjust' menu item.
4. Adjust the data using the Yellow and Green buttons on the Remote Commander to obtain a voltage of 3.0V +/- 0.2V.

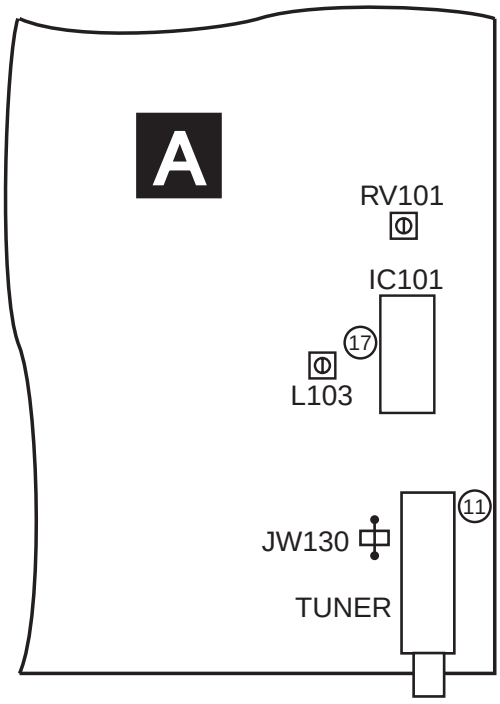

A Board component side

DEFLECTION SYSTEM ADJUSTMENT

1. Enter into the 'Geometry' service menu.
2. Select and adjust each item in order to obtain the optimum image.

GEOMETRY	
V centre	Adj
V size	Adj
V Lin	Adj
S Corr	Adj
H Cent	Adj
H Size	Adj
Pin Amp	Adj
Corner Pin	Adj
Pin Phase	Adj
V Bow	Adj
V Angle	Adj
Upper V Lin	Adj
Lower V Lin	Adj
Left HBLK	07
Right HBLK	07
CD Mode (AV)	01

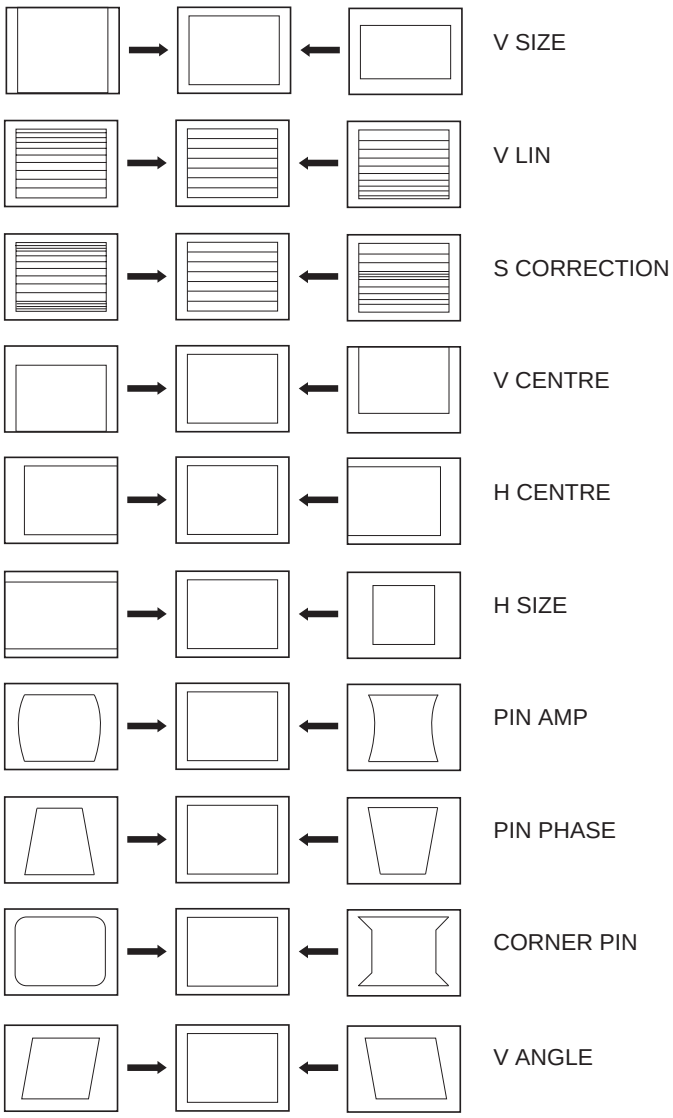

4-2. TEST MODE 2:

Is available by pressing 'TEST' button twice, OSD 'TT' appears. The functions described below are available by pressing the two numbers. To release the Test mode 2, press 0 twice, or switch the TV into stand-by mode, or press the ▭ TV button on the remote commander.

00	Cancel Test mode
01	Picture maximum
02	Picture minimum
03	Volume 35%
04	Volume 50%
05	Volume 65%
06	Volume 80%
07	Ageing mode On/Off
08	Set shipping conditions
09	Display TV Status
10	No function
11	Sub Picture Adjustment
12	Sub Colour Adjustment
13	Sub Brightness Adjustment
14	Text H position Adjustment
15	Rotation test
16	Picture level 50%
17	Audio mute ON
18	Disable Blanking
19	No function
20	No function
21	Destination A
22	Destination L
23	Destination E
24	Destination U
25	Destination D
26	Destination B
27	Destination K
28	Destination R
29	No function
30	No function
31	Audio shutoff Disable/Enable
32	RGB priority Disable/Enable
33	Rotation On/OFF
34	Text language East/West
35	Wide CRT/4:3 CRT
36	VM ON/OFF test
37	No function
38	No function
39	No function
40	No function
41	Re-initialize the NVM [Only when Prog=59]
42	Re-initialise geometry settings [Only when Prog=59]
43	No function
44	No function
45	No function
46	No function
47	No function
48	Set NVM as NON Virgin [Only when Prog=59]
49	Set NVM as Virgin [Only when Prog=59]
50	No function
51	No function
52	No function
53	No function
54	No function
55	No function
56	No function
57	No function
58	No function
59	No function
60	No function
61	Auto AGC Adjust
62	Alternative Dest B Autotuning
63	Enable/Disable Y/C input
64	Signal Quality Check for Auto Tune
65	Signal Quality NOT Checked for Auto Tune
66	No function
67	Manual AGC Adjust
68 -100	No function

4-3. FE-1 SELF DIAGNOSTIC SOFTWARE

The identification of errors within the FE-1 chassis is triggered in one of two ways :- 1: Busy or 2: Device failure to respond to IIC. In the event of one of these situations arising the software will first try to release the bus if busy (Failure to do so will report with continuous flashing LED) and then communicate with each device in turn to establish if a device is faulty. If a device is found to be faulty the relevant device number will be displayed through the LED (Series of flashes which must be counted) See Table 1., non fatal errors are reported using this method.
Each time the software detects an error it is stored within the NVM. See Table 2.

Table 1

ERROR	LED ERROR COUNT
No error	00
Not allowed (may be confused with Sircs response flash!)	01
Protection circuit trip < ANY TIME >	02
Reserved	03
No vertical sync	04
AKB	05
IIC bus clock and/or data lines low at Power ON	06
NVM no IIC bus acknowledge at Power ON	07
Jungle controller no IIC acknowledge at Power ON	08
Tuner no acknowledge at Power ON	09
Sound processor no acknowledge at Power ON	10

Flash Timing Example : e.g. error number 3

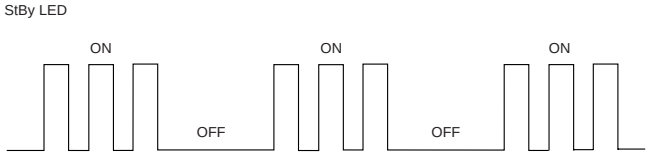

How to enter into Table 2

1. Turn on the main power switch of the TV set and enter into the 'Standby Mode'.
2. Press the following sequence of buttons on the Remote Commander.

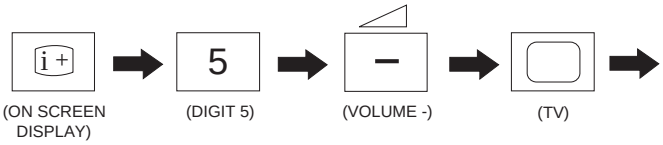

3. The following table will be displayed indicating the error count.

Table 2

Error	Times
2	-
3	-
4	-
5	-
6	-
7	-
8	-
9	-
10	-

Note: To clear the error count data press '80' on the Remote commander.

5-1 BLOCK DIAGRAMS (1)

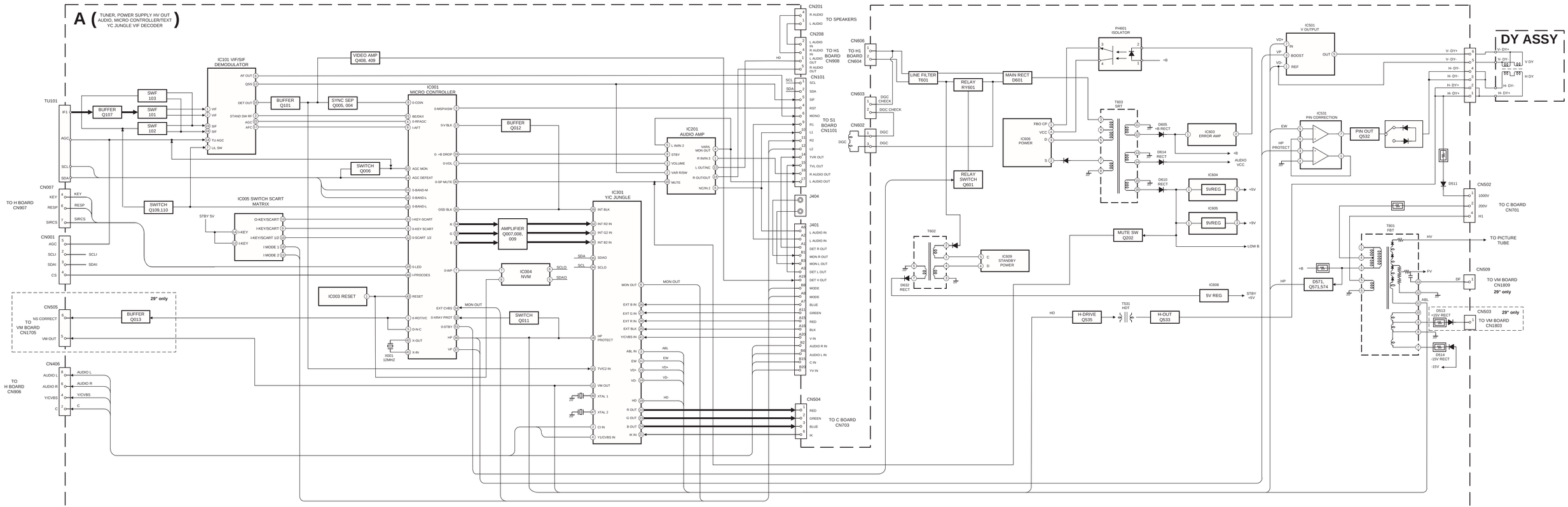

5-1 BLOCK DIAGRAMS (2)

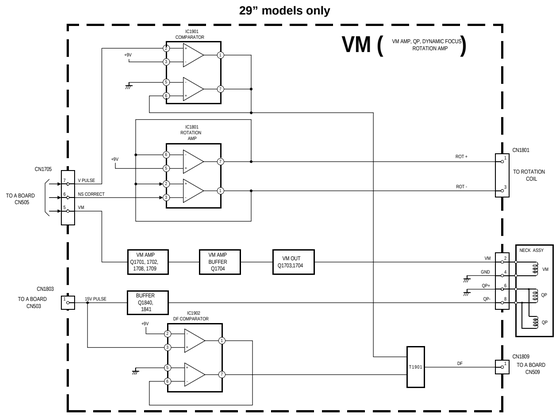

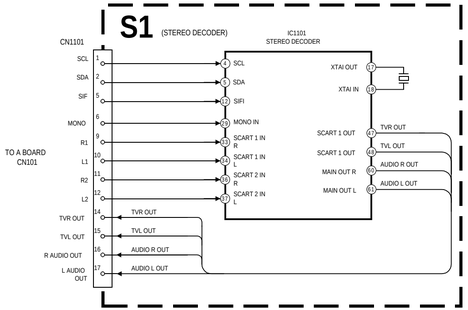

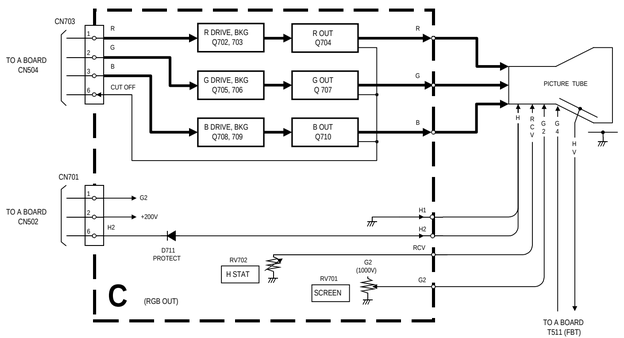

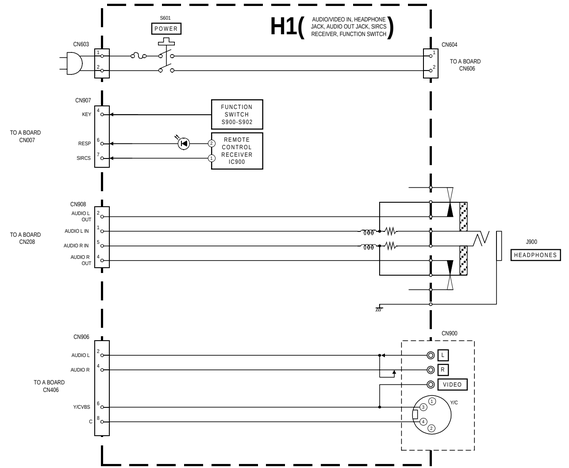

5-2. CIRCUIT BOARD LOCATION

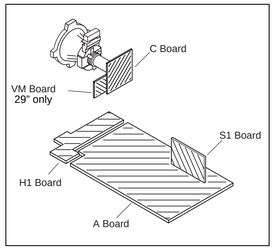

5-3. SCHEMATIC DIAGRAMS AND PRINTED WIRING BOARDS

Note :

- All capacitors are in µF unless otherwise noted.
- pF : µµF 50WV or less are not indicated except for electrolytic types.
- Indication of resistance, which does not have one for rating electrical power, is as follows.

Pitch : 5mm
Electrical power rating : 1/4W

- Chip resistors are 1/10W
- All resistors are in ohms.
  k = 1000 ohms, M = 1000,000 ohms
- : nonflammable resistor.
- : fusible resistor.
- : internal component.
- : panel designation or adjustment for repair.
- All variable and adjustable resistors have characteristic curve B, unless otherwise noted.
- All voltages are in Volts.
- Readings are taken with a 10Mohm digital mutimeter.
- Readings are taken with a color bar input signal.
- Voltage variations may be noted due to normal production tolerances.
- : B + bus.
- : B - bus.
- : RF signal path.
- : earth - ground.
- : earth - chassis.

Reference Information

RESISTOR	**RN**	: METAL FILM
	RC	: SOLID
	FPRD	: NON FLAMMABLE CARBON
	FUSE	: NON FLAMMABLE FUSIBLE
	RS	: NON FLAMMABLE METAL OXIDE
	RB	: NON FLAMMABLE CEMENT
	RW	: NON FLAMMABLE WIREWOUND
	※	: ADJUSTMENT RESISTOR
COIL	**LF-8L**	: MICRO INDUCTOR
CAPACITOR	**TA**	: TANTALUM
	PS	: STYROL
	PP	: POLYPROPYLENE
	PT	: MYLAR
	MPS	: METALIZED POLYESTER
	MPP	: METALIZED POLYPROPYLENE
	ALB	: BIPOLAR
	ALT	: HIGH TEMPERATURE
	ALR	: HIGH RIPPLE

Note: The components identified by shading and marked ⚠ are critical for safety Replace only with the part numbers specified in the parts list.

Note: Les composants identifies par une trame et par une marque ⚠ sont d'une importance critique pour le securite. Ne les remplacer que par des pieces de numero specifie.

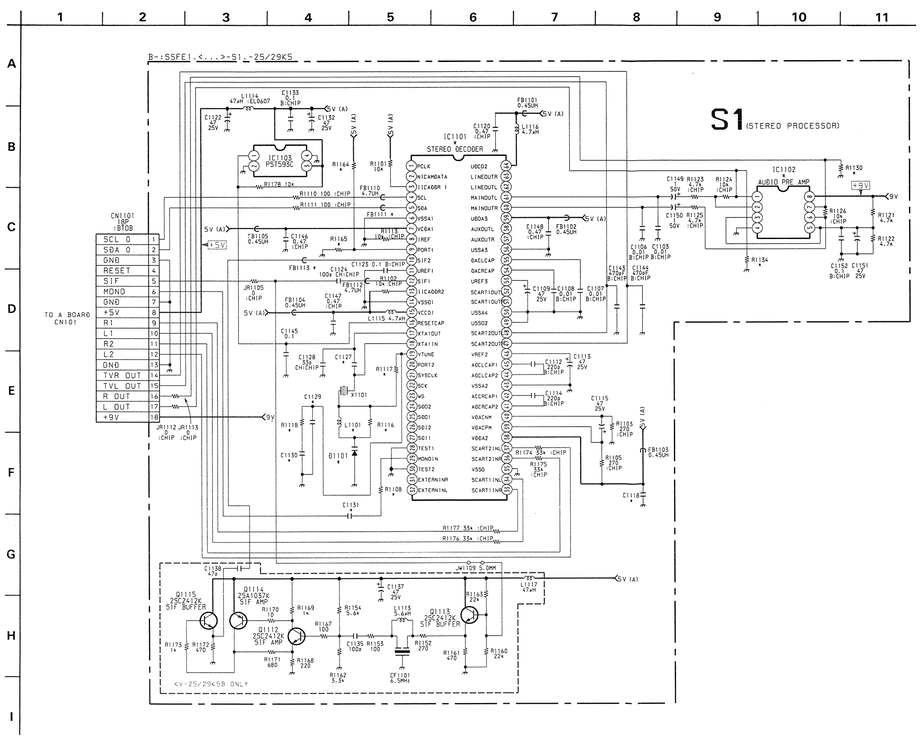

S1 [STEREO PROCESSOR]

S1 Board < Conductor Side >

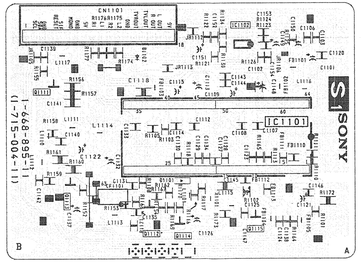

S1 Board < Component Side >

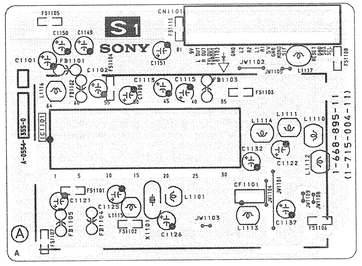

S1 BOARD IC VOLTAGE TABLE

IC Voltage Table		
Ref No	Pin No	Voltage (V)
IC1101	4	3.4
	5	3.2
	7	4.8
	8	2.3
	9	4.8
	10 - 12	2.3
	13	4.8
	15	4.8
	16	4.8
	17	2.6
	18	3.5
	19	4.0
	33 - 34	2.4
	36 - 37	2.4
	38 - 39	4.8
	41 - 42	2.4
	44 - 48	2.4
	53 - 55	2.4
	59	4.8
	60 - 61	2.4
	64	4.8
IC1102	1	4.5
	2	4.1
	3	4.5
	6	4.3
	7	3.5
	8	9.0

S1 BOARD TRANSISTOR VOLTAGE TABLE

Transistor Voltage Table			
Ref No	(B) Base	(C) Collector	(E) Emitter
Q1111	2.0	4.1	1.3
Q1112	1.5	3.5	0.9
Q1113	1.9	4.1	1.3
Q1114	3.5	3.3	4.1
Q1115	3.3	4.1	2.7

S1 BOARD * MARK

Ref	25K5A	25K5B	25K5D	25K5E	25K5U	29K5A	29K5B	29K5D	29K5E	29K5U
C1118	0.47MF 25V	0.47MF 16V	0.47MF 25V	0.47MF 25V	0.47MF 25V	0.47MF 25V	0.47MF 16V	0.47MF 25V	0.47MF 25V	0.47MF 25V
C1127	22P	33P	22P	33P	33P	22P	33P	22P	33P	33P
C1129	-	0.033MF	-	0.033MF	0.033MF	-	0.033MF	-	0.033MF	0.033MF
C1130	-	0.33MF	-	0.33MF	0.33MF	-	0.33MF	-	0.33MF	0.33MF
C1131	0.47MF	0.47MF	0.47MF	-	-	0.47MF	0.47MF	0.47MF	-	-
D1101	0	BB135	0	BB135	BB135	0	BB135	0	BB135	BB135
FB1111	6.8UH	4.7UH	6.8UH	4.7UH	4.7UH	46.8UH	64.7UH	6.8UH	4.7UH	4.7UH
IC1101	TDA9870	TDA9875P	TDA9870	TDA9875P	TDA9875P	TDA9870	TDA9875P	TDA9870	TDA9875P	TDA9875P
IC1102	LM358DR-E2	UPC4558G2	LM358DR-E2	UPC4558G2	UPC4558G2	LM358DR-E2	UPC4558G2	LM358DR-E2	UPC4558G2	UPC4558G2
L1101	-	2.7UH	-	2.7UH	2.7UH	-	2.7UH	-	2.7UH	2.7UH
R1108	2.2K	2.2K	2.2K	-	-	2.2K	2.2K	2.2K	-	-
R1116	0	39K	0	39K	39K	0	39K	0	39K	39K
R1117	-	10K	-	10K	10K	-	10K	-	10K	10K
R1118	-	20K	-	20K	20K	-	20K	-	20K	20K
R1130	10K	-	10K	-	-	10K	-	10K	-	-
R1134	10K	-	10K	-	-	10K	-	10K	-	-
R1164	-	10K	-	10K	10K	-	10K	-	10K	10K
R1165	0	-	0	-	-	0	-	0	-	-
X1101	1-567-970-21	1-567-970-21	1-567-970-21	1-767-813-21	1-767-813-21	1-567-970-21	1-567-970-21	1-567-970-21	1-567-970-21	1-567-970-21

A BOARD

IC		DIODE		D539	F - 2
IC001	C - 11	D001	D - 8	D571	F - 5
IC003	D - 10	D002	D - 8	D601	G - 8
IC004	D - 9	D004	D - 10	D602	I - 6
IC005	B - 11	D007	D - 9	D603	H - 6
IC101	A - 4	D008	D -7	D605	G - 6
IC201	B - 7	D009	C - 11	D608	H - 8
IC301	D - 6	D010	D - 10	D610	F - 7
IC501	I - 4	D011	E - 12	D613	E - 9
IC531	C - 4	D012	D - 11	D614	G - 6
IC603	F - 6	D014	D - 11	D619	I - 8
IC604	E - 6	D015	D - 11	D621	F - 10
IC605	C - 8	D017	E - 10	D626	F - 9
IC606	I - 7	D018	D - 7	D627	F - 9
IC608	D - 12	D023	E - 10	D628	E - 10
IC609	E - 11	D101	B - 2	D629	E - 11
TRANSISTOR		D104	A - 3	D631	F - 11
Q004	B - 9	D201	C - 8	D632	E - 10
Q005	C - 10	D202	C - 8	D633	E - 9
Q006	B - 9	D204	C - 9		
Q007	D - 10	D205	B - 8		
Q008	D - 11	D206	B - 7		
Q009	D - 11	D306	C - 6		
Q010	D - 10	D307	C - 6		
Q011	D - 8	D308	E - 5		
Q012	B - 11	D309	E - 5		
Q013	B - 9	D405	C - 1		
Q101	B - 5	D406	C - 2		
Q107	A - 3	D407	D - 2		
Q109	B - 2	D409	B - 1		
Q110	B - 2	D415	D - 2		
Q111	A - 2	D417	D - 2		
Q112	A - 2	D422	C -1		
Q202	C - 8	D423	C - 1		
Q401	B - 2	D427	B - 2		
Q405	B - 2	D501	I - 4		
Q408	B - 2	D502	H - 4		
Q501	I - 5	D511	G - 3		
Q532	E - 2	D512	H - 3		
Q533	F - 1	D513	I - 3		
Q535	D - 1	D514	I - 3		
Q571	F - 5	D534	D - 3		
Q574	E - 5	D535	F - 4		
Q575	E - 6	D536	F - 2		
Q576	E - 6	D538	F - 4		

A POWER SUPPLY, DEFLECTION, TUNING, PROCESSOR VIDEO SIGNAL PROCESSOR, AV IN/OUT

A Board

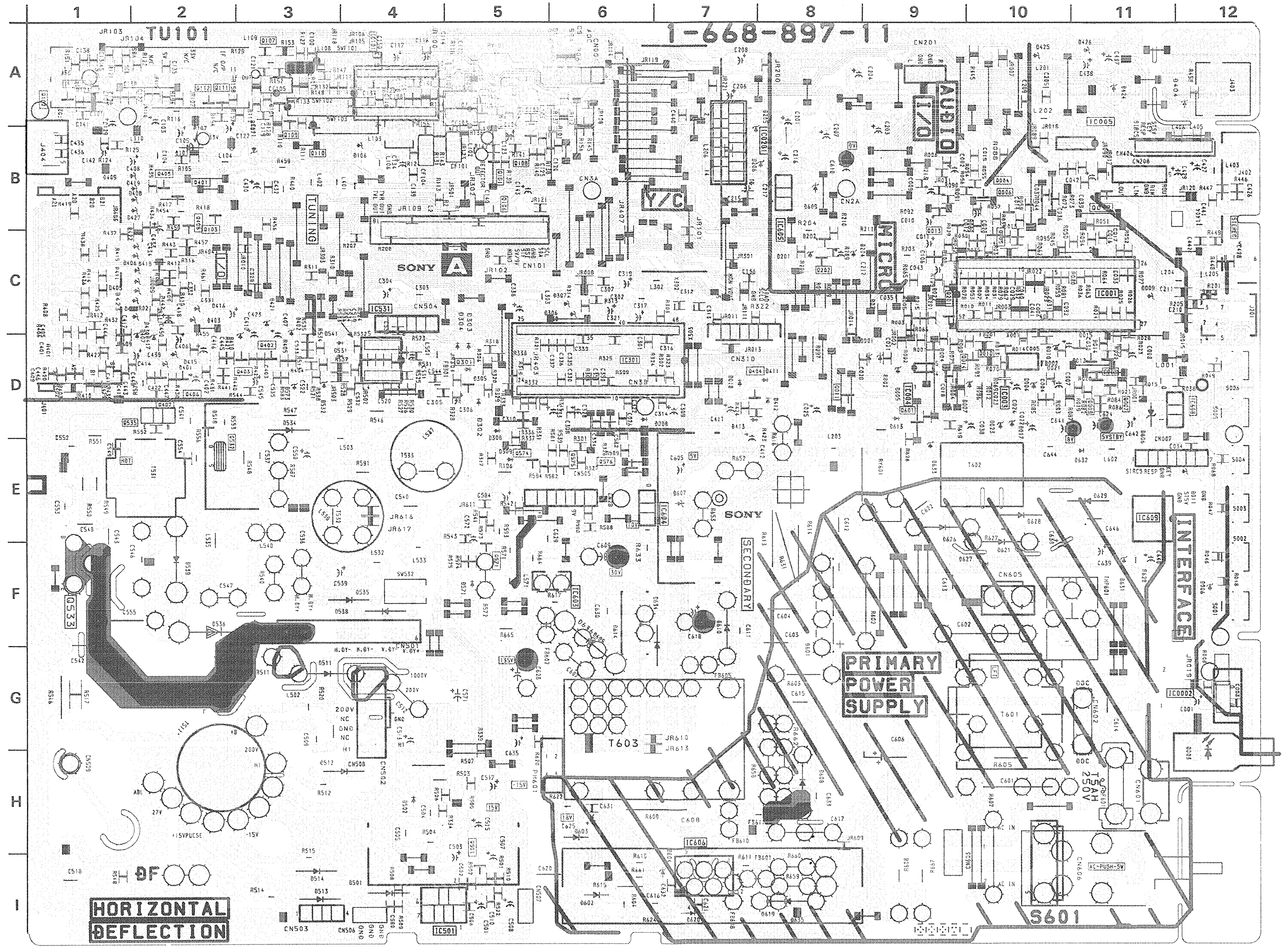

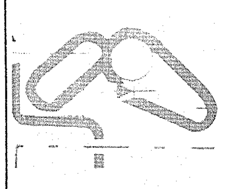

NOTE:
The circuit indicated as left contains high voltage of over 600 Vp-p. Care must be paid to prevent an electric shock in inspection or repairing.

A BOARD TRANSISTOR VOLTAGE TABLE

Transistor Voltage Table			
Ref No	(B) Base	(C) Collector	(E) Emitter
Q004	4.7	0.7	4.9
Q005	0.3	4.8	-
Q006	-	2.0	-
Q007	-	4.9	-
Q008	-	4.9	-
Q009	-	4.9	-
Q010	0.6	-	-
Q011	0.5	-	-
Q012	-	4.8	-
Q101	2.0	-	2.6
Q109	-	4.7	-
Q110	4.3	-	-
Q111	2.3	2.9	2.9
Q112	2.9	-	-
Q202	0.6	-	-
Q401	8.0	3.4	8.6
Q405	4.4	8.8	3.7
Q408	2.6	8.0	2.0
Q532	7.3	3.1	-
Q533	-0.2	-152.0	-
Q535	-0.7	92.0	-
Q571	134.2	-	134.4
Q574	-	2.0	-
Q576	3.4	6.7	2.8
Q601	4.0	3.6	4.8

A BOARD IC VOLTAGE TABLE

IC Voltage Table								
Ref No	Pin No	Voltage (V)	Ref No	Pin No	Voltage (V)	Ref No	Pin No	Voltage (V)
IC001	4	0.8	IC101	1 - 2	3.2	IC301	34 - 35	3.3
	6	3.2		3	4.8		41	5.0
	7 - 8	4.8		4	3.0		42	8.6
	9	0.3		5	2.8		43	5.0
	10	2.0		6	2.7		44	8.8
	11	1.5		7	3.9		45	5.2
	12	4.7		8	2.2		48	1.5
	19	3.6		12	2.0	IC201	1	15.3
	20	4.3		15	1.5		5	15.3
	21	4.8		17	0.3		7	15.3
	24	2.5		18 - 19	2.6		10	4.5
	25	2.1		21	4.7		12	15.3
	26	2.4		22	0.9		13	31.2
	30	4.8		23 - 24	3.2		14	15.3
	31	5.0	IC301	1	3.3	IC501	1	1.4
	36	0.2		2	5.0		2	14.0
	37	0.1		3	4.3		3	-13.0
	38 - 39	5.0		4	5.0		4	-14.0
	41 - 42	2.2		6	4.4		5	0.2
	44	4.8		8	4.5		6	14.5
	45	2.8		11	3.9		7	1.4
	47	0.1		12	2.4	IC531	1	1.6
	48	2.4		13	3.5		2	1.7
	49	3.3		14	3.4		3	1.9
	50	3.1		15	5.6		5	2.8
	51	0.1		16	7.6		6	2.0
IC004	5 - 6	4.8		18	1.3		7	7.3
	7	3.3		19	2.4		8	8.8
	8	3.2		20	3.8	IC606	1 - 2	-60.0
IC005	9	3.2		21	1.6		4	-51.3
	10	4.7		22 - 24	1.5	IC609	4	-58.0
	12	4.7		26 - 28	4.5			
	13	1.5		30	4.5			
	14	4.7		31 - 32	4.4			
	16	4.7		33	8.1			

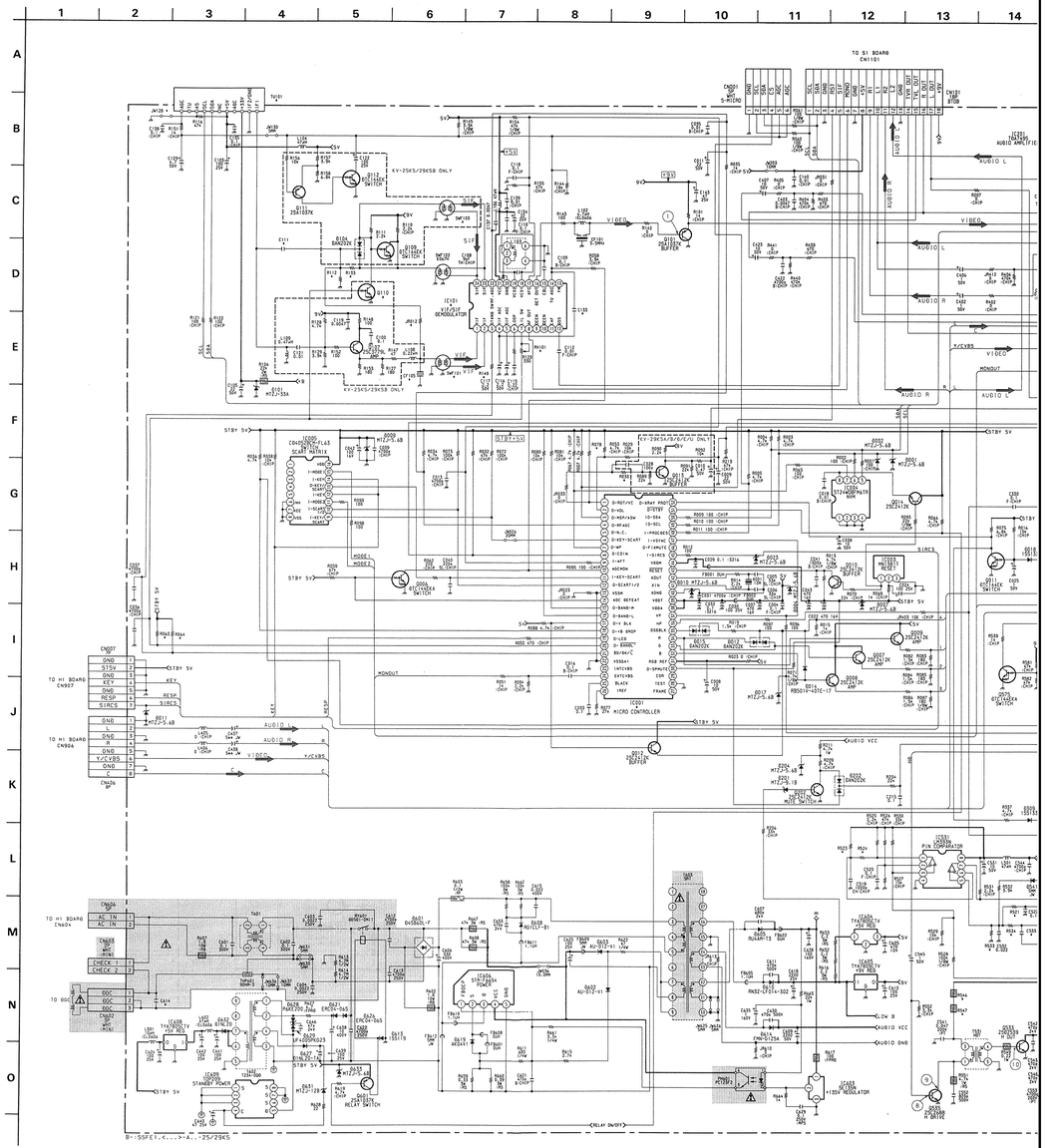

H1 AC SWITCH, CONTROL SWITCH,
AUDIO IN, Y/C IN, HEADPHONE IN,
SIRCS RECIEVER, SIRCS INDICATOR

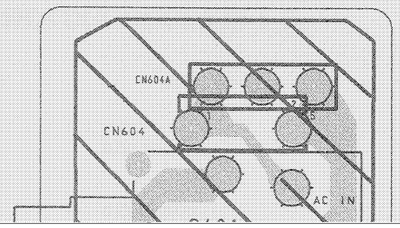

WAVEFORMS A BOARD

① PAL 1.0 Vp-p (H)	① SECAM 1.3 Vp-p (H)	② PAL 1.0 Vp-p (H)	② SECAM 1.3 Vp-p (H)	③ 2.6 Vp-p (H)
④ 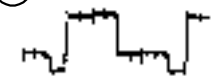 2.6 Vp-p (H)	⑤ 0.5 Vp-p (H)	⑥ 5.0 Vp-p (H)	⑦ 1.4 Vp-p (H)	⑧ 2.0 Vp-p (H)
⑨ 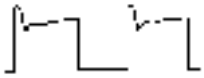 146 Vp-p (V)	⑩ 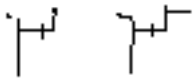 12 Vp-p (H)	⑪ 142 Vp-p (H)	⑫ 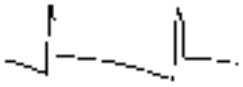 56 Vp-p (V)	⑬ 290 Vp-p (H)
⑭ 1.1KVp-p (H)	⑮ PAL 2.4 Vp-p (H)	⑮ SECAM 3.0 Vp-p (H)		

WAVEFORMS C BOARD

① 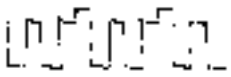 102 Vp-p (H)	② 95 Vp-p (H)
③ 93 Vp-p (H)	④ 24 Vp-p (H)

5-4 SEMICONDUCTORS

CD4052BCM

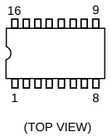

LM358DR-EZ
NJM4558M-TE2
NJM2903D

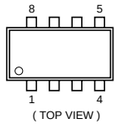

LM393P
TDA2822M
TEA2124

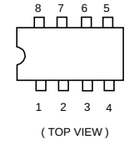

SAA5497PS/MIA/038
SAA5497PS/MIA/039
SAA5497PS/MIA040

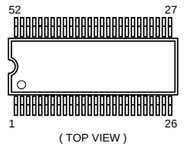

SBX1981-51

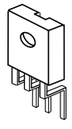

SE-135N
SE135N-LF12

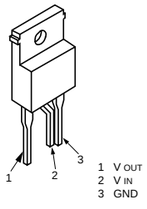

STR-F6654

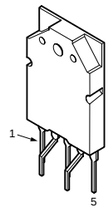

STV9379

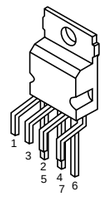

ST24W08FM6TR

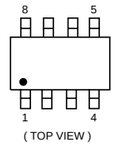

TDA7495

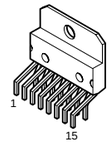

TDA9818-V1
TDA9817-V1

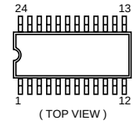

TDA9875
TDA9870

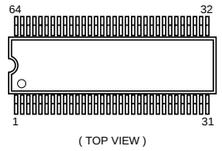

TOP209P

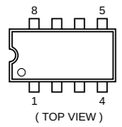

TYA7805CTV
TYA7809CTV

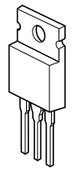

BF421-AMMO
2SA1091-O

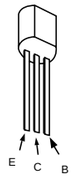

2SC688-LK

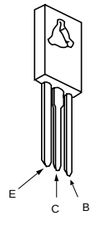

2SA1837

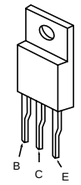

2SC4793

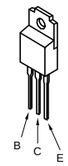

DTA144ESA
DTA144ESA-TP
DTC114EK
DTC114EKA-T146
DTC143TKA-T146
DTC144EKA-T-146R
2SA1037K-T-146-
R2SA1162-G
2SC2412K-QR
2SC2412K-T-146-R

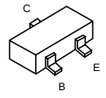

IRF614

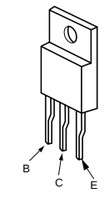

2SA933AS-QRT
2SA933AS-RT
2SC1740S-RT

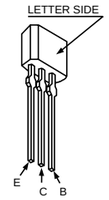

2SK2251-01-F19

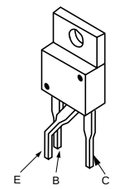

AK04-V1
AU-012-V1
BYD33G
BYD33G-AMMO
DINL20-TR
ERB44-06TP1
EG-1Z-V1
EL1Z
ERD28-06S
ERD28-08S
ERC06-15
FMN-G12S
RG1CLF-B1
RGP10GPKG23
RU3YX-LF-C4
RU3YX-V1
RU-4AM-T3
1SS292T-77

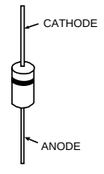

DAN202K
DAN202K-T146

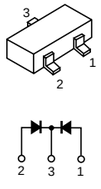

ERA81-004TP1
ERA83-006
MTZJ-T-77-3.9B
MTZJ-T-77-5.6B
MTZJ-T-77-5.6C
MTZJ-T-77-6.8A
MTZJ-T-77-6.8C
MTZJ-T-77-7.5C
MTZJ-T-77-9.1A
MTZJ-T-77-9.1A
MTZJ-T-77-10
MTZJ-T-77-33A
MTZJ-33C
MTZJ-7.5B
RD3.9ES-B2
RD5.6ESB2
RD6.8ES-B2
RD7.5ESB2
RD9.1ES-B3
1SS119-25TD
1SS133T-77

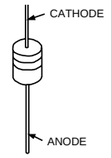

SEL12108-D

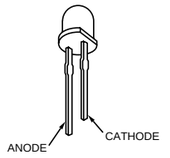

UF4005PK623

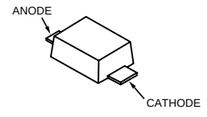

5-5. IC BLOCK DIAGRAMS

A BOARD IC501 STV 9379

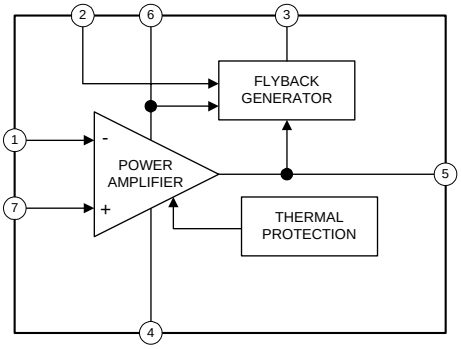

A BOARD IC201 TDA7495

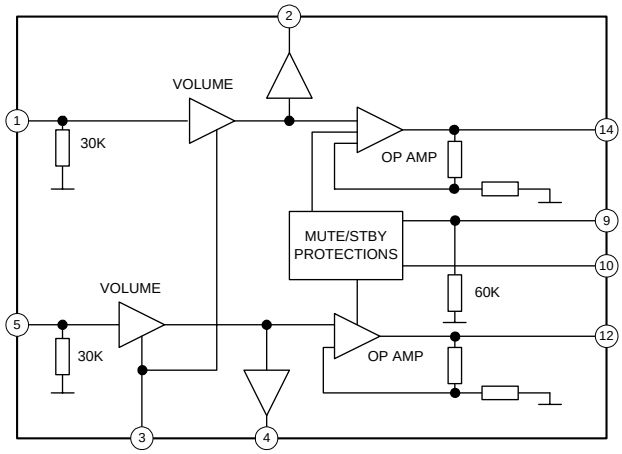

A BOARD IC101 TDA9817/V1

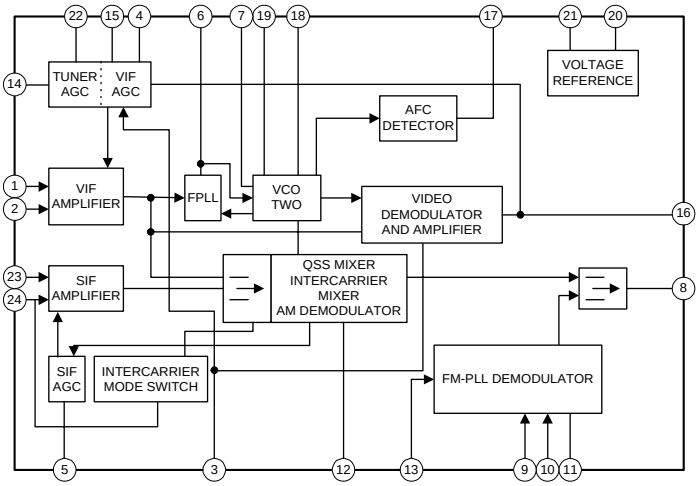

A BOARD IC606 STR-F6654

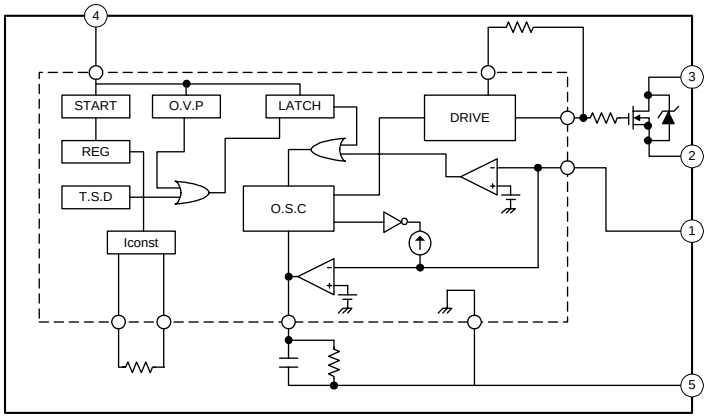

A BOARD IC301 CXA2060AS

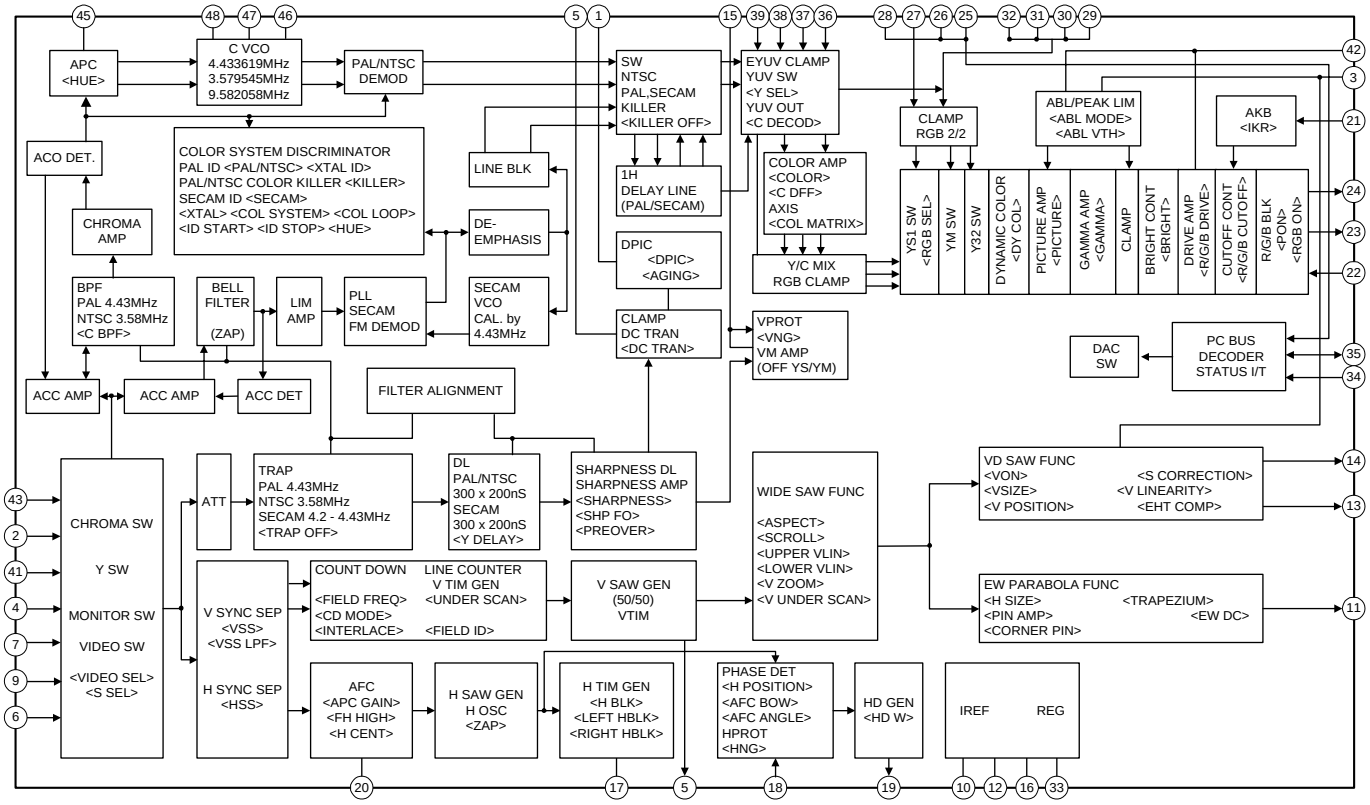

SECTION 6
EXPLODED VIEWS

Note : Les composants indentifies par une trame et par une marque ⚠ sonte d'une importance critique pour la securite. Ne les remplacer que par des pieces du numero specifie.

Note : The components identified by shading and marked ⚠ are critical for safety. Replace only with the part numbers specified in the parts list.

NOTE :

- Items with no part number and no description are not stocked because they are seldom required for routine service.
- The construction parts of an assembled part are indicated with a collation number in the remarks column.
- Items marked " * " are not stocked since they are seldom required for routine service. Some delay should be anticipated when ordering these items.

6-1. CHASSIS

■ 7-685-663-79 x 1
● 7-685-663-71 x 8

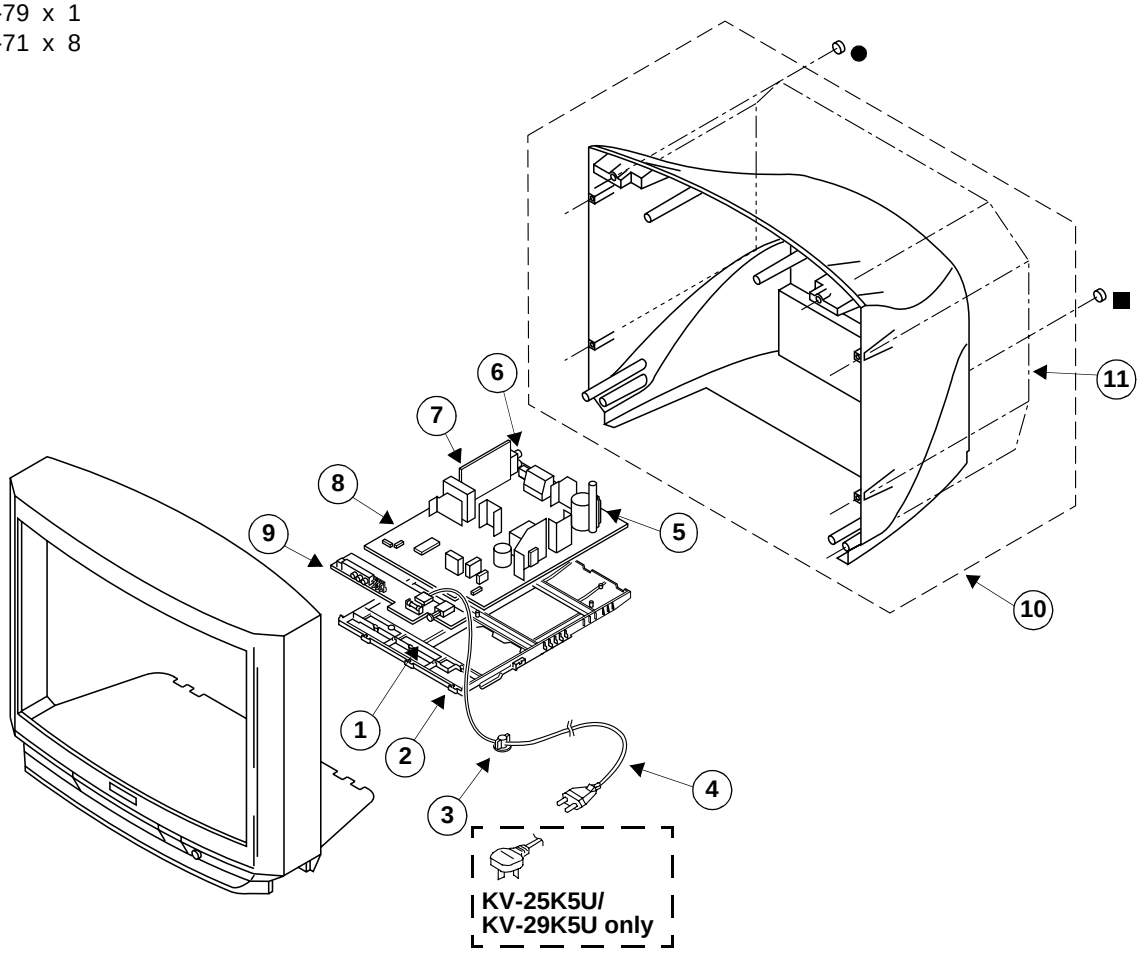

REF. NO.		PART.NO	DESCRIPTION	REMARK
1	⚠	1-571-433-21	SWITCH, PUSH (AC POWER)	
2		*4-204-141-01	BRACKET, MAIN	
3		*4-202-531-01	AC CORD LOCK (SC)	
4	⚠	1-765-286-11	CORD, POWER (KV-25K5A/25K5B/25K5D/25K5E/29K5A/29K5B/29K5D/29K5E)	
	⚠	1-776-204-11	CORD, POWER (FILTER) (KV-25K5U/29K5U)	
5	⚠	1-453-264-11	TRANSFORMER ASSY, FLYBACK (NX-1680/U2B4) (KV-25K5A/25K5B/25K5D/25K5E/25K5U)	
	⚠	1-453-265-11	TRANSFORMER ASSY, FLYBACK (NX-1681/U2B4) (KV-29K5A/29K5B/29K5D/29K5E/29K5U)	
6		1-693-418-11	TUNER (TELE9-001A) (KV-25K5A/25K5B/25K5D/25K5E/29K5A/29K5B/29K5D/29K5E)	
		8-598-464-00	TUNER (FSS-BTP-AU611) (KV-25K5U/29K5U)	
7		*A-1652-055-A	S1 BOARD, COMPLETE (KV-25K5A/25K5D/29K5A/29K5D)	
		*A-1652-059-A	S1 BOARD, COMPLETE (KV-25K5B/29K5B)	
		*A-1652-054-A	S1 BOARD, COMPLETE (KV-25K5E/25K5U/29K5E/29K5U)	
8		*A-1632-740-A	A BOARD, COMPLETE (KV-25K5A)	
		*A-1632-738-A	A BOARD, COMPLETE (KV-25K5B)	
		*A-1632-739-A	A BOARD, COMPLETE (KV-25K5D)	
		*A-1632-737-A	A BOARD, COMPLETE (KV-25K5E)	
		*A-1632-736-A	A BOARD, COMPLETE (KV-25K5U)	
		*A-1632-735-A	A BOARD, COMPLETE (KV-29K5A)	
		*A-1632-734-A	A BOARD, COMPLETE (KV-29K5B)	
		*A-1632-733-A	A BOARD, COMPLETE (KV-29K5D)	
		*A-1632-732-A	A BOARD, COMPLETE (KV-29K5E)	
		*A-1632-731-A	A BOARD, COMPLETE (KV-29K5U)	
9		*A-1646-160-A	H1 BOARD, COMPLETE	
10		X-4200-307-3	COVER ASSY, REAR (KV-25K5A/25K5B/25K5D/25K5E/25K5U)	
		X-4200-304-2	COVER ASSY, REAR (KV-29K5A/29K5B/29K5D/29K5E/29K5U)	
11		4-203-713-11	COVER REAR (KV-25K5A/25K5B/25K5D/25K5E/25K5U)	
		4-203-705-11	COVER, REAR (KV-29K5A/29K5B/29K5D/29K5E/29K5U)	

6-2. PICTURE TUBE

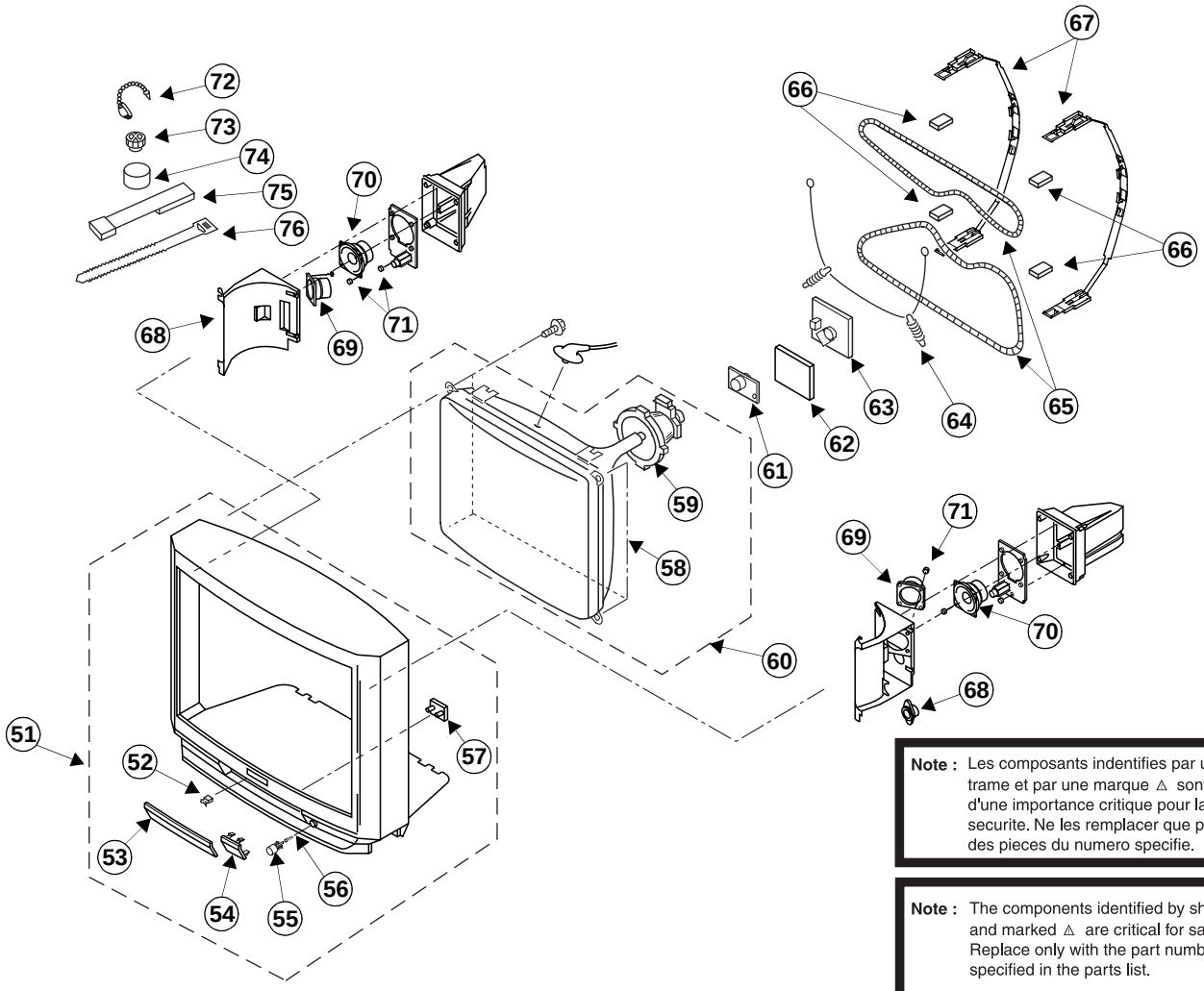

Note : Les composants indentifies par une trame et par une marque ⚠ sonte d'une importance critique pour la securite. Ne les remplacer que par des pieces du numero specifie.

Note : The components identified by shading and marked ⚠ are critical for safety. Replace only with the part numbers specified in the parts list.

REF. NO.		PART.NO	DESCRIPTION	REMARK
51		X-4200-306-5	BEZNET ASSY	52-57
			(KV-25K5A/25K5B/25K5D/25K5E/25K5U)	
51		X-4200-305-7	BEZNET ASSY	
			(KV-29K5A/29K5B/29K5D/29K5E/25K5U)	
52		4-047-464-01	CATCHER PUSH	
53		4-203-693-11	DOOR, ORNAMENTAL (KV-29K5A)	
		4-203-693-21	DOOR, CONTROL (KV-25K5B/25K5E/25K5U/ 29K5B/29K5E/29K5U)	
		4-203-693-31	DOOR, CONTROL (KV-25K5A/25K5D/29K5D)	
		4-203-693-31	DOOR, CONTROL (KV-25K5A/25K5D/29K5D)	
54		4-204-071-01	PLATE, ORNAMENTAL	
55		4-203-704-01	BUTTON POWER	
56		4-202-964-01	SPRING	
57		4-204-070-01	GUIDE, LIGHT	
58	⚠	8-733-254-05	PICTURE TUBE (SD-257) (M60LCS60X)	
			(KV-25K5A/25K5B/25K5D/25K5E/25K5U)	
	⚠	8-733-856-05	PICTURE TUBE (SD-269) (M68LCT60X)	
			(KV-29K5A/29K5B/29K5D/29K5E/29K5U)	
59	⚠	8-451-404-23	DEFLECTION YOKE (Y25GXABA)	
			(KV-25K5A/25K5B/25K5D/25K5E/25K5U)	
	⚠	8-451-466-11	DEFLECTION YOKE (Y29GXC2B)	
			(KV-29K5A/29K5B/29K5D/29K5E/29K5U)	
60	⚠	8-733-254-76	ITC (KV-25K5A/25K5B/25K5D/25K5E/25K5U)	
	⚠	8-733-856-75	ITC (KV-29K5A/29K5B/29K5D/29K5E/29K5U)	

REF. NO.		PART.NO	DESCRIPTION	REMARK
61	⚠	8-453-005-21	NECK ASSY PICTURE TUBE (NA297-M2)	
			(KV-29K5A/29K5B/29K5D/29K5E/29K5U)	
62		*A-1644-090-A	VM BOARD, COMPLETE	
			(KV-29K5A/29K5B/29K5D/29K5E/29K5U)	
63		*A-1638-112-A	C BOARD, COMPLETE	
64		4-369-318-31	SPRING, TENSION	
65	⚠	1-416-073-11	COIL, DEMAGNETIZATION	
			(KV-25K5A/25K5B/25K5D/25K5E/25K5U)	
	⚠	1-406-867-11	COIL, DEMAGNETIZATION	
			(KV-29K5A/29K5B/29K5D/29K5E/29K5U)	
66		4-203-390-01	CUSHION, DGC	
67		4-203-877-01	HOLDER, DGC BRACKET 25"	
			(KV-25K5A/25K5B/25K5D/25K5E/25K5U)	
		4-203-878-01	HOLDER, DGC BRACKET 29"	
			(KV-29K5A/29K5B/29K5D/29K5E/29K5U)	
68		1-505-484-11	SPEAKER (2.6CM)	
69		1-505-674-11	SPEAKER MID RANGE (8CM)	
70		1-505-673-11	SPEAKER WOOFER (10CM)	
71		4-039-358-01	SCREW (4X16), (+) BV TAPPING	
72		4-308-870-00	CLIP, LEAD WIRE	
73		1-452-094-00	MAGNET, ROTATABLE DISK; 15MM Ø	
74		1-452-032-00	MAGNET, DISK; 10MM Ø	
75		X-4387-214-1	PERMALLOY ASSY, CORRECTION	
76		3-701-007-00	BAND, BINDING	

SECTION 7
ELECTRICAL PARTS LIST

When indicating parts by reference number, please include the board name.

CAPACITORS MF : mF, PF : mmF

COILS MMH : mH , uH

- Items marked " * " are not stocked since they are seldom required for routine service. Some delay should be anticipated when ordering these items.
- All variable and adjustable resistors have characteristic curve B, unless otherwise noted.
- RESISTORS
- All resistors are in ohms.
- F : nonflammable.

Note : Les composants indentifies par une trame et par une marque ⚠ sonte d'une importance critique pour la securite. Ne les remplacer que par des pieces du numero specifie.

Note : The components identified by shading and marked ⚠ are critical for safety. Replace only with the part numbers specified in the parts list.

A

REF. NO.	PART.NO	DESCRIPTION			REMARK
	*A-1632-740-A	A BOARD, COMPLETE (KV-25K5A)			
		**********			
	*A-1632-738-A	A BOARD, COMPLETE (KV-25K5B)			
		**********			
	*A-1632-739-A	A BOARD, COMPLETE (KV-25K5D)			
		**********			
	*A-1632-737-A	A BOARD, COMPLETE (KV-25K5E)			
		**********			
	*A-1632-736-A	A BOARD, COMPLETE (KV-25K5U)			
		**********			
	*A-1632-735-A	A BOARD, COMPLETE (KV-29K5A)			
		**********			
	*A-1632-734-A	A BOARD, COMPLETE (KV-29K5B)			
		**********			
	*A-1632-733-A	A BOARD, COMPLETE (KV-29K5D)			
		**********			
	*A-1632-732-A	A BOARD, COMPLETE (KV-29K5E)			
		**********			
	*A-1632-731-A	A BOARD, COMPLETE (KV-29K5U)			
		**********			
	4-382-854-11	SCREW (M3X10), P, SW (+)			
		< CAPACITOR >			
C004	1-163-038-00	CERAMIC CHIP	0.1MF		25V
C005	1-163-105-00	CERAMIC CHIP	33PF	5%	50V
C006	1-163-105-00	CERAMIC CHIP	33PF	5%	50V
C007	1-126-935-11	ELECT	470MF	20%	16V
C008	1-126-964-11	ELECT	10MF	20%	50V
C009	1-126-965-11	ELECT	22MF	20%	50V
C010	1-126-959-11	ELECT	0.47MF	20%	50V
			(KV-29K5A/29K5B/29K5D/29K5E/29K5U)		
C011	1-126-965-11	ELECT	22MF	20%	50V
C012	1-126-959-11	ELECT	0.47MF	20%	50V
C013	1-163-017-00	CERAMIC CHIP	0.0047MF	10%	50V
C016	1-164-004-11	CERAMIC CHIP	0.1MF	10%	25V
C018	1-164-232-11	CERAMIC CHIP	0.01MF	10%	50V
C019	1-163-038-00	CERAMIC CHIP	0.1MF		25V
C022	1-126-935-11	ELECT	470MF	20%	16V
C024	1-104-665-11	ELECT	100MF	20%	25V
C025	1-126-960-11	ELECT	1MF	20%	50V
C028	1-163-117-00	CERAMIC CHIP	100PF	5%	50V
			(KV-29K5A/29K5B/29K5D/29K5E/29K5U)		
C029	1-163-077-00	CERAMIC CHIP	0.1MF	10%	25V
C030	1-104-665-11	ELECT	100MF	20%	25V
C031	1-163-017-00	CERAMIC CHIP	0.0047MF	10%	50V
C032	1-163-077-00	CERAMIC CHIP	0.1MF	10%	25V
C033	1-164-004-11	CERAMIC CHIP	0.1MF	10%	25V
C035	1-164-232-11	CERAMIC CHIP	0.01MF	10%	50V
C036	1-163-017-00	CERAMIC CHIP	0.0047MF	10%	50V
C037	1-163-017-00	CERAMIC CHIP	0.0047MF	10%	50V
C038	1-126-964-11	ELECT	10MF	20%	50V
C039	1-163-017-00	CERAMIC CHIP	0.0047MF	10%	50V
C040	1-163-125-00	CERAMIC CHIP	220PF	5%	50V
C041	1-163-205-00	CERAMIC CHIP	0.001MF	10%	50V
C042	1-126-933-11	ELECT	100MF	20%	16V
C043	1-126-935-11	ELECT	470MF	20%	16V
C100	1-163-038-00	CERAMIC CHIP	0.1MF		25V
					(KV-25K5B/29K5B)
C103	1-104-665-11	ELECT	100MF	20%	25V
C105	1-126-965-11	ELECT	22MF	20%	50V
C108	1-163-465-11	CERAMIC CHIP	9PF	0.25PF	50V
C109	1-164-004-11	CERAMIC CHIP	0.1MF	10%	25V
C110	1-163-038-00	CERAMIC CHIP	0.1MF		25V
C111	1-216-296-00	SHORT	0		(KV-25K5A/25K5D/25K5E/25K5U/ 29K5A/29K5D/29K5E/29K5U)
	1-163-059-00	CERAMIC CHIP	0.01MF		50V
					(KV-25K5B/29K5B)
C112	1-163-031-11	CERAMIC CHIP	0.01MF		50V
C115	1-164-489-11	CERAMIC CHIP	0.22MF	10%	16V
C116	1-126-961-11	ELECT	2.2MF	20%	50V
C117	1-126-961-11	ELECT	2.2MF	20%	50V
C118	1-163-038-00	CERAMIC CHIP	0.1MF		25V
C119	1-163-017-00	CERAMIC CHIP	0.0047MF	10%	50V
					(KV-25K5B/29K5B)

A

REF. NO.	PART.NO	DESCRIPTION			REMARK
C121	1-163-031-11	CERAMIC CHIP	0.01MF		50V
					(KV-25K5B/29K5B)
C122	1-104-665-11	ELECT	100MF	20%	25V
					(KV-25K5B/29K5B)
C129	1-126-963-11	ELECT	4.7MF	20%	50V
C133	1-162-638-11	CERAMIC CHIP	1MF		16V
					(KV-25K5B/29K5B)
C134	1-128-551-11	ELECT	22MF	20%	25V
C135	1-164-004-11	CERAMIC CHIP	0.1MF	10%	25V
C137	1-163-017-91	CERAMIC CHIP	0.0047MF	10%	50V
C138	1-165-319-11	CERAMIC CHIP	0.1MF		50V
C139	1-163-031-11	CERAMIC CHIP	0.01MF		50V
C140	1-163-031-11	CERAMIC CHIP	0.01MF		50V
C143	1-104-664-11	ELECT	47MF	20%	25V
C201	1-104-666-11	ELECT	220MF	20%	25V
C203	1-126-942-61	ELECT	1000MF	20%	25V
C204	1-126-942-61	ELECT	1000MF	20%	25V
C206	1-126-960-11	ELECT	1MF	20%	50V
C207	1-126-972-11	ELECT	1000MF	20%	50V
C208	1-126-960-11	ELECT	1MF	20%	50V
C215	1-164-004-11	CERAMIC CHIP	0.1MF	10%	25V
C301	1-163-038-00	CERAMIC CHIP	0.1MF		25V
C302	1-126-967-11	ELECT	47MF	20%	16V
C303	1-101-004-00	CERAMIC	0.01MF		50V
C304	1-126-964-11	ELECT	10MF	20%	50V
C305	1-163-005-11	CERAMIC CHIP	470PF	10%	50V
C307	1-164-232-11	CERAMIC CHIP	0.01MF	10%	50V
C308	1-164-004-11	CERAMIC CHIP	0.1MF	10%	25V
C309	1-126-963-11	ELECT	4.7MF	20%	50V
C312	1-163-099-00	CERAMIC CHIP	18PF	5%	50V
C313	1-163-099-00	CERAMIC CHIP	18PF	5%	50V
C314	1-163-038-00	CERAMIC CHIP	0.1MF		25V
C316	1-163-259-91	CERAMIC CHIP	220PF	5%	50V
C317	1-136-169-00	FILM	0.22MF	5%	50V
C319	1-126-964-11	ELECT	10MF	20%	50V
C321	1-126-963-11	ELECT	4.7MF	20%	50V
C322	1-164-004-11	CERAMIC CHIP	0.1MF	10%	25V
C328	1-104-664-11	ELECT	47MF	20%	25V
C329	1-164-232-11	CERAMIC CHIP	0.01MF	10%	50V
C330	1-163-038-00	CERAMIC CHIP	0.1MF		25V
C331	1-164-232-11	CERAMIC CHIP	0.01MF	10%	50V
C332	1-164-232-11	CERAMIC CHIP	0.01MF	10%	50V
C333	1-126-960-91	ELECT	1MF	20%	50V
C334	1-163-021-91	CERAMIC CHIP	0.0047MF	10%	50V
C335	1-164-232-11	CERAMIC CHIP	0.01MF	10%	50V
C336	1-164-232-11	CERAMIC CHIP	0.01MF	10%	50V
C337	1-164-232-11	CERAMIC CHIP	0.01MF	10%	50V
C338	1-126-967-11	ELECT	47MF	20%	50V
C339	1-163-038-00	CERAMIC CHIP	0.1MF		25V
C350	1-163-017-91	CERAMIC CHIP	0.0047MF	10%	50V
C351	1-163-017-91	CERAMIC CHIP	0.0047MF	10%	50V
C401	1-163-141-00	CERAMIC CHIP	0.001MF	5%	50V
C402	1-126-960-11	ELECT	1MF	20%	50V
C403	1-163-017-00	CERAMIC CHIP	0.0047MF	10%	50V
C405	1-163-141-00	CERAMIC CHIP	0.001MF	5%	50V
C406	1-126-960-11	ELECT	1MF	20%	50V
C407	1-126-964-11	ELECT	10MF	20%	50V
C408	1-126-964-11	ELECT	10MF	20%	50V
C410	1-126-964-11	ELECT	10MF	20%	50V
C413	1-163-141-00	CERAMIC CHIP	0.001MF	5%	50V
C414	1-163-141-00	CERAMIC CHIP	0.001MF	5%	50V
					(KV-25K5A/25K5B/25K5D/25K5E/25K5U)
	1-126-960-11	ELECT	1MF	20%	50V
					(KV-29K5A/29K5B/29K5D/29K5E/29K5U)
C415	1-163-017-00	CERAMIC CHIP	0.0047MF	10%	50V
C416	1-126-964-11	ELECT	10MF	20%	50V
C417	1-163-141-00	CERAMIC CHIP	0.001MF	5%	50V
C418	1-126-960-11	ELECT	1MF	20%	50V
C422	1-163-017-00	CERAMIC CHIP	0.0047MF	10%	50V
C423	1-126-964-11	ELECT	10MF	20%	50V
C430	1-104-664-11	ELECT	47MF	20%	25V
C432	1-163-141-00	CERAMIC CHIP	0.001MF	5%	50V
C433	1-163-141-00	CERAMIC CHIP	0.001MF	5%	50V
C434	1-126-935-11	ELECT	470MF	20%	16V
C435	1-163-017-00	CERAMIC CHIP	0.0047MF	10%	50V
C436	1-163-017-00	CERAMIC CHIP	0.0047MF	10%	50V
C437	1-535-465-11	LEAD, JUMPER	(5.0MM)		
C438	1-535-465-11	LEAD, JUMPER	(5.0MM)		
C443	1-163-017-00	CERAMIC CHIP	0.0047MF	10%	50V
C444	1-163-017-00	CERAMIC CHIP	0.0047MF	10%	50V
C445	1-163-017-00	CERAMIC CHIP	0.0047MF	10%	50V
C501	1-126-968-11	ELECT	100MF	20%	50V
C502	1-163-038-00	CERAMIC CHIP	0.1MF		25V
C503	1-126-968-11	ELECT	100MF	20%	50V
C504	1-106-220-00	MYLAR	0.1MF	10%	100V
C505	1-136-173-00	FILM	0.47MF	5%	50V
C506	1-164-232-11	CERAMIC CHIP	0.01MF	10%	50V
C507	1-126-933-11	ELECT	100MF	20%	16V
C508	1-126-960-11	ELECT	1MF	20%	50V
C509	1-107-364-11	MYLAR	0.01MF	10%	200V
C510	1-163-133-00	CERAMIC CHIP	470PF	5%	50V
C512	1-162-114-00	CERAMIC	0.0047MF		2KV
C513	1-107-662-11	ELECT	22MF	20%	250V
C515	1-104-666-11	ELECT	220MF	20%	25V

The components identified by shading and marked ⚠ are critical for safety
Replace only with the part number specified.

A

REF. NO.		PART.NO	DESCRIPTION			REMARK
C517		1-104-666-11	ELECT	220MF	20%	25V
C518		1-106-375-12	MYLAR	0.022MF	99%	200V
C519		1-163-275-11	CERAMIC CHIP	0.001MF	5%	50V
C520		1-163-038-00	CERAMIC CHIP	0.1MF		25V
C522		1-137-399-11	FILM	0.1MF	5%	50V
C531		1-126-964-11	ELECT	10MF	20%	50V
C532		1-163-037-11	CERAMIC CHIP	0.022MF	10%	50V
C533		1-163-017-00	CERAMIC CHIP	0.0047MF	10%	50V
						(KV-29K5A/29K5B/29K5D/29K5E/29K5U)
C535		1-163-251-11	CERAMIC CHIP	100PF	5%	50V
C536		1-115-522-11	FILM	1MF	5%	200V
C537		1-137-417-11	MYLAR	0.0047MF	10%	200V
C538		1-164-004-71	CERAMIC CHIP	0.1MF	10%	25V
C539		1-126-326-51	ELECT	10MF	20%	250V
						(KV-25K5A/25K5B/25K5D/25K5E/25K5U)
		1-111-230-11	ELECT	1MF	20%	160V
						(KV-29K5A/29K5B/29K5D/29K5E/29K5U)
C540		1-106-387-00	MYLAR	0.068MF	10%	200V
						(KV-25K5A/25K5B/25K5D/25K5E/25K5U)
		1-136-206-11	FILM	0.033MF	10%	400V
						(KV-29K5A/29K5B/29K5D/29K5E/29K5U)
C541		1-106-383-00	MYLAR	0.047MF	10%	200V
C542		1-162-134-11	CERAMIC	470PF	10%	2KV
C543		1-162-134-11	CERAMIC	470PF	10%	2KV
C544		1-163-017-00	CERAMIC CHIP	0.0047MF	10%	50V
C545		1-126-960-11	ELECT	1MF	20%	50V
C546		1-130-895-00	FILM	0.056MF	5%	400V
C547		1-117-813-11	FILM	0.75MF	5%	200V
C548		1-162-134-11	CERAMIC	470PF	10%	2KV
C550		1-107-638-11	ELECT	33MF	20%	160V
C552		1-102-212-00	CERAMIC	820PF	10%	500V
C553		1-137-417-11	MYLAR	0.0047MF	10%	200V
C555		1-216-296-00	SHORT	0		(KV-25K5A/25K5D/25K5E/25K5U)
		1-117-650-11	FILM	18000P	3%	1.2KV
						(KV-25K5B)
		1-117-648-11	FILM	15000PF	3%	1.2KV
						(KV-29K5A/29K5B/29K5D/29K5E/29K5U)
C571		1-123-024-21	ELECT	33MF		160V
C572		1-104-665-11	ELECT	100MF	20%	25V
C579		1-535-465-11	LEAD, JUMPER (5.0MM)			
						(KV-25K5A/25K5B/25K5D/25K5E/25K5U)
C580		1-164-232-11	CERAMIC CHIP	0.01MF	10%	50V
C582		1-163-275-11	CERAMIC CHIP	0.001MF	5%	50V
C584		1-126-963-11	ELECT	4.7MF	20%	50V
C601	⚠	1-107-563-11	FILM	0.1MF	20%	300V
C602		1-107-563-11	FILM	0.1MF	20%	300V
C603	⚠	1-117-700-51	CERAMIC	0.0022MF	99%	250V
C604	⚠	1-117-700-51	CERAMIC	0.0022MF	99%	250V
C605		1-104-652-11	ELECT	470MF	20%	10V
C606		1-125-555-11	ELECT(BLOCK)	330MF	20%	400V
C607		1-125-787-51	CERAMIC	680PF	10%	2KV
C609		1-107-915-11	ELECT	2200MF	20%	50V
C610		1-104-665-11	ELECT	100MF	20%	25V
C611		1-165-127-11	CERAMIC	470PF	10%	500V
C612	⚠	1-161-964-51	CERAMIC	0.0047MF		250V
C613	⚠	1-161-964-51	CERAMIC	0.0047MF		250V
C614	⚠	1-161-964-51	CERAMIC	0.0047MF		250V
						(KV-29K5A/29K5B/29K5D/29K5E/29K5U)
C615		1-130-202-00	FILM	0.022MF	10%	400V
C618		1-107-890-11	ELECT	2200MF	20%	25V
C621		1-163-005-11	CERAMIC CHIP	470PF	10%	50V
C622	⚠	1-161-964-51	CERAMIC	0.0047MF		250V
C624		1-104-665-11	ELECT	100MF	20%	25V
C625		1-104-665-11	ELECT	100MF	20%	25V
C628		1-124-347-00	ELECT	100MF	20%	160V
C629		1-136-189-00	FILM	0.1MF	10%	250V
C630		1-165-127-11	CERAMIC	470PF	10%	500V
C633		1-104-332-11	CERAMIC	470PF	10%	2KV
C635		1-107-675-11	ELECT	1MF	20%	160V
C638		1-107-670-11	ELECT	10MF	20%	400V
C639		1-104-665-11	ELECT	100MF	20%	25V
C640		1-104-664-11	ELECT	47MF	20%	25V
C641		1-104-665-11	ELECT	100MF	20%	25V
C642		1-104-665-11	ELECT	100MF	20%	25V
C646		1-107-974-11	CERAMIC	47PF	5%	2KV
			< FILTER >			
CF101		1-404-134-00	TRAP, CERAMIC (5.5MHZ)			
CF105		1-760-154-11	TRAP, CERAMIC			(KV-25K5B/25K5U/29K5B/29K5U)
SWF101		1-767-874-11	FILTER, SURFACE WAVE			
						(KV-25K5A/25K5D/25K5E/25K5U/
						29K5A/29K5D/29K5E/29K5U)
		1-579-273-12	FILTER, SURFACE WAVE			(KV-29K5B/29K5B)
SWF102		1-767-873-11	FILTER, SURFACE WAVE			
SWF103		1-767-803-11	FILTER, SURFACE WAVE			(KV-25K5B/29K5B)
			< CONNECTOR >			
CN001		*1-564-508-11	PLUG, CONNECTOR 5P			
CN007		*1-564-510-11	PLUG, CONNECTOR 7P			
CN101		1-766-922-11	CONNECTOR, BOARD TO BOARD 18P			
CN201		*1-564-507-11	PLUG, CONNECTOR 4P			
CN208		*1-564-508-11	PLUG, CONNECTOR 5P			
CN406		1-564-511-11	PLUG, CONNECTOR 8P			

The components identified by shading and marked ⚠ are critical for safety
Replace only with the part number specified.

REF. NO.	PART.NO	DESCRIPTION	REMARK
CN501	*1-580-798-11	CONNECTOR PIN (DY) 6P	
CN502	*1-691-135-11	PIN, CONNECTOR (PC BOARD) 4P	
CN503	*1-564-507-11	PLUG, CONNECTOR 4P	(KV-29K5A/29K5B/29K5D/29K5E/29K5U)
CN504	*1-564-509-11	PLUG, CONNECTOR 6P	
CN505	*1-568-882-51	PIN, CONNECTOR 7P	(KV-29K5A/29K5B/29K5D/29K5E/29K5U)
CN506	1-695-915-11	TAB (CONTACT)	
CN509	*1-508-784-00	PIN, CONNECTOR (5MM PITCH) 1P	(KV-29K5A/29K5B/29K5D/29K5E/29K5U)
CN602 ⚠	1-508-765-00	PIN, CONNECTOR (5MM PITCH) 3P	
CN603 ⚠	1-508-786-00	PIN, CONNECTOR (5MM PITCH) 2P	
CN606 ⚠	*1-691-291-11	PIN, CONNECTOR (PC BOARD) 5P	
		< DIODE >	
D001	8-719-109-89	DIODE RD5.6ESB2	
D002	8-719-109-89	DIODE RD5.6ESB2	
D004	8-719-109-89	DIODE RD5.6ESB2	
D007	8-719-109-89	DIODE RD5.6ESB2	
D008	8-719-991-33	DIODE 1SS133T-77	
D009	8-719-109-89	DIODE RD5.6ESB2	
D010	8-719-109-89	DIODE RD5.6ESB2	
D011	8-719-109-89	DIODE RD5.6ESB2	
D012	8-719-914-43	DIODE DAN202K	
D014	8-719-058-24	DIODE RB501V-40TE-17	
D015	8-719-914-43	DIODE DAN202K	
D017	8-719-109-89	DIODE RD5.6ESB2	
D018	8-719-991-33	DIODE 1SS133T-77	
D023	8-719-109-89	DIODE RD5.6ESB2	
D101	8-719-982-24	DIODE MTZJ-33A	
D104	8-719-914-43	DIODE DAN202K	(KV-25K5B/29K5B)
D201	8-719-929-15	DIODE HZS9.INBZ	
D202	8-719-914-43	DIODE DAN202K	
D204	8-719-109-89	DIODE RD5.6ESB2	
D205	8-719-109-89	DIODE RD5.6ESB2	
D206	8-719-109-89	DIODE RD5.6ESB2	
D306	8-719-109-89	DIODE RD5.6ESB2	
D307	8-719-109-89	DIODE RD5.6ESB2	
D308	8-719-109-72	DIODE RD3.9ESB2	
D309	8-719-991-33	DIODE 1SS133T-77	
D320	8-719-929-15	DIODE HZS9.INB2	
D405	8-719-109-97	DIODE RD6.8ES-B2	
D406	8-719-109-97	DIODE RD6.8ES-B2	
D407	8-719-109-97	DIODE RD6.8ES-B2	
D409	8-719-109-97	DIODE RD6.8ES-B2	
D414	8-719-109-97	DIODE RD6.8ES-B2	
D415	8-719-929-15	DIODE HZS9.INBZ	
D417	8-719-929-15	DIODE HZS9-INB2	
D422	8-719-109-97	DIODE RD6.8ES-B2	
D423	8-719-109-97	DIODE RD6.8ES-B2	
D427	8-719-109-97	DIODE RD6.8ES-B2	
D501	8-719-302-43	DIODE EL1Z	
D502	8-719-924-13	DIODE MTZJ-T-77-22B	
D511	8-719-028-72	DIODE RGP02-17EL-6433	
D512	8-719-302-43	DIODE EL1Z	
D513	8-719-979-85	DIODE EGP20G	
D514	8-719-979-85	DIODE EGP20G	
D534	8-719-302-43	DIODE EL1Z	
D535	8-719-908-03	DIODE GP08D	
D536	8-719-945-80	DIODE ERC06-15S	
D538	8-719-908-03	DIODE GP08D	
D539	8-719-900-26	DIODE ERD29-08J	
D541	1-535-465-11	LEAD, JUMPER (5.0MM)	
D571	8-719-911-19	DIODE 1SS119-25	
D573	8-719-921-40	DIODE MTZJ-4.7C	
D601	8-719-510-53	DIODE D4SB60L	
D602	8-719-046-74	DIODE AU-01Z-V1	
D603	8-719-312-61	DIODE EU-1Z	
D605	8-719-312-10	DIODE RU4AM-T3	
D608	8-719-067-88	DIODE RG1CLF-B1	
D610	8-719-067-78	DIODE RN3Z-LF014-302	
D613	8-719-911-19	DIODE 1SS119-25	
D614	8-719-058-38	DIODE FMN-G12S	
D619	8-719-043-76	DIODE AK04V0	
D621	8-719-068-00	DIODE ERC04-06SE	
D626	8-719-068-00	DIODE ERC04-06SE	
D627	8-719-510-26	DIODE D1NL20	
D628	8-719-059-23	DIODE P6KE200AG23	
D629	8-719-979-64	DIODE UF4005PKG23	
D631	8-719-110-31	DIODE RD12ES-B2	
D632	8-719-510-64	DIODE S2LA20F	
D633	8-719-109-89	DIODE RD5.6ESB2	
		< FERRITE BEAD >	
FB001	1-412-911-11	FERRITE 0UH	
FB002	1-412-911-11	FERRITE 0UH	
FB601	1-412-911-11	FERRITE 0UH	
FB602	1-412-911-11	FERRITE 0UH	
FB605	1-410-397-21	FERRITE 1.1UH	
FB608	1-412-911-11	FERRITE 0UH	
FB609	1-535-465-11	LEAD, JUMPER (5.0MM)	
FB610	1-410-397-21	FERRITE 1.1UH	
FB611	1-410-397-21	FERRITE 1.1UH	
FB612	1-535-465-11	LEAD, JUMPER (5.0MM)	

The components identified by shading and marked ⚠ are critical for safety
Replace only with the part number specified.

A

REF. NO.	PART.NO	DESCRIPTION	REMARK
		< IC >	
IC001	8-759-525-78	SAA5497PS/MIA/040	
			(KV-25K5A/25K5D/29K5A/29K5D)
	8-759-526-01	SAA5497PS/MIA/038	
			(KV-25K5B/25K5E/25K5U/29K5B/29K5E/29K5U)
IC003	8-759-468-56	IC MN1381T	
IC004	8-759-432-33	IC ST24W08FM6TR	
IC005	8-759-516-41	IC CD4052BCM	
IC101	8-759-466-49	IC TDA9817/V1	(KV-25K5A/25K5D/25K5E/25K5U/
			29K5A/29K5D/29K5E/29K5U)
	8-759-466-47	IC TDA9818/V1	(KV-25K5B/29K5B)
IC201	8-759-442-74	IC TDA7495	
IC301	8-752-082-35	IC CXA2060AS	
IC501	8-759-192-71	IC STV9379	
IC531	8-759-450-95	IC LM393N	
IC603	8-749-920-61	IC SE135N	
IC604	8-759-524-82	IC TYA7805CTV	
IC605	8-759-524-83	IC TYA7809CTV	
IC606	8-749-013-75	IC STR-F6654	
IC608	8-759-524-82	IC TYA7805CTV	
IC609	8-759-468-89	IC TOP209P	
		< SOCKET >	
J401	1-766-296-11	CONNECTOR, DUAL SCART	
J404	1-770-989-11	JACK, PIN 2P	
		< COIL >	
L001	1-408-603-31	INDUCTOR 10UH	
L102	1-408-599-21	INDUCTOR 4.7UH	
L103	1-403-686-11	COIL	
L104	1-410-671-31	INDUCTOR 47UH	
L106	1-408-417-00	INDUCTOR 47UH	
L108	1-410-985-11	INDUCTOR CHIP 0.22UH	(KV-25K5B/29K5B)
L109	1-410-789-11	INDUCTOR 0.47UH	(KV-25K5B/29K5B)
L201	1-535 465 11	LEAD, JUMPER (5.0MM)	
L202	1-535-465-11	LEAD, JUMPER (5.0MM)	
L203	1-406-979-11	INDUCTOR 0UH	
L302	1-408-417-00	INDUCTOR 47UH	
L303	1-408-609-41	INDUCTOR 33UH	
L401	1-408-417-00	INDUCTOR 47UH	
L402	1-408-417-00	INDUCTOR 47UH	
L405	1-216-295-00	SHORT 0	
L406	1-216-295-00	SHORT 0	
L501	1-408-417-00	INDUCTOR 47UH	
L502	1-412-529-11	INDUCTOR 22UH	
L503	1-412-521-31	INDUCTOR 4.7UH	
L532	1-412-552-11	INDUCTOR 2.2MMH	
			(KV-25K5A/25K5B/25K5D/25K5E/25K5U)
	1-412-553-11	INDUCTOR 3.3MMH	
			(KV-29K5A/29K5B/29K5D/29K5E/29K5U)
L533	1-406-989-21	INDUCTOR 0UH	
L535	1-459-111-00	INDUCTOR 0UH	
L537	1-409-756-11	COIL, HORIZONTAL LINEARITY	
			(KV-25K5A/25K5D/25K5E/25K5U)
	1-416-214-11	COIL, HORIZONTAL LINEARITY	(KV-25K5B)
	1-409-855-11	COIL, HORIZONTAL LINEARITY	
			(KV-29K5A/29K5B/29K5D/29K5E/29K5U)
L540	1-535 465 11	LEAD, JUMPER (5.0MM)	
L571	1-412-533-21	INDUCTOR 47UH	
L602	1-408-417-00	INDUCTOR 47UH	
		< PHOTO COUPLER >	
PH601 ⚠	8-749-010-64	PHOTO COUPLER PC123F2	
		< TRANSISTOR >	
Q004	8-729-216-22	TRANSISTOR 2SA1162-G	
Q005	1-801-806-11	TRANSISTOR DTC144EKA	
Q006	1-801-806-11	TRANSISTOR DTC144EKA	
Q007	8-729-620-06	TRANSISTOR 2SC3052-EF	
Q008	8-729-620-06	TRANSISTOR 2SC3052-EF	
Q009	8-729-620-06	TRANSISTOR 2SC3052-EF	
Q010	8-729-620-06	TRANSISTOR 2SC3052-EF	
Q011	1-801-806-11	TRANSISTOR DTC144EKA	
Q012	8-729-620-06	TRANSISTOR 2SC3052-EF	
Q013	8-729-620-06	TRANSISTOR 2SC3052-EF	
			(KV-29K5A/29K5B/29K5D/29K5E/29K5U)
Q014	8-729-120-28	TRANSISTOR 2SC1623-L5L6	
Q101	8-729-216-22	TRANSISTOR 2SA1162-G	
Q107	8-729-022-54	TRANSISTOR 2SC3779C,D-AA	(KV-25K5B/29K5B)
Q109	1-801-806-11	TRANSISTOR DTC144EK	(KV-25K5B/29K5B)
Q110	1-801-806-11	TRANSISTOR DTC144EK	(KV-25K5B/29K5B)
Q111	8-729-216-22	TRANSISTOR 2SA1162-G	(KV-25K5B/29K5B)
Q112	8-801-806-11	TRANSISTOR DTC144EK	(KV-25K5B/29K5B)
Q202	8-729-620-06	TRANSISTOR 2SC3052-EF	
Q401	1-729-920-72	TRANSISTOR 2SA1037K	
Q405	8-729-120-28	TRANSISTOR 2SC1623-L5L6	
Q408	8-729-120-28	TRANSISTOR 2SC1623-L5L6	
Q501	8-729-620-06	TRANSISTOR 2SC3052-EF	
Q532	8-729-038-83	TRANSISTOR 2SK2251-01-F19	
Q533	8-729-040-62	TRANSISTOR 2SD2539(LBSONY)	
Q535	8-729-119-80	TRANSISTOR 2SC2688-LK	
Q571	8-729-105-08	TRANSISTOR 2SA1330-O6	
Q574	8-729-120-28	TRANSISTOR 2SC1623-L5L6	

REF. NO.	PART.NO	DESCRIPTION				REMARK
Q575	1-801-806-11	TRANSISTOR DTC144EKA				
Q576	8-729-120-28	TRANSISTOR 2SC1623-L5L6				
Q601	8-729-216-22	TRANSISTOR 2SA1162-G				
		< RESISTOR >				
JR023	1-216-296-00	SHORT	0			
JR031	1-216-295-00	SHORT	0			
JR033	1-216-296-00	SHORT	0			
JR403	1-216-073-00	RES,CHIP	10K	5%	1/10W	
JR409	1-216-295-00	SHORT	0			
JR411	1-216-295-00	SHORT	0			
JR412	1-216-295-00	SHORT	0			
JR610	1-216-296-00	SHORT	0			
JR613	1-216-296-00	SHORT	0			
JW128	1-249-437-11	CARBON	47K	5%	1/4W	(KV-25K5A/25K5B/25K5D/25K5E/29K5A/29K5B/29K5D/29K5E)
JW220	8-719-109-89	DIODE	RDS.6ESB2			
R001	1-216-025-00	RES,CHIP	100	5%	1/10W	
R002	1-216-025-00	RES,CHIP	100	5%	1/10W	
R003	1-216-065-00	RES,CHIP	4.7K	5%	1/10W	
R004	1-216-065-00	RES,CHIP	4.7K	5%	1/10W	
R005	1-216-065-00	RES,CHIP	4.7K	5%	1/10W	
R007	1-216-065-00	RES,CHIP	4.7K	5%	1/10W	
R009	1-216-025-00	RES,CHIP	100	5%	1/10W	
R010	1-216-025-00	RES,CHIP	100	5%	1/10W	
R011	1-216-025-00	RES,CHIP	100	5%	1/10W	
R012	1-247-807-31	CARBON	100	5%	1/4W	
R013	1-216-214-00	RES,CHIP	4.7K	5%	1/8W	
R014	1-216-057-00	RES,CHIP	2.2K	5%	1/10W	
R015	1-216-049-00	RES,CHIP	1K	5%	1/10W	
R016	1-216-073-00	RES,CHIP	10K	5%	1/10W	
R019	1-216-053-00	RES,CHIP	1.5K	5%	1/10W	
R023	1-216-295-00	SHORT	0			
R029	1-216-073-00	RES,CHIP	10K	5%	1/10W	
R030	1-216-081-00	RES,CHIP	22K	5%	1/10W	(KV-29K5A/29K5B/29K5D/29K5E/29K5U)
R032	1-216-089-00	RES,CHIP	47K	5%	1/10W	
R034	1-216-065-00	RES,CHIP	4.7K	5%	1/10W	
R035	1-216-049-00	RES,CHIP	1K	5%	1/10W	
R036	1-216-065-00	RES,CHIP	4.7K	5%	1/10W	
R038	1-216-073-00	RES,CHIP	10K	5%	1/10W	
R039	1-216-089-91	RES,CHIP	47K	5%	1/10W	
R050	1-216-041-00	RES,CHIP	470	5%	1/10W	
R051	1-216-049-00	RES,CHIP	1K	5%	1/10W	
R053	1-216-065-00	RES,CHIP	4.7K	5%	1/10W	
R054	1-216-041-00	RES,CHIP	470	5%	1/10W	
R055	1-216-081-00	RES,CHIP	22K	5%	1/10W	
R056	1-216-105-00	RES,CHIP	220K	5%	1/10W	
R057	1-216-075-00	RES,CHIP	12K	5%	1/10W	
R058	1-216-063-91	RES,CHIP	3.9K	5%	1/10W	
R059	1-216-089-00	RES,CHIP	47K	5%	1/10W	
R060	1-216-174-00	RES,CHIP	100	5%	1/8W	
R061	1-216-174-00	RES,CHIP	100	5%	1/8W	
R062	1-216-033-00	RES,CHIP	220	5%	1/10W	
R063	1-216-065-00	RES,CHIP	4.7K	5%	1/10W	(KV-25K5B/29K5B)
R064	1-216-065-00	RES,CHIP	4.7K	5%	1/10W	(KV-25K5B/29K5B)
R065	1-216-025-00	RES,CHIP	100	5%	1/10W	
R066	1-216-065-00	RES,CHIP	4.7K	5%	1/10W	
R067	1-216-065-00	RES,CHIP	4.7K	5%	1/10W	
R069	1-216-049-00	RES,CHIP	1K	5%	1/10W	
R070	1-216-081-00	RES,CHIP	22K	5%	1/10W	
R071	1-216-214-00	RES,CHIP	4.7K	5%	1/8W	
R072	1-216-097-00	RES,CHIP	100K	5%	1/10W	
R073	1-216-097-00	RES,CHIP	100K	5%	1/10W	
R075	1-216-069-00	RES,CHIP	6.8K	5%	1/10W	
R077	1-216-083-00	RES,CHIP	27K	5%	1/10W	
R078	1-216-065-00	RES,CHIP	4.7K	5%	1/10W	(KV-29K5A/29K5B/29K5D/29K5E/29K5U)
R080	1-216-073-00	RES,CHIP	10K	5%	1/10W	
R081	1-216-073-00	RES,CHIP	10K	5%	1/10W	
R082	1-216-053-00	RES,CHIP	1.5K	5%	1/10W	
R083	1-216-031-00	RES,CHIP	180	5%	1/10W	
R084	1-216-053-00	RES,CHIP	1.5K	5%	1/10W	
R085	1-216-031-00	RES,CHIP	180	5%	1/10W	
R086	1-216-053-00	RES,CHIP	1.5K	5%	1/10W	
R087	1-216-180-00	RES,CHIP	180	5%	1/8W	
R088	1-216-065-00	RES,CHIP	4.7K	5%	1/10W	
R089	1-216-081-00	RES,CHIP	22K	5%	1/10W	(KV-29K5A/29K5B/29K5D/29K5E/29K5U)
R090	1-216-057-00	RES,CHIP	2.2K	5%	1/10W	(KV-29K5A/29K5B/29K5D/29K5E/29K5U)
R091	1-216-081-00	RES,CHIP	22K	5%	1/10W	(KV-29K5A/29K5B/29K5D/29K5E/29K5U)
R092	1-216-073-00	RES,CHIP	10K	5%	1/10W	(KV-29K5A/29K5B/29K5D/29K5E/29K5U)
R093	1-216-230-00	RES,CHIP	22K	5%	1/8W	
R094	1-216-057-00	RES,CHIP	2.2K	5%	1/10W	
R095	1-216-025-00	RES,CHIP	100	5%	1/10W	
R096	1-247-807-31	CARBON	100	5%	1/4W	
R097	1-247-807-31	CARBON	100	5%	1/4W	
R098	1-247-807-31	CARBON	100	5%	1/4W	

A

REF. NO.	PART.NO	DESCRIPTION			REMARK
R099	1-247-807-31	CARBON	100	5%	1/4W
R101	1-216-049-00	RES,CHIP	1K	5%	1/10W
R106	1-215-900-11	METAL OXIDE	22K	5%	2W F
R110	1-216-206-91	RES, CHIP	2.2K	5%	1/10W (KV-25K5B/29K5B)
R111	1-216-057-00	RES,CHIP	2.2K	5%	1/10W (KV-25K5B/29K5B)
R112	1-216-057-00	RES,CHIP	2.2K	5%	1/10W (KV-25K5B/29K5B)
R116	1-249-437-11	CARBON	47K	5%	1/4W
R120	1-216-037-00	RES,CHIP	330	5%	1/10W
R121	1-216-025-00	RES,CHIP	100	5%	1/10W
R122	1-216-025-00	RES,CHIP	100	5%	1/10W
R127	1-216-031-00	RES,CHIP	180	5%	1/10W (KV-25K5B/29K5B)
R128	1-216-065-00	RES,CHIP	4.7K	5%	1/10W (KV-25K5B/29K5B)
R129	1-216-063-91	RES,CHIP	3.9K	5%	1/10W (KV-25K5B/29K5B)
R133	1-216-295-00	SHORT	0 (KV-25K5A/25K5D/25K5E/25K5U/29K5A/29K5D/29K5E/29K5U)		
R142	1-216-295-00	SHORT	0		
R143	1-216-025-00	RES,CHIP	100	5%	1/10W
R144	1-216-079-00	RES,CHIP	18K	5%	1/10W
R145	1-216-212-00	RES,CHIP	3.9K	5%	1/8W
R147	1-216-017-91	RES,CHIP	47	5%	1/10W (KV-25K5B/29K5B)
R148	1-216-174-00	RES,CHIP	100	5%	1/8W (KV-25K5B/29K5B)
R149	1-216-049-00	RES,CHIP	1K	5%	1/10W (KV-25K5B/29K5B)
R151	1-216-049-00	RES,CHIP	1K	5%	1/10W
R152	1-216-025-00	RES,CHIP	100	5%	1/10W (KV-25K5B/29K5B)
R153	1-216-180-00	RES,CHIP	180	5%	1/8W (KV-25K5B/29K5B)
R154	1-216-238-91	RES,CHIP	47K	5%	1/8W
R155	1-216-089-00	RES,CHIP	47K	5%	1/10W
R156	1-216-073-00	RES,CHIP	10K	5%	1/10W (KV-25K5B/29K5B)
R157	1-216-063-91	RES,CHIP	3.9K	5%	1/10W (KV-25K5B/29K5B)
R158	1-216-069-00	RES,CHIP	6.8K	5%	1/10W (KV-25K5B/29K5B)
R204	1-247-863-91	CARBON	22K	5%	1/4W
R206	1-216-085-00	RES,CHIP	33K	5%	1/10W
R207	1-216-295-00	SHORT	0		
R209	1-216-065-00	RES,CHIP	4.7K	5%	1/10W
R211	1-215-873-00	METAL OXIDE	4.7K	5%	1W F
R213	1-216-089-00	RES,CHIP	47K	5%	1/10W
R301	1-216-025-00	RES,CHIP	100	5%	1/10W
R302	1-216-081-00	RES,CHIP	22K	5%	1/10W
R303	1-216-073-00	RES,CHIP	10K	5%	1/10W
R304	1-216-073-00	RES,CHIP	10K	5%	1/10W
R306	1-216-206-00	RES,CHIP	2.2K	5%	1/8W
R309	1-216-675-11	METAL CHIP	10K	0.50%	1/10W
R310	1-216-022-00	RES,CHIP	75	5%	1/10W
R311	1-216-022-00	RES,CHIP	75	5%	1/10W
R313	1-216-025-00	RES,CHIP	100	5%	1/10W
R314	1-216-025-00	RES,CHIP	100	5%	1/10W
R315	1-216-075-91	RES,CHIP	12K	5%	1/10W
R316	1-216-025-00	RES,CHIP	100	5%	1/10W
R317	1-216-049-00	RES,CHIP	1K	5%	1/10W
R318	1-216-025-00	RES,CHIP	100	5%	1/10W
R319	1-216-025-00	RES,CHIP	100	5%	1/10W
R320	1-216-025-00	RES,CHIP	100	5%	1/10W
R321	1-216-025-00	RES,CHIP	100	5%	1/10W
R323	1-216-025-00	RES,CHIP	100	5%	1/10W
R324	1-412-002-21	INDUCTOR	4.7UH		
R325	1-412-002-21	INDUCTOR	4.7UH		
R326	1-216-129-00	RES,CHIP	2.2M	5%	1/10W
R327	1-216-295-00	SHORT	0		
R331	1-216-057-00	RES,CHIP	2.2K	5%	1/10W
R332	1-216-057-00	RES,CHIP	2.2K	5%	1/10W
R333	1-216-057-00	RES,CHIP	2.2K	5%	1/10W
R334	1-216-025-00	RES,CHIP	100	5%	1/10W
R335	1-216-025-00	RES,CHIP	100	5%	1/10W
R337	1-216-065-00	RES,CHIP	4.7K	5%	1/10W
R338	1-216-049-00	RES,CHIP	1K	5%	1/10W
R401	1-216-113-00	RES,CHIP	470K	5%	1/10W
R402	1-216-295-71	CONDUCTER CHIP			
R403	1-216-041-00	RES,CHIP	470	5%	1/10W
R404	1-216-113-00	RES,CHIP	470K	5%	1/10W
R405	1-216-295-00	SHORT	0		
R406	1-216-113-00	RES,CHIP	470K	5%	1/10W
R408	1-216-022-00	RES,CHIP	75	5%	1/10W
R409	1-216-025-00	RES,CHIP	100	5%	1/10W
R410	1-216-025-00	RES,CHIP	100	5%	1/10W
R411	1-216-022-00	RES,CHIP	75	5%	1/10W
R412	1-216-025-00	RES,CHIP	100	5%	1/10W
R413	1-216-295-00	SHORT	0		
R414	1-216-022-00	RES,CHIP	75	5%	1/10W
R415	1-216-022-00	RES,CHIP	75	5%	1/10W

A

REF. NO.	PART.NO	DESCRIPTION				REMARK
R417	1-247-804-11	CARBON	75	5%	1/4W	
						(KV-25K5A/25K5B/25K5D/25K5E/
						29K5A/29K5B/29K5D/29K5E)
	1-247-698-11	CARBON	68	5%	1/4W	
						(KV-25K5U/29K5U)
R418	1-260-095-11	CARBON	470	5%	1/2W	
						(KV-25K5A/25K5B/25K5D/25K5E)
	1-249-414-11	CARBON	560	5%	1/2W	
						(KV-25K5U/29K5U)
R419	1-216-022-00	RES,CHIP	75	5%	1/10W	
R420	1-216-041-00	RES,CHIP	470	5%	1/10W	
R421	1-216-113-00	RES,CHIP	470K	5%	1/10W	
R422	1-216-295-00	SHORT	0			
R425	1-216-077-00	RES,CHIP	15K	5%	1/10W	
R426	1-216-073-00	RES,CHIP	10K	5%	1/10W	
R427	1-216-113-00	RES,CHIP	470K	5%	1/10W	
R429	1-216-041-00	RES,CHIP	470	5%	1/10W	
R430	1-216-113-00	RES,CHIP	470K	5%	1/10W	
R431	1-216-295-00	SHORT	0			
R432	1-216-113-00	RES,CHIP	470K	5%	1/10W	
R435	1-216-022-00	RES,CHIP	75	5%	1/10W	
R436	1-216-041-00	RES,CHIP	470	5%	1/10W	
R439	1-216-041-00	RES,CHIP	470	5%	1/10W	
R440	1-216-113-00	RES,CHIP	470K	5%	1/10W	
R441	1-216-295-00	SHORT	0			
R442	1-216-077-00	RES,CHIP	15K	5%	1/10W	
R443	1-216-073-00	RES,CHIP	10K	5%	1/10W	
R450	1-216-041-00	RES,CHIP	470	5%	1/10W	
R454	1-216-041-00	RES,CHIP	470	5%	1/10W	
R457	1-216-025-00	RES,CHIP	100	5%	1/10W	
R459	1-247-807-31	CARBON	100	5%	1/4W	
R460	1-249-403-11	CARBON	68	5%	1/4W	
R501	1-216-081-00	RES,CHIP	22K	5%	1/10W	
R502	1-216-097-00	RES,CHIP	100K	5%	1/10W	
R503	1-215-888-00	METAL OXIDE	220	5%	2W F	
R504	1-249-385-11	CARBON	2.2	5%	1/4W F	
R505	1-216-065-00	RES,CHIP	4.7K	5%	1/10W	
R506	1-216-061-00	RES,CHIP	3.3K	5%	1/10W	
R507	1-216-349-00	METAL OXIDE	1	5%	1W F	
R508	1-216-065-00	RES,CHIP	4.7K	5%	1/10W	
R509	1-216-061-00	RES,CHIP	3.3K	5%	1/10W	
R510	1-216-081-00	RES,CHIP	22K	5%	1/10W	
R511	1-215-869-11	METAL OXIDE	1K	5%	1W F	
R512	1-249-377-11	CARBON	0.47	5%	1/4W F	
R513	1-216-097-00	RES,CHIP	100K	5%	1/10W	
R514	1-249-377-11	CARBON	0.47	5%	1/4W F	
R515	1-249-377-11	CARBON	0.47	5%	1/4W F	
R516	1-249-493-11	CARBON	56K	5%	1/2W	
R517	1-249-434-11	CARBON	27K	5%	1/4W	
						(KV-25K5A/25K5B/25K5D/25K5E/25K5U)
	1-249-429-11	CARBON	10K	5%	1/4W	
						(KV-29K5A/29K5B/29K5D/29K5E/29K5U)
R518	1-216-065-00	RES,CHIP	4.7K	5%	1/10W	
R520	1-215-884-11	METAL OXIDE	47	5%	2W F	
R521	1-216-117-00	RES,CHIP	680K	5%	1/10W	
						(KV-25K5A/25K5B/25K5D/25K5E/25K5U)
	1-208-845-11	RES,CHIP	1M	5%	1/10W	
						(KV-29K5A/29K5B/29K5D/29K5E/29K5U)
R522	1-216-097-00	RES,CHIP	100K	5%	1/10W	
R523	1-208-845-11	RES,CHIP	1M	5%	1/10W	
						(KV-25K5A/25K5D/25K5E/25K5U/29K5A/
						29K5B/29K5D/29K5E/29K5U)
	1-216-117-00	RES,CHIP	680K	5%	1/10W	(KV-25K5B)
R524	1-216-083-00	RES,CHIP	27K	5%	1/10W	
						(KV-25K5A/25K5D/25K5E/25K5U/29K5A/
						29K5B/29K5D/29K5E/29K5U)
	1-216-085-00	RES,CHIP	33K	5%	1/10W	(KV-25K5B)
R525	1-216-057-00	RES,CHIP	2.2K	5%	1/10W	
R526	1-216-089-00	RES,CHIP	47K	5%	1/10W	
R527	1-216-077-00	RES,CHIP	15K	5%	1/10W	
R528	1-216-246-00	RES,CHIP	100K	5%	1/8W	
R529	1-216-073-00	RES,CHIP	10K	5%	1/10W	
R530	1-216-085-00	RES,CHIP	33K	5%	1/10W	
R531	1-216-057-00	RES,CHIP	2.2K	5%	1/10W	
R532	1-216-063-91	RES,CHIP	3.9K	5%	1/10W	
R533	1-216-073-00	RES,CHIP	10K	5%	1/10W	
						(KV-25K5A/25K5D/25K5E/25K5U/
						29K5A/29K5B/29K5D/29K5E/
						29K5U)
	1-216-081-00	RES,CHIP	22K	5%	1/10W	(KV-25K5B)
R534	1-216-107-00	RES,CHIP	220K	5%	1/10W	
						(KV-25K5A/25K5B/25K5D/25K5E/25K5U)
	1-216-113-91	RES,CHIP	470K	5%	1/10W	
						(KV-29K5A/29K5B/29K5D/29K5E/29K5U)
R535	1-216-109-00	RES,CHIP	330K	5%	1/10W	
						(KV-25K5A/25K5B/25K5D/25K5E/25K5U)
	1-216-101-00	RES,CHIP	150K	5%	1/10W	
						(KV-29K5A/29K5B/29K5D/29K5E/29K5U)
R539	1-216-049-00	RES,CHIP	1K	5%	1/10W	
R540	1-216-449-11	METAL OXIDE	56	5%	1W F	
						(KV-25K5A/25K5B/25K5D/25K5E/25K5U)
	1-215-861-00	METAL OXIDE	47	5%	1W F	
						(KV-29K5A/29K5B/29K5D/29K5E/29K5U)
R541	1-216-097-00	RES,CHIP	100K	5%	1/10W	
R542	1-216-089-00	RES,CHIP	47K	5%	1/10W	

The components identified by shading and marked ⚠ are critical for safety
Replace only with the part number specified.

A **C**

REF. NO.		PART.NO	DESCRIPTION			REMARK
R543		1-216-089-00	RES,CHIP	47K	5%	1/10W
R546		1-249-401-11	METAL OXIDE	47	5%	2W F
						(KV-25K5A/25K5B/25K5D/25K5E/25K5U)
		1-215-893-11	METAL OXIDE	1.5K	5%	2W F
						(KV-29K5A/29K5B/29K5D/29K5E/29K5U)
R547		1-535-143-71	LEAD JUMPER (7.5MM)			
						(KV-25K5A/25K5B/25K5D/25K5E/25K5U)
		1-215-893-11	METAL OXIDE	1.5K	5%	2W F
						(KV-29K5A/29K5B/29K5D/29K5E/29K5U)
R548		1-216-397-11	METAL OXIDE	4.7	5%	3W F
R549		1-216-341-11	METAL OXIDE	0.22	5%	1W F
R551		1-215-873-21	METAL OXIDE	4.7K	5%	1W F
R552		1-216-061-00	RES,CHIP	3.3K	5%	1/10W
R553		1-249-381-11	CARBON	1	5%	1/4W F
R571		1-249-417-11	CARBON	1K	5%	1/4W F
R572		1-216-369-00	METAL OXIDE	1	5%	2W F
R573		1-216-097-00	RES,CHIP	100K	5%	1/10W
R574		1-216-065-00	RES,CHIP	4.7K	5%	1/10W
R575		1-216-097-00	RES,CHIP	100K	5%	1/10W
R576		1-249-399-11	CARBON	33	5%	1/4W
R581		1-216-089-00	RES,CHIP	47K	5%	1/10W
R582		1-216-089-00	RES,CHIP	47K	5%	1/10W
R583		1-216-081-00	RES,CHIP	22K	5%	1/10W
R588		1-216-053-00	RES,CHIP	1.5K	5%	1/10W
R589		1-216-097-00	RES,CHIP	100K	5%	1/10W
R590		1-216-081-00	RES,CHIP	22K	5%	1/10W
R591		1-215-892-11	METAL OXIDE	1K	5%	2W F
R593		1-249-439-11	CARBON	68K	5%	1/4W
R594		1-216-057-00	RES,CHIP	2.2K	5%	1/10W
R602		1-202-961-11	CEMENTED	1.8	5%	10W
R603		1-202-933-61	FUSIBLE	0.1	10%	1/2W F
R607	⚠	1-202-961-11	CEMENTED	1.8	5%	10W
R608		1-215-927-00	METAL OXIDE	47K	5%	3W F
R611		1-249-415-11	CARBON	680	5%	1/4W
R613	⚠	1-240-030-91	METAL	4.7M	5%	1/2W
R614	⚠	1-240-030-91	METAL	4.7M	5%	1/2W
R615		1-249-422-11	CARBON	2.7K	5%	1/4W
R616		1-216-393-00	METAL OXIDE	2.2	5%	3W F
R617		1-249-405-11	CARBON	100	5%	1/4W F
R619		1-216-065-00	RES,CHIP	4.7K	5%	1/10W
R622		1-249-401-11	CARBON	47	5%	1/4W
R627		1-249-389-11	CARBON	4.7	5%	1/4W F
R628		1-247-791-91	CARBON	22	5%	1/4W
R652		1-216-393-00	METAL OXIDE	2.2	5%	3W F
R653		1-216-393-00	METAL OXIDE	2.2	5%	3W F
R658		1-215-929-11	METAL OXIDE	100K	5%	3W F
R659		1-216-383-21	METAL OXIDE	0.33	5%	3W F
R660		1-216-384-21	METAL OXIDE	0.39	5%	3W F
R661		1-247-843-11	CARBON	3.3K	5%	1/4W
R662		1-215-929-11	METAL OXIDE	100K	5%	3W F
R664		1-249-417-11	CARBON	1K	5%	1/4W
R665		1-215-877-11	METAL OXIDE	22K	5%	1W F
R667		1-215-927-00	METAL OXIDE	47K	5%	3W F
RV101		1-241-765-11	RES, ADJ, CARBON 22K			(KV-25K5B/29K5B)
			< RELAY >			
RY601	⚠	1-755-245-11	RELAY			
			< SWITCH >			
SW532		1-572-707-11	SWITCH, LEVER			
			< TRANSFORMER >			
T511	⚠	1-453-264-11	TRANSFORMER ASSY, FLYBACK (NX-1680/U2B4)			
						(KV-25K5A/25K5B/25K5D/25K5E/25K5U)
		1-453-265-11	TRANSFORMER ASSY, FLYBACK (NX-1681/U2B4)			
						(KV-29K5A/29K5B/29K5D/29K5E/29K5U)
T531		1-437-195-11	TRANSFORMER, HORIZONTAL DRIVE			
T532		1-431-228-11	TRANSFORMER, POWER MODULATION			
T601	⚠	1-427-962-11	TRANSFORMER, LINE FILTER			
T602		1-431-732-11	TRANSFORMER, CONVERTER (SRT)			
T603	⚠	1-431-777-11	TRANSFORMER, CONVERTER			
			< THERMISTOR >			
THP601	⚠	1-810-961-11	THERMISTOR, POSITIVE			
			< TUNER >			
TU101		1-693-418-11	TUNER (TELE9-001A)			
						(KV-25K5A/25K5B/25K5D/25K5E/
						29K5A/29K5B/29K5D/29K5E)
		8-598-464-00	TUNER (FSS BTP-AU611)			(KV-25K5U/29K5U)
			< CRYSTAL >			
X001		1-578-774-11	VIBRATOR, CRYSTAL			
X302		1-567-505-11	OSCILLATOR, CRYSTAL			
X303		1-567-504-11	OSCILLATOR, CRYSTAL			
**********						
		*A-1638-112-A	C BOARD, COMPLETE			
			**********			
			< CAPACITOR >			
C701		1-102-114-00	CERAMIC	470PF	10%	50V

The components identified by shading and marked ⚠ are critical for safety
Replace only with the part number specified.

C

REF. NO.	PART.NO	DESCRIPTION			REMARK
C702	1-102-115-00	CERAMIC	560PF	10%	50V
C703	1-102-116-00	CERAMIC	680PF	10%	50V
C708	1-162-114-00	CERAMIC	0.0047MF		2KV
C710	1-107-652-11	ELECT	10MF	20%	250V
C712	1-102-116-00	CERAMIC	680PF	10%	50V
C714	1-126-967-11	ELECT	47MF	20%	16V
C717	1-102-114-00	CERAMIC	470PF	10%	50V
C718	1-102-114-00	CERAMIC	470PF	10%	50V
C719	1-102-114-00	CERAMIC	470PF	10%	50V
C722	1-101-880-00	CERAMIC	47PF	5%	50V
C723	1-101-880-00	CERAMIC	47PF	5%	50V
C724	1-101-880-00	CERAMIC	47PF	5%	50V
		< CONNECTOR >			
CN701	1-784-633-11	PIN, CONNECTOR 4P			
CN702	1-695-915-11	TAB (CONTACT)			
CN703	*1-564-509-11	PLUG, CONNECTOR 6P			
		< DIODE >			
D702	8-719-991-33	DIODE 1SS133T-77			
D703	1-535-465-11	DIODE 1SS133T-77			
D704	1-535-465-11	DIODE 1SS133T-77			
D705	1-535-465-11	DIODE 1SS133T-77			
D706	8-719-991-33	DIODE 1SS133T-77			
D707	8-719-991-33	DIODE 1SS133T-77			
D708	8-719-991-33	DIODE 1SS133T-77			
D709	8-719-991-33	DIODE 1SS133T-77			
D710	8-719-991-33	DIODE 1SS133T-77			
D711	1-216-549-51	LEAD, RES, FILM 1		5%	1W
D714	8-719-991-33	DIODE 1SS133T-77			
D715	8-719-991-33	DIODE 1SS133T-77			
D716	8-719-991-33	DIODE 1SS133T-77			
D717	8-719-991-33	DIODE 1SS133T-77			
D718	8-719-991-33	DIODE 1SS133T-77			
D719	8-719-991-33	DIODE 1SS133T-77			
		< CRT SOCKET >			
J701	⚠ 1-526-990-21	SOCKET, CRT			
		< COIL >			
L704	1-408-609-41	INDUCTOR	33UH		
		< TRANSISTOR >			
Q702	8-729-119-78	TRANSISTOR 2SC2785-HFE			
Q703	8-729-906-70	TRANSISTOR BF871-127			
Q704	8-729-200-17	TRANSISTOR BF421L-AMMO			
Q705	8-729-119-78	TRANSISTOR 2SC2785-HFE			
Q706	8-729-906-70	TRANSISTOR BF871-127			
Q707	8-729-200-17	TRANSISTOR BF421L-AMMO			
Q708	8-729-119-78	TRANSISTOR 2SC2785-HFE			
Q709	8-729-906-70	TRANSISTOR BF871-127			
Q710	8-729-200-17	TRANSISTOR BF421L-AMMO			
		< RESISTOR >			
R701	1-247-895-91	CARBON	470K	5%	1/4W
R704	1-216-486-00	METAL OXIDE	8.2K	5%	3W F
R705	1-260-103-11	CARBON	2.2K	5%	1/2W
R706	1-247-815-91	CARBON	220	5%	1/4W
R707	1-247-815-91	CARBON	220	5%	1/4W
R708	1-247-791-91	CARBON	22	5%	1/4W
R709	1-202-844-00	SOLID	330K	10%	1/2W
R711	1-247-843-11	CARBON	3.3K	5%	1/4W
R712	1-260-103-11	CARBON	2.2K	5%	1/2W
R713	1-247-875-91	CARBON	68K	5%	1/4W
R714	1-216-486-00	METAL OXIDE	8.2K	5%	3W F
R715	1-249-417-11	CARBON	1K	5%	1/4W
R716	1-247-815-91	CARBON	220	5%	1/4W
R717	1-247-815-91	CARBON	220	5%	1/4W
R718	1-202-814-11	SOLID	33K	10%	1/2W
R719	1-247-791-91	CARBON	22	5%	1/4W
R720	1-247-843-11	CARBON	3.3K	5%	1/4W
R722	1-202-848-00	SOLID	680K	10%	1/2W
R723	1-249-417-11	CARBON	1K	5%	1/4W
R724	1-260-131-11	CARBON	470K	5%	1/2W
R726	1-260-103-11	CARBON	2.2K	5%	1/2W
R727	1-247-815-91	CARBON	220	5%	1/4W
R728	1-216-351-00	METAL OXIDE	1.5	5%	1W F
R729	1-247-815-91	CARBON	220	5%	1/4W
R730	1-247-791-91	CARBON	22	5%	1/4W
R731	1-247-843-11	CARBON	3.3K	5%	1/4W
R733	1-247-823-91	CARBON	470	5%	1/4W
R734	1-247-807-31	CARBON	100	5%	1/4W
R735	1-247-823-91	CARBON	470	5%	1/4W
R736	1-216-486-00	METAL OXIDE	8.2K	5%	3W F
R737	1-247-891-91	CARBON	330K	5%	1/4W
R739	1-249-417-11	CARBON	1K	5%	1/4W
R740	1-247-823-91	CARBON	470	5%	1/4W
R741	1-202-549-00	SOLID	100	20%	1/2W
R744	1-249-421-11	CARBON	2.2K	5%	1/4W
R745	1-249-421-11	CARBON	2.2K	5%	1/4W
R746	1-249-421-11	CARBON	2.2K	5%	1/4W

C **VM**

REF. NO.	PART.NO	DESCRIPTION			REMARK
		< VARIABLE RESISTOR >			
RV701	1-230-641-11	RES, ADJ, METAL GLAZE 2.2M			
RV702	1-241-656-21	RES, ADJ, METAL FILM 110M			
**********					
	*A-1644-090-A	VM BOARD, COMPLETE (KV-29K5 ONLY)			
		**********			
		< CAPACITOR >			
C1701	1-126-933-11	ELECT	100MF	20%	16V
C1702	1-128-551-11	ELECT	22MF	20%	25V
C1703	1-126-933-11	ELECT	100MF	20%	16V
C1704	1-107-357-11	FILM	0.47MF	5%	100V
C1705	1-107-638-11	ELECT	33MF	20%	160V
C1706	1-104-999-11	FILM	0.1MF	5%	200V
C1707	1-136-207-11	FILM	0.047MF	10%	250V
C1708	1-137-364-11	FILM	0.001MF	5%	50V
C1709	1-137-364-11	FILM	0.001MF	5%	50V
C1710	1-163-009-11	CERAMIC CHIP	0.001MF	10%	50V
C1720	1-107-667-11	ELECT	2.2MF	20%	160V
C1721	1-136-207-11	FILM	0.047MF	10%	250V
C1722	1-126-934-11	ELECT	220MF	20%	16V
C1723	1-161-830-00	CERAMIC	0.0047MF		500V
C1725	1-126-967-11	ELECT	47MF	20%	16V
C1726	1-126-934-11	ELECT	220MF	20%	16V
C1803	1-163-037-11	CERAMIC CHIP	0.022MF	10%	50V
C1804	1-126-964-11	ELECT	10MF	20%	50V
C1805	1-137-366-11	FILM	0.0022MF	5%	50V
C1841	1-136-155-00	FILM	0.015MF	5%	50V
C1844	1-130-959-00	FILM	0.047MF	10%	400V
C1845	1-136-175-00	FILM	0.68MF	5%	50V
C1901	1-163-251-11	CERAMIC CHIP	100PF	5%	50V
C1902	1-137-374-11	FILM	0.047MF	5%	50V
C1903	1-126-964-11	ELECT	10MF	20%	50V
C1904	1-137-366-11	FILM	0.0022MF	5%	50V
C1905	1-137-374-11	FILM	0.047MF	5%	50V
C1906	1-164-232-11	CERAMIC CHIP	0.01MF	10%	50V
C1911	1-136-189-00	FILM	0.1MF	10%	250V
C1912	1-129-702-00	FILM	0.001MF	5%	630V
C1913	1-129-703-00	FILM	0.0012MF	5%	630V
C1914	1-102-157-00	CERAMIC	560PF	10%	500V
C1915	1-137-102-11	FILM	0.022MF	10%	250V
C1951	1-126-964-11	ELECT	10MF	20%	50V
C1952	1-164-232-11	CERAMIC CHIP	0.01MF	10%	50V
C1953	1-136-165-00	FILM	0.1MF	5%	50V
C1954	1-164-232-11	CERAMIC CHIP	0.01MF	10%	50V
C1955	1-136-165-00	FILM	0.1MF	5%	50V
C1956	1-126-964-11	ELECT	10MF	20%	50V
C1957	1-126-964-11	ELECT	10MF	20%	50V
C1958	1-136-173-00	FILM	0.47MF	5%	50V
C1959	1-107-714-11	ELECT	10MF	20%	50V
C1960	1-107-636-11	ELECT	10MF	20%	160V
		< CONNECTOR >			
CN1705	*1-564-510-11	PLUG, CONNECTOR 7P			
CN1718	1-774-418-11	CONNECTOR, BOARD TO BOARD 8P			
CN1801	*1-564-506-11	PLUG, CONNECTOR 3P			
CN1803	1-564-507-71	PIN, CONNECTOR 4P			
CN1809	1-508-784-12	PIN, CONNECTOR 5MM PITCH 1P			
		< DIODE >			
D1701	8-719-991-33	DIODE 1SS133T-77			
D1702	8-719-110-88	DIODE RD39ES-B2			
D1703	8-719-110-88	DIODE RD39ES-B2			
D1801	8-719-110-17	DIODE RD10ESB2			
D1802	8-719-110-17	DIODE RD10ESB2			
D1803	8-719-110-17	DIODE RD10ESB2			
D1840	8-719-302-43	DIODE EL1Z			
D1841	8-719-991-33	DIODE 1SS133T-77			
D1901	8-719-991-33	DIODE 1SS133T-77			
D1902	8-719-991-33	DIODE 1SS133T-77			
D1903	8-719-991-33	DIODE 1SS133T-77			
D1904	8-719-991-33	DIODE 1SS133T-77			
D1905	8-719-923-60	DIODE MTZJ-T-77-9.1A			
D1906	8-719-970-87	DIODE ERA38-06			
D1907	8-719-970-87	DIODE ERA38-06			
D1908	8-719-300-33	DIODE RU-3AM			
D1909	8-719-991-33	DIODE 1SS133T-77			
D1910	8-719-991-33	DIODE 1SS133T-77			
		< IC >			
IC1801	8-759-603-37	IC M5216P			
IC1901	8-759-450-95	IC LM393N			
IC1902	8-759-008-70	IC LM358N			
		< COIL >			
L1701	1-408-603-31	INDUCTOR	10UH		
L1702	1-408-597-31	INDUCTOR	3.3UH		
L1703	1-408-603-31	INDUCTOR	10UH		
L1704	1-408-417-00	INDUCTOR	47UH		
L1841	1-406-674-11	INDUCTOR	0UH		
L1843	1-406-989-21	INDUCTOR	0UH		
L1901	1-406-677-11	INDUCTOR	0UH		

REF. NO.	PART.NO	DESCRIPTION				REMARK
		< TRANSISTOR >				
Q1701	8-729-120-28	TRANSISTOR 2SC1623-L5L6				
Q1702	8-729-120-28	TRANSISTOR 2SC1623-L5L6				
Q1703	8-729-017-05	TRANSISTOR 2SA1837				
Q1704	8-729-119-78	TRANSISTOR 2SC2785-HFE				
Q1706	8-729-017-06	TRANSISTOR 2SC4793				
Q1708	8-729-216-22	TRANSISTOR 2SA1162-G				
Q1709	8-729-120-28	TRANSISTOR 2SC1623-L5L6				
Q1710	8-729-620-06	TRANSISTOR 2SC3052-EF				
Q1840	8-729-120-28	TRANSISTOR 2SC2412K-T-146-QR				
Q1841	8-729-931-45	TRANSISTOR IRF614-LF				
Q1901	8-729-620-06	TRANSISTOR 2SC3052-EF				
Q1902	8-729-620-06	TRANSISTOR 2SC3052-EF				
Q1903	8-729-043-95	TRANSISTOR 2SC3840(3)				
Q1904	8-729-620-06	TRANSISTOR 2SC3052-EF				
Q1905	8-729-620-06	TRANSISTOR 2SC3052-EF				
Q1906	8-729-119-80	TRANSISTOR 2SC2688-LK				
Q1907	8-729-119-80	TRANSISTOR 2SC2688-LK				
		< RESISTOR >				
R1701	1-216-049-00	RES,CHIP	1K	5%	1/10W	
R1702	1-216-049-00	RES,CHIP	1K	5%	1/10W	
R1703	1-216-057-00	RES,CHIP	2.2K	5%	1/10W	
R1704	1-216-045-00	RES,CHIP	680	5%	1/10W	
R1705	1-247-815-91	CARBON	220	5%	1/4W	
R1706	1-247-815-91	CARBON	220	5%	1/4W	
R1708	1-216-039-00	RES,CHIP	390	5%	1/10W	
R1712	1-260-311-11	CARBON	39	5%	1/2W	
R1713	1-249-384-11	CARBON	1.8	5%	1/4W	F
R1714	1-249-414-11	CARBON	560	5%	1/4W	F
R1715	1-249-432-11	CARBON	18K	5%	1/4W	
R1716	1-249-417-11	CARBON	1K	5%	1/4W	F
R1717	1-215-913-11	METAL OXIDE	220	5%	3W	F
R1718	1-249-432-11	CARBON	18K	5%	1/4W	
R1719	1-249-384-11	CARBON	1.8	5%	1/4W	F
R1720	1-249-400-11	CARBON	39	5%	1/4W	F
R1721	1-249-414-11	CARBON	560	5%	1/4W	
R1722	1-216-017-91	RES,CHIP	47	5%	1/10W	
R1724	1-216-017-91	RES,CHIP	47	5%	1/10W	
R1725	1-215-887-00	METAL OXIDE	150	5%	2W	F
R1728	1-216-041-00	RES,CHIP	470	5%	1/10W	
R1729	1-216-041-00	RES,CHIP	470	5%	1/10W	
R1730	1-216-049-00	RES,CHIP	1K	5%	1/10W	
R1731	1-249-411-11	CARBON	330	5%	1/4W	
R1751	1-216-049-71	RES,CHIP	1K	5%	1/10W	
R1752	1-216-049-71	RES,CHIP	1K	5%	1/10W	
R1753	1-216-049-71	RES,CHIP	1K	5%	1/10W	
R1805	1-216-073-00	RES,CHIP	10K	5%	1/10W	
R1806	1-216-105-91	RES,CHIP	220K	5%	1/10W	
R1807	1-216-073-00	RES,CHIP	10K	5%	1/10W	
R1808	1-216-073-00	RES,CHIP	10K	5%	1/10W	
R1809	1-216-073-00	RES,CHIP	10K	5%	1/10W	
R1810	1-216-073-00	RES,CHIP	10K	5%	1/10W	
R1841	1-216-097-00	RES,CHIP	100K	5%	1/10W	
R1842	1-216-057-00	RES,CHIP	2.2K	5%	1/10W	
R1843	1-260-087-11	CARBON	100	5%	1/2W	
R1844	1-216-061-00	RES,CHIP	3.3K	5%	1/10W	
R1846	1-260-087-11	CARBON	100	5%	1/2W	
R1847	1-215-886-11	METAL OXIDE	100	5%	2W	F
R1848	1-215-875-11	METAL OXIDE	10K	5%	1W	F
R1901	1-249-441-11	CARBON	100K	5%	1/4W	
R1902	1-216-073-00	RES,CHIP	10K	5%	1/10W	
R1903	1-216-073-00	RES,CHIP	10K	5%	1/10W	
R1904	1-216-073-00	RES,CHIP	10K	5%	1/10W	
R1905	1-216-097-00	RES,CHIP	100K	5%	1/10W	
R1906	1-216-073-00	RES,CHIP	10K	5%	1/10W	
R1907	1-216-097-00	RES,CHIP	100K	5%	1/10W	
R1908	1-216-033-00	RES,CHIP	220	5%	1/10W	
R1909	1-215-493-00	METAL	1M	1%	1/4W	
R1910	1-216-295-00	SHORT	0			
R1911	1-216-073-00	RES,CHIP	10K	5%	1/10W	
R1912	1-216-121-91	RES,CHIP	1M	5%	1/10W	
R1913	1-216-049-00	RES,CHIP	1K	5%	1/10W	
R1914	1-216-057-00	RES,CHIP	2.2K	5%	1/10W	
R1915	1-216-073-00	RES,CHIP	10K	5%	1/10W	
R1916	1-216-675-11	METAL CHIP	10K	0.50%	1/10W	
R1917	1-216-691-11	METAL CHIP	47K	0.50%	1/10W	
R1921	1-215-896-51	METAL OXIDE	4.7K	5%	2W	F
R1922	1-215-875-11	METAL OXIDE	10K	5%	1W	F
R1923	1-216-097-00	RES,CHIP	100K	5%	1/10W	
R1924	1-216-097-00	RES,CHIP	100K	5%	1/10W	
R1925	1-216-097-00	RES,CHIP	100K	5%	1/10W	
R1951	1-216-073-00	RES,CHIP	10K	5%	1/10W	
R1952	1-216-065-00	RES,CHIP	4.7K	5%	1/10W	
R1953	1-216-081-00	RES,CHIP	22K	5%	1/10W	
R1954	1-216-097-00	RES,CHIP	100K	5%	1/10W	
R1955	1-216-089-00	RES,CHIP	47K	5%	1/10W	
R1956	1-216-113-00	RES,CHIP	470K	5%	1/10W	
R1957	1-216-073-00	RES,CHIP	10K	5%	1/10W	
R1958	1-216-065-00	RES,CHIP	4.7K	5%	1/10W	
R1959	1-216-065-00	RES,CHIP	4.7K	5%	1/10W	
R1960	1-216-113-00	RES,CHIP	470K	5%	1/10W	
R1961	1-216-097-00	RES,CHIP	100K	5%	1/10W	

The components identified by shading and marked ⚠ are critical for safety
Replace only with the part number specified.

VM **H1** **S1**

REF. NO.	PART.NO	DESCRIPTION	REMARK
R1962	1-216-101-00	RES,CHIP 150K 5% 1/10W	
R1963	1-216-081-00	RES,CHIP 22K 5% 1/10W	
R1964	1-216-057-00	RES,CHIP 2.2K 5% 1/10W	
R1965	1-216-081-00	RES,CHIP 22K 5% 1/10W	
R1966	1-216-085-00	RES,CHIP 33K 5% 1/10W	
R1967	1-215-876-00	METAL OXIDE 15K 5% 1W	F
R1968	1-249-416-11	CARBON 820 5% 1/4W	
R1969	1-215-870-11	METAL OXIDE 1.5K 5% 1W	F
		< TRANSFORMER >	
T1901	1-424-584-11	TRANSFORMER, DYNAMIC FOCUS	
**********			
	*A-1646-160-A	H1 BOARD, COMPLETE	
		**********	
		< CAPACITOR >	
C902	1-137-372-11	FILM 0.022MF 5% 50V	
C903	1-137-372-11	FILM 0.022MF 5% 50V	
C904	1-104-665-11	ELECT 100MF 20% 25V	
C905	1-126-964-11	ELECT 10MF 20% 50V	
C907	1-126-960-11	ELECT 1MF 20% 50V	
C908	1-126-960-11	ELECT 1MF 20% 50V	
C911	1-102-074-00	CERAMIC 0.001MF 10% 50V	
C912	1-102-074-00	CERAMIC 0.001MF 10% 50V	
		< CONNECTOR >	
CN603	⚠ *1-580-844-11	PIN, CONNECTOR (POWER)	
CN604	⚠ *1-691-291-11	PIN, CONNECTOR (PC BOARD) 5P	
CN900	1-779-947-11	TERMINAL BLOCK S	
CN906	*1-564-511-11	PLUG, CONNECTOR 8P	
CN907	*1-564-510-11	PLUG, CONNECTOR 7P	
CN908	*1-564-508-11	PLUG, CONNECTOR 5P	
		< DIODE >	
D901	8-719-302-45	DIODE SEL1210S-D	
	4-203-258-01	HOLDER LED (D901)	
D902	8-719-929-15	DIODE HZS9.1NBZ	
D903	8-719-929-15	DIODE HZS9.1NBZ	
D904	8-719-109-97	DIODE RD6.8ES-B2	
D905	8-719-109-97	DIODE RD6.8ES-B2	
D906	8-719-923-60	DIODE MTZJ-T-77-9.1A	
D907	8-719-923-60	DIODE MTZJ-T-77-9.1A	
D908	8-719-923-60	DIODE MTZJ-T-77-9.1A	
		< FUSE >	
F601	⚠ 1-576-231-21	FUSE (H.B.C.) 4AMP 250V	
	⚠ 1-535-725-11	FUSE HOLDER (F601)	
		< IC >	
IC900	8-742-014-11	HYB IC SBX1981-51	
		< SOCKET >	
J900	1-764-606-11	JACK	
		< COIL >	
L900	1-412-533-21	INDUCTOR 47UH	
L901	1-412-533-21	INDUCTOR 47UH	
L902	1-408-603-31	INDUCTOR 10UH	
L903	1-408-603-31	INDUCTOR 10UH	
		< RESISTOR >	
R900	1-247-807-31	CARBON 100 5% 1/4W	
R901	1-249-426-11	CARBON 5.6K 5% 1/4W	
R902	1-249-437-11	CARBON 47K 5% 1/4W	
R903	1-260-091-11	CARBON 220 5% 1/2W	
R904	1-260-091-11	CARBON 220 5% 1/2W	
R908	1-249-401-11	CARBON 47 5% 1/4W	
R909	1-247-895-91	CARBON 470K 5% 1/4W	
R910	1-247-895-91	CARBON 470K 5% 1/4W	
R911	1-535-465-11	LEAD, JUMPER (5.0MM)	
R912	1-249-422-11	CARBON 2.7K 5% 1/4W	
R913	1-249-429-11	CARBON 10K 5% 1/4W	
R914	1-247-863-91	CARBON 22K 5% 1/4W	
		< SWITCH >	
S601	⚠ 1-571-433-21	SWITCH, PUSH (AC POWER)	
S900	1-692-979-21	SWITCH, TACTILE	
S901	1-692-979-21	SWITCH, TACTILE	
S902	1-692-979-21	SWITCH, TACTILE	
**********			
	*A-1652-055-A	S1 BOARD,COMPLETE (KV-25K5A/25K5D/	
		********** 29K5A/29K5D)	
	*A-1652-059-A	S1 BOARD,COMPLETE (KV-25K5B/25K5B)	
		**********	
	*A-1652-054-A	S1 BOARD,COMPLETE (KV-25K5E/25K5U/	
		********** 29K5E/29K5U)	
		< CAPACITOR >	
C1103	1-164-232-11	CERAMIC CHIP 0.01MF 10% 50V	

S1

REF. NO.	PART.NO	DESCRIPTION	REMARK
C1106	1-164-232-11	CERAMIC CHIP 0.01MF 10% 50V	
C1107	1-164-232-11	CERAMIC CHIP 0.01MF 10% 50V	
C1108	1-164-232-11	CERAMIC CHIP 0.01MF 10% 50V	
C1109	1-104-664-11	ELECT 47MF 20% 25V	
C1112	1-163-001-11	CERAMIC CHIP 220PF 10% 50V	
C1113	1-104-664-11	ELECT 47MF 20% 25V	
C1114	1-163-001-11	CERAMIC CHIP 220PF 10% 50V	
C1115	1-104-664-11	ELECT 47MF 20% 25V	
C1118	1-164-005-11	CERAMIC CHIP 0.47MF 25V	(KV-25K5A/25K5D/25K5E/25K5U/29K5A/29K5D/29K5E/29K5U)
	1-162-637-11	CERAMIC CHIP 0.47MF 16V	(KV-25K5B/29K5B)
C1120	1-164-005-11	CERAMIC CHIP 0.47MF 25V	
C1122	1-104-664-11	ELECT 47MF 20% 25V	
C1123	1-164-004-11	CERAMIC CHIP 0.1MF 10% 25V	
C1124	1-163-251-11	CERAMIC CHIP 100PF 5% 50V	
C1127	1-163-235-11	CERAMIC CHIP 22PF 5% 50V	(KV-25K5A/25K5D/29K5A/29K5D)
	1-163-239-11	CERAMIC CHIP 33PF 5% 50V	(KV-25K5B/25K5E/25K5U/29K5B/29K5E/29K5U)
C1128	1-163-239-11	CERAMIC CHIP 33PF 5% 50V	
C1129	1-163-989-11	CERAMIC CHIP 0.033MF 10% 25V	(KV-25K5B/25K5E/25K5U/29K5B/29K5E/29K5U)
C1130	1-110-501-11	CERAMIC CHIP 0.33MF 10% 16V	(KV-25K5B/25K5E/25K5U/29K5B/29K5E/29K5U)
C1131	1-164-005-91	CERAMIC CHIP 0.47MF 25V	(KV-25K5A/25K5B/25K5D/29K5A/29K5B/29K5D)
C1132	1-104-664-11	ELECT 47MF 20% 25V	
C1133	1-164-004-11	CERAMIC CHIP 0.1MF 10% 25V	
C1135	1-163-117-00	CERAMIC CHIP 100PF 5% 50V	(KV-25K5B/29K5B)
C1137	1-104-664-11	ELECT 47MF 20% 25V	(KV-25K5B/29K5B)
C1138	1-163-109-00	CERAMIC CHIP 47PF 5% 50V	(KV-25K5B/29K5B)
C1143	1-163-005-11	CERAMIC CHIP 470PF 10% 50V	
C1144	1-163-005-11	CERAMIC CHIP 470PF 10% 50V	
C1145	1-163-077-00	CERAMIC CHIP 0.1MF 10% 25V	
C1146	1-164-005-11	CERAMIC CHIP 0.47MF 25V	
C1147	1-164-005-11	CERAMIC CHIP 0.47MF 25V	
C1148	1-164-005-11	CERAMIC CHIP 0.47MF 25V	
C1149	1-126-960-11	ELECT 1MF 20% 50V	
C1150	1-126-960-11	ELECT 1MF 20% 50V	
C1151	1-104-664-11	ELECT 47MF 20% 25V	
C1152	1-164-004-11	CERAMIC CHIP 0.1MF 10% 25V	

REF. NO.	PART.NO	DESCRIPTION	REMARK
		< FILTER >	
CF1101	1-409-327-00	TRAP, CERAMIC (6.5MHZ)	(KV-25K5B/29K5B)
		< CONNECTOR >	
CN1101	1-766-925-11	CONNECTOR, BOARD TO BOARD 18P	
		< DIODE >	
D1101	1-216-295-00	SHORT 0	(KV-25K5A/25K5D/29K5A/29K5D)
	8-719-066-72	DIODE BB135	(KV-25K5B/25K5E/25K5U/29K5B/29K5E/29K5U)
		< FERRITE BEAD >	
FB1101	1-410-396-41	FERRITE 0.45UH	
FB1102	1-410-396-41	FERRITE 0.45UH	
FB1103	1-410-396-41	FERRITE 0.45UH	
FB1104	1-410-396-41	FERRITE 0.45UH	
FB1105	1-410-396-41	FERRITE 0.45UH	
FB1110	1-412-002-31	INDUCTOR CHIP 4.7UH	
FB1111	1-412-004-31	INDUCTOR CHIP 6.8UH	(KV-25K5A/25K5D/25K5E/25K5U/29K5A/29K5D/29K5E/29K5U)
	1-412-002-31	INDUCTOR CHIP 4.7UH	(KV-25K5B/29K5B)
FB1112	1-412-002-31	INDUCTOR CHIP 4.7UH	
FB1113	1-412-002-31	INDUCTOR CHIP 4.7UH	(KV-25K5B/29K5B)
		< IC >	
IC1101	8-759-522-62	IC TDA9870	(KV-25KA/25K5D/29K5A/29K5D)
	8-759-466-48	IC TDA9875P	(KV-25K5B/25K5E/25K5U/29K5B/29K5E/29K5U)
IC1102	8-759-998-98	IC LM358D	(KV-25K5A/25K5D/29K5A/29K5D)
	8-759-100-96	IC UPC4558G2	(KV-25K5B/25K5E/25K5U/29K5B/29K5E/29K5U)
IC1103	8-759-394-57	IC PST593C-MMP-4P	
		< COIL >	
L1101	1-408-596-31	INDUCTOR 2.7UH	(KV-25K5B/25K5E/25K5U/29K5B/29K5E/29K5U)
L1113	1-408-600-31	INDUCTOR 5.6UH	(KV-25K5B/29K5B)
L1114	1-410-671-31	INDUCTOR 47UH	
L1115	1-408-599-31	INDUCTOR 4.7UH	
L1116	1-408-599-31	INDUCTOR 4.7UH	
L1117	1-410-671-31	INDUCTOR 47UH	(KV-25K5B/29K5B)
		< TRANSISTOR >	
Q1112	8-729-620-06	TRANSISTOR 2SC3052-EF	(KV-25K5B/29K5B)

S1

REF. NO.	PART.NO	DESCRIPTION	REMARK
Q1113	8-729-620-06	TRANSISTOR 2SC3052-EF	(KV-25K5B/29K5B)
Q1114	8-729-216-22	TRANSISTOR 2SA1162-G	(KV-25K5B/29K5B)
Q1115	8-729-620-06	TRANSISTOR 2SC3052-EF	(KV-25K5B/29K5B)
		< RESISTOR >	
JR1105	1-216-295-00	SHORT 0	
JR1112	1-216-295-71	CONDUCTOR CHIP	
JR1113	1-216-295-71	CONDUCTOR CHIP	
R1101	1-216-073-00	RES,CHIP 10K 5% 1/10W	
R1102	1-216-073-00	RES,CHIP 10K 5% 1/10W	
R1103	1-216-035-00	RES,CHIP 270 5% 1/10W	
R1105	1-216-035-00	RES,CHIP 270 5% 1/10W	
R1108	1-216-057-00	RES,CHIP 2.2K 5% 1/10W	(KV-25K5A/25K5B/25K5D/29K5A/29K5B/29K5D)
R1110	1-216-025-00	RES,CHIP 100 5% 1/10W	
R1111	1-216-025-00	RES,CHIP 100 5% 1/10W	
R1113	1-216-073-00	RES,CHIP 10K 5% 1/10W	
R1116	1-216-295-00	SHORT 0	(KV25K5A/25K5D/29K5A/29K5D)
	1-216-689-11	METAL CHIP 39K. 50% 1/10W	(KV-25K5B/25K5E/25K5U/29K5B/29K5E/29K5U)
R1117	1-216-073-00	RES,CHIP 10K 5% 1/10W	(KV-25K5B/25K5E/25K5U/29K5B/29K5E/29K5U)
R1118	1-216-682-11	METAL CHIP 20K 0.50% 1/10W	(KV-25K5B/25K5E/25K5U/29K5B/29K5E/29K5U)
R1121	1-216-065-71	RES,CHIP 4.7K 5% 1/10W	
R1122	1-216-065-71	RES,CHIP 4.7K 5% 1/10W	
R1123	1-216-065-71	RES,CHIP 4.7K 5% 1/10W	
R1124	1-216-073-71	RES,CHIP 10K 5% 1/10W	
R1125	1-216-065-71	RES,CHIP 4.7K 5% 1/10W	
R1126	1-216-073-71	RES,CHIP 10K 5% 1/10W	
R1130	1-216-073-71	RES,CHIP 10K 5% 1/10W	(KV-25K5A/25K5D/29K5A/29K5D)
R1134	1-216-073-71	RES,CHIP 10K 5% 1/10W	(KV-25K5A/25K5D/29K5A/29K5D)
R1152	1-216-035-00	RES,CHIP 270 5% 1/10W	(KV-25K5B/29K5B)
R1153	1-216-025-00	RES,CHIP 100 5% 1/10W	(KV-25K5B/29K5B)
R1154	1-216-067-00	RES,CHIP 5.6K 5% 1/10W	(KV-25K5B/29K5B)
R1160	1-216-230-00	RES,CHIP 22K 5% 1/8W	(KV-25K5B/29K5B)
R1161	1-216-190-00	RES,CHIP 470 5% 1/8W	(KV-25K5B/29K5B)
R1162	1-216-061-00	RES,CHIP 3.3K 5% 1/10W	(KV-25K5B/29K5B)
R1163	1-216-230-00	RES,CHIP 22K 5% 1/8W	(KV-25K5B/29K5B)
R1164	1-216-073-00	RES,CHIP 10K 5% 1/10W	(KV-25K5B/25K5E/25K5U/29K5B/29K5E/29K5U)
R1165	1-216-295-00	SHORT 0	(KV-25K5A/25K5D/29K5A/29K5D)
R1167	1-216-025-00	RES,CHIP 100 5% 1/10W	(KV-25K5B/29K5B)
R1168	1-216-033-00	RES,CHIP 220 5% 1/10W	(KV-25K5B/29K5B)
R1169	1-216-049-00	RES,CHIP 1K 5% 1/10W	(KV-25K5B/29K5B)
R1170	1-216-001-00	RES,CHIP 10 5% 1/10W	(KV-25K5B/29K5B)
R1171	1-216-045-00	RES,CHIP 680 5% 1/10W	(KV-25K5B/29K5B)
R1172	1-216-190-00	RES,CHIP 470 5% 1/8W	(KV-25K5B/29K5B)
R1173	1-216-049-00	RES,CHIP 1K 5% 1/10W	(KV-25K5B/29K5B)
R1174	1-216-085-00	RES,CHIP 33K 5% 1/10W	
R1175	1-216-085-00	RES,CHIP 33K 5% 1/10W	
R1176	1-216-085-00	RES,CHIP 33K 5% 1/10W	
R1177	1-216-085-00	RES,CHIP 33K 5% 1/10W	
R1178	1-216-073-71	RES,CHIP 10K 5% 1/10W	
		< CRYSTAL >	
X1101	1-567-970-21	VIBRATOR, CRYSTAL	(KV-25K5A/25K5B/25K5D/29K5A/29K5B/29K5D/29K5E/29K5U)
	1-767-813-21	VIBRATOR, CRYSTAL	(KV-25K5E/25K5U)

****

The components identified by shading and marked ⚠ are critical for safety
Replace only with the part number specified.

REF. NO.	PART.NO	DESCRIPTION	REMARK
		MISCELLANEOUS	
		**********	
⚠	1-416-073-11	COIL, DEMAGNETIZATION	
			(KV-25K5A/25K5B/25K5D/25K5E/25K5U)
⚠	1-406-807-11	COIL, DEMAGNETIZATION	
			(KV-29K5A/29K5B/29K5D/29K5E/29K5U)
	1-452-032-00	MAGNET, DISC; 10MM Ø	
	1-452-094-00	MAGNET, ROTATABLE DISC; 15MM Ø	
⚠	8-453-005-21	NECK ASSY (NA297-M2)	
			(KV-29K5A/29K5B/29K5D/29K5E/29K5U)
⚠	1-453-264-11	TRANSFORMER ASSY, FLYBACK (NX-1680/U2B4)	
			(KV-25K5A/25K5B/25K5D/25K5E/25K5U)
⚠	1-453-265-11	TRANSFORMER ASSY, FLYBACK (NX-1681/U2B4)	
			(KV-29K5A/29K5B/29K5D/29K5E/29K5U)
	1-505-484-11	SPEAKER (2.6CM)	
	1-505-674-11	SPEAKER MID RANGE (8CM)	
	1-505-673-11	SPEAKER WOOFER (10CM)	
⚠	1-571-433-21	SWITCH, PUSH (AC POWER)	
⚠	1-765-286-11	CORD, POWER	(KV-25K5A/25K5B/25K5D/25K5E/
			29K5A/29K5B/29K5D/29K5E)
⚠	1-776-204-11	CORD, POWER (FILTER)	(KV-25K5U/29K5U)
	1-693-418-11	TUNER (TELE9-001A)	(KV-25K5A/25K5B/25K5D/
			25K5E/29K5A/29K5B/29K5D/29K5E)
	8-598-464-00	TUNER (FSS-BTP-AU611)	(KV-25K5U/29K5U)
⚠	8-733-254-05	PICTURE TUBE (SD-257) (M60LCS60X)	
			(KV-25K5A/25K5B/25K5D/25K5E/25K5U)
⚠	8-733-856-05	PICTURE TUBE (SD-269) (M68LCT60X)	
			(KV-29K5A/29K5B/29K5D/29K5E/29K5U)
⚠	8-451-404-23	DEFLECTION YOKE (Y25GXABA)	
			(KV-25K5A/25K5B/25K5D/25K5E/25K5U)
⚠	8-451-466-11	DEFLECTION YOKE (Y29GXC2B)	
			(KV-29K5A/29K5B/29K5D/29K5E/29K5U)
⚠	8-733-254-76	ITC	(KV-25K5A/25K5B/25K5D/25K5E/25K5U)
⚠	8-733-856-75	ITC	(KV-29K5A/29K5B/29K5D/29K5E/29K5U)

****

		ACCESSORIES AND PACKAGING MATERIALS	
		**********	
	4-395-957-01	BAG, PROTECTION	
			(KV-25K5A/25K5B/25K5D/25K5E/25K5U)
	4-029-168-01	BAG, PROTECTION	
			(KV-29K5A/29K5B/29K5D/29K5E/29K5U)
	4-203-677-01	INDIVIDUAL CARTON	
			(KV-25K5A/25K5B/25K5D/25K5E/25K5U)
	4-203-670-01	INDIVIDUAL CARTON	
			(KV-29K5A/29K5B/29K5D/29K5E/29K5U)
	4-203-678-01	CUSHION (UPPER) (ASSY)	
			(KV-25K5A/25K5B/25K5D/25K5E/25K5U)
	4-203-671-01	CUSHION (UPPER) (ASSY)	
			(KV-29K5A/29K5B/29K5D/29K5E/29K5U)
	4-203-681-01	CUSHION (LOWER) (ASSY)	
			(KV-25K5A/25K5B/25K5D/25K5E/25K5U)
	4-203-681-01	CUSHION (LOWER) (ASSY)	
			(KV-29K5A/29K5B/29K5D/29K5E/29K5U)
	4-204-064-41	MANUAL, INSTRUCTION	(KV-25K5A/29K5A)
		(ITALIAN)	
	4-204-064-51	MANUAL, INSTRUCTION	(KV-25K5B/29K5B)
		(FRENCH/GERMAN/ITALIAN/DUTCH)	
	4-204-092-11	MANUAL, INSTRUCTION	(KV-25K5D/29K5D)
		(GERMAN/GREEK/DUTCH/ENGLISH/TURKISH)	
	4-204-064-71	MANUAL, INSTRUCTION	(KV-25K5E/29K5E)
		(SPANISH)	
	4-204-064-81	MANUAL, INSTRUCTION	(KV-25K5E/29K5E)
		(FINNISH/NORWEGIAN/PORTUGUESE/DANISH/	
		SWEDISH)	
	4-204-064-61	MANUAL, INSTRUCTION	(KV-25K5U/29K5U
		(ENGLISH)	
		REMOTE COMMANDER	
		**********	
	1-475-765-11	COMMANDER STANDARD TYPE (RM-883)	

****

Sony Corporation
Sony UK
Service Promotions Dept.

English
98BP7169-1
Printed in U.K.
© 1998.2

9-974-963-01