SERVICE MANUAL

BE-3D CHASSIS

MODEL	COMMANDER	DEST.	CHASSIS NO.
KV-29F3A	RM-862	Italian	SCC-K05N-A
KV-29F3B	RM-862	French	SCC-K01Q-A
KV-29F3D	RM-862	AEP	SCC-K07R-A
KV-29F3E	RM-862	Spanish	SCC-K06Q-A
KV-29F3K	RM-862	OIRT	SCC-K20E-A
KV-29F3R	RM-862	OIRT	SCC-K20F-A
KV-29F3U	RM-862	UK	SCC-K04L-A

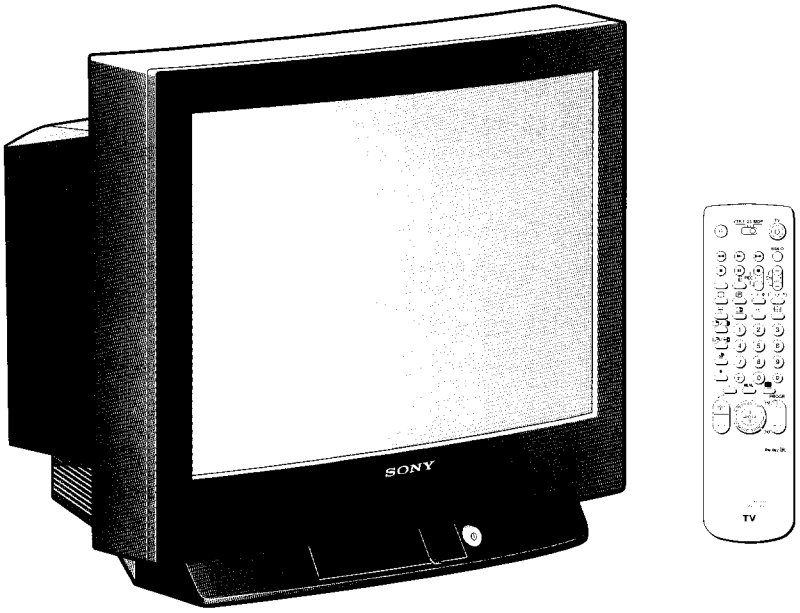

MICROFILM

TRINITRON® COLOR TV

SONY®

ITEM MODEL	Television System	Channel Coverage	Colour System
Italian	B/G/H	VHF: E2-E12, S1-S20, A-H, H1,H2 UHF: E21-E69	PAL NTSC3.58/4.43 (video input only)
French	B/G/H, D/K, L, I	L SECAM VHF: F2-F10 UHF: F21-F69 TV CABLE TV (1) VHF: B-Q UHF: S21-S44 PAL B/G/H VHF: E2-E12 UHF: E21-E69 CABLE TV (1) : S1-S41 CABLE TV (2) : S01-S05, M1-M10, U1-U10 ITALIA VHF: A-H, H1, H2 PAL I UHF: B21-B69 D/K VHF: R01-R20 UHF: B21-B69	PAL, SECAM NTSC3.58/4.43 (video input only)
AEP	B/G/H, D/K	B/G/H VHF: E2-E12 UHF: S1-S20 CABLE TV (1) : S1-S41 CABLE TV (2) : S01-S05, M1-M10, U1-U10 ITALIA VHF: A-H, H1, H2 D/K VHF: R01-R20 UHF: B21-B69	PAL, SECAM NTSC3.58/4.43 (video input only)
Spanish	B/G/H, D/K	PAL B/G/H VHF: E2-E12 UHF: E21-E69 CABLE TV (1) : S1-S41 CABLE TV (2) : S01-S05, M1-M10, U1-U10 ITALIA VHF: A-H, H1, H2 D/K VHF: R01-R20 UHF: B21-B69	PAL, SECAM NTSC3.58/4.43 (video input only)
OIRT	B/G/H, D/K	B/G/H VHF: E2-E12 UHF: E21-E69 CABLE TV (1) : S1-S41 CABLE TV (2) : S01-S05, M1-M10, U1-U10 ITALIA VHF: A-H, H1, H2 D/K VHF: R01-R12 UHF: R21-R69	PAL, SECAM NTSC3.58/4.43 (video input only)
UK	I	UHF: U21-U69	PAL NTSC3.58/4.43 (video input only)

MODEL	29F3A	29F3B	29F3D	29F3E	29F3K	29F3R	29F3U
Power consumption	101W	127W	127W	127W	194W	194W	194W

SPECIFICATIONS

Picture Tube — Super Trinitron
Approx. 72 cm (29 inches)
(Approx. 68 cm picture measured diagonally)
110° -deflection

Rear/Front Terminals

[REAR]

1 21-pin Euro connector (CENELEC standard)
- Inputs for audio / video signals
- Inputs for RGB
- Outputs for TV audio and video signals

2/S 2, 21-pin Euro connector (CENELEC standard)
- Inputs for audio / video signals
- Inputs for S video
- Outputs for TV audio and video signals (selectable)

Audio outputs - phono jacks
Left/Right Speaker Terminals
Surround Speaker Terminals
Sub-woofer Speaker Terminal

[FRONT]

3 , Video input - phono jack
3 , Audio inputs - phono jacks
3 , S video input - 4 pin DIN
Stereo minijack - headphone jack

Sound output
Left/Right — 2x10W (RMS)
2x20W (music power)
Centre — 2x2.5W (RMS)
2x5W (music power)
Surround — 2x5W (RMS)
2x10W (music power
Sub-woofer — 10W (RMS)
20W (music power)
Dimensions — 660x615x520 mm approx.
Weight — Approx. 49.0 kg (with speakers)
Supplied accessories
RM-862 Remote Commander (1)
Batteries R6 (2)
Left Speaker (1)
Right Speaker (1)
Surround Speakers (2)
Surround Speakers Leads (2)
Sub-woofer Speaker (1)
Other features — Fastext, NICAM
Dolby Pro Logic

[RM-862]

Remote control system	Infrared control
Power requirements	3V dc (2 batteries) R6 (size AA)
Dimensions	Approx. 210x56x24 mm (w/h/d)
Weight	Approx. 110g (Not including battery)

Design and specifications are subject to change without notice.

Item \ Model name	KV-29F3A	KV-29F3B	KV-29F3D	KV-29F3E	KV-29F3K KV-29F3R	KV-29F3U
PIP	OFF	OFF	OFF	OFF	OFF	OFF
MPIP	OFF	OFF	OFF	OFF	OFF	OFF
Rotation Coil	OFF	OFF	OFF	OFF	OFF	OFF
IQ Picture	ON	ON	ON	ON	ON	ON
Scart 1	ON	ON	ON	ON	ON	ON
Scart 2	ON	ON	ON	ON	ON	ON
Scart 3	OFF	OFF	OFF	OFF	OFF	OFF
AKB in 16:9 mode	ON	ON	ON	ON	ON	ON
TXT	ON	ON	ON	ON	ON	ON
FLOF	ON	ON	ON	ON	ON	ON
TOP	ON	ON	ON	ON	ON	ON
Norm B/G/H	ON	ON	ON	ON	ON	OFF
Norm I	OFF	ON	OFF	OFF	OFF	ON
Norm D/K	OFF	ON	ON	ON	ON	OFF
Norm L	OFF	ON	OFF	OFF	OFF	OFF
Language Preset	Italian	French	German	Spanish	OIRT	English

WARNING (KV-29F3U only)

The flexible mains lead is supplied connected to a **B.S. 1363** fused plug having a fuse of **5 AMP** capacity. Should the fuse need to be replaced, use a **5 AMP FUSE** approved by **ASTA** to **BS 1362**, ie one that carries the ASTA mark.
IF THE PLUG SUPPLIED WITH THIS APPLIANCE IS NOT SUITABLE FOR YOUR SOCKET OUTLETS IN YOUR HOME.
IT SHOULD BE CUT OFF AND AN APPROPRIATE PLUG FITTED.
THE PLUG SEVERED FROM THE MAINS LEAD MUST BE DESTROYED AS A PLUG WITH BARED WIRES IS DANGEROUS IF ENGAGED IN A LIVE SOCKET OUTLET.
When an alternative type of plug is used it should be fitted with a **5 AMP FUSE**, otherwise the circuit should be protected by a **5 AMP FUSE** at the distribution board.

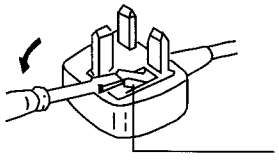

How to replace the fuse.
Open the fuse compartment with the screwdriver blade and replace the fuse.

21 pin connector (1, 2 / S 2)

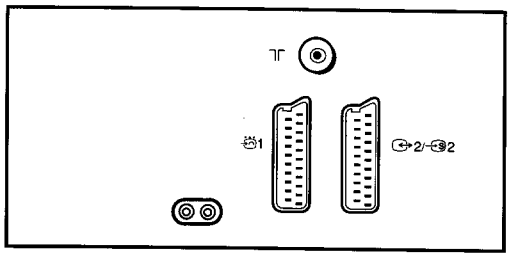

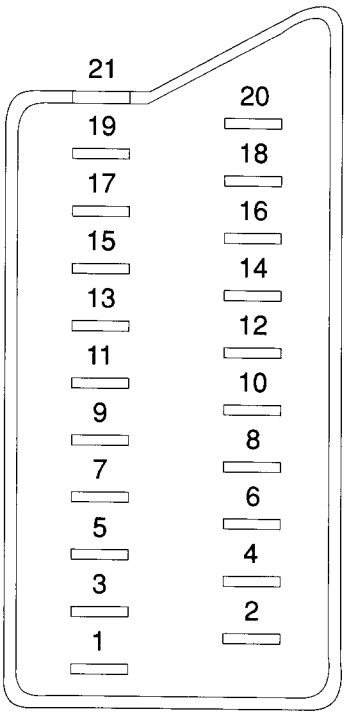

Pin No.	1	2	4	Signal	Signal Level
1	○	○	○	Audio output B (Right)	Standard level : 0.5V rms Output impedance : Less than 1k ohms*
2	○	○	○	Audio input B (Right)	Standard level : 0.5V rms Output impedance : More than 10k ohms*
3	○	○	○	Audio output A (Left)	Standard level : 0.5V rms Output impedance : Less than 1k ohm*
4	○	○	○	Ground (Audio)	
5	○	○	○	Ground (Blue)	
6	○	○	○	Audio input A (Left)	Standard level : 0.5V rms Output impedance : Less than 10k ohm*
7	○	●	●	Blue input	0.7 ± 3dB, 75 ohms, positive
8	○	○	○	Function select (AV control)	High state (9.5 - 12V) : Part mode Low state (0 - 2V) : TV mode Input impedance : More10k ohms Input capacitance : Less than 2nF
9	○	○	○	Ground (Green)	
10	○	○	○	Open	
11	○	●	●	Green	
12	○	○	○	Open	
13	○	○	○	Ground (Red)	
14	○	○	○	Ground (Blanking)	
15	○	—	—	Red input	0.7 ± 3dB, 75 ohms, positive
	—	○	○	(S signal) croma input	0.7 ± 3dB, 75 ohms, positive
16	○	●	●	Blanking input (Ys signal)	High state (1 - 3V) Low state (0 - 0.4V) Input impedance : 75 ohms
17	○	○	○	Ground (Video output)	
18	○	○	○	Ground (Video input)	
19	○	○	○	Video output	1V ± 3dB, 75ohms, positive sync : 0.3V (-3 + 10dB)
20	○	—	—	Video input	1V ± 3dB, 75ohms, positive sync : 0.3V (-3 + 10dB)
	—	○	○	Video input Y (S signal)	1V ± 3dB, 75ohms, positive sync : 0.3V (-3 + 10dB)
21	○	○	○	Common ground (plug, sheild)	

○ Connected ● Not Connected (Open) * at 20Hz - 20kHz

Pin No.	Signal	Signal Level
1	Ground	
2	Ground	
3	Y (S signal) input	1V ± 3dB 75 ohm, positive Sync. 0.3V -3 + 10dB
4	C (S signal) input	0.3V ± 3dB 75ohm, positive Sync.

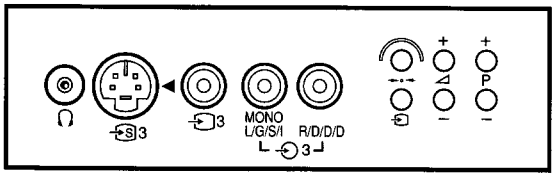

TABLE OF CONTENTS

Section	Title	Page
1. GENERAL		
	Overview	7
	Getting Started	8
	TV Operation	9
	Advanced Operations	10
	Dolby Pro Logic	17
	Teletext	18
	Optional Equipment	19
	For Your Information	21
2. DISASSEMBLY		
2-1.	Rear Cover Removal	22
2-2.	Chassis Assy Removal	22
2-3-1.	Service Position (1)	22
2-3-2.	Service Position (2)	22
2-4.	Wire Dressing	23
2-5.	A Board Removal	23
2-6.	A Extension Board	23
2-7.	A1 Extension Boards	23
2-8.	Picture Tube Removal	24
	Removal and Replacement of The Main-Bracket Bottom Plates	25
3. SET-UP ADJUSTMENTS		
3-1.	Beam Landing	26
3-2.	Convergence	27
3-3.	White Balance	29
4. CIRCUIT ADJUSTMENTS		
4-1.	Electrical Adjustments	30
4-2.	Test Mode 2 :	33
4-3.	BE-3D Self Diagnostic Software	35
5. DIAGRAMS		
5-1.	Block Diagrams	36
5-2.	Circuit Boards Location	43
5-3.	Schematic Diagrams and Printed Wiring Boards	43
	* D Board	47
	* A Board	52
	* C Board	62
	* VM Board	63
	* D2 Board	64
	* J1 Board	66
	* A1 Board	67
	* J Board	68
	* K1 Board	68
	* K2 Board	70
	* IF Board [VIF (AEP), VIF (UK)]	70
	* IF Board [VIF (FR)]	70
	IC Blocks	72
5-4.	Semiconductors	74
6. EXPLODED VIEWS		
6-1.	Chassis	76
6-2.	Picture Tube	77
6-3.	Box Speaker	78
7. ELECTRICAL PARTS LIST		79

CAUTION

SHORT CIRCUIT THE ANODE OF THE PICTURE TUBE AND THE ANODE CAP TO THE METAL CHASSIS, CRT SHIELD, OR CARBON PAINTED ON THE CRT, AFTER REMOVING THE ANODE.

ATTENTION

APRES AVOIR DECONNECTE LE CAP DE L'ANODE, COURT-CIRCUITER L'ANODE DU TUBE CATHODIQUE ET CELUI DE L'ANODE DU CAP AU CHASSIS METALLIQUE DE L'APPAREIL, OU AU COUCHE DE CARBONE PEINTE SUR LE TUBE CATHODIQUE OU AU BLINDAGE DU TUBE CATHODIQUE.

WARNING !!

AN ISOLATION TRANSFORMER SHOULD BE USED DURING ANY SERVICE TO AVOID POSSIBLE SHOCK HAZARD, BECAUSE OF LIVE CHASSIS.
THE CHASSIS OF THIS RECEIVER IS DIRECTLY CONNECTED TO THE AC POWER LINE.

ATTENTION !!

AFIN D'EVITER TOUT RISQUE D'ELECTROCUTION PROVENANT D'UN CHÁSSIS SOUS TENSION, UN TRANSFORMATEUR D'ISOLEMENT DOIT ETRE UTILISÉ LORS DE TOUT DÉPANNAGE.
LE CHÁSSIS DE CE RÉCEPTEUR EST DIRECTEMENT RACCORDÉ À L'ALIMENTATION SECTEUR.

SAFETY-RELATED COMPONENT WARNING!!

COMPONENTS IDENTIFIED BY SHADING AND MARK ⚠ ON THE SCHEMATIC DIAGRAMS, EXPLODED VIEWS AND, IN THE PARTS LIST ARE CRITICAL FOR SAFE OPERATION. REPLACE THESE COMPONENTS WITH SONY PARTS WHOSE PART NUMBERS APPEAR AS SHOWN IN THIS MANUAL OR IN SUPPLEMENTS PUBLISHED BY SONY.

ATTENTION AUX COMPOSANTS RELATIFS À LA SÉCURITÉ!!

LES COMPOSANTS IDENTIFIÈS PAR UNE TRAME ET PAR UNE MARQUE ⚠ SUR LES VUES EXPLOSÉES ET LES LISTES DE PIECES SONT D'UNE IMPORTANCE CRITIQUE PUR LA SÉCURITÉ DU FONCTIONNEMENT. NE LES REMPLACER QUE PAR DES COMPOSANTS SONY DONT LE NUMÉRO DE PIÉCE EST INDIQUÉ DANS LE PRÉSENT MANUEL OU DANS DES SUPPLÉMENTS PUBLIÉS PAR SONY.

SECTION 1 GENERAL

The operating instructions mentioned here are partial abstracts from the Operating Instrutions Manual. The page numbers of the Operating Instruction Manual remain as in the manual.

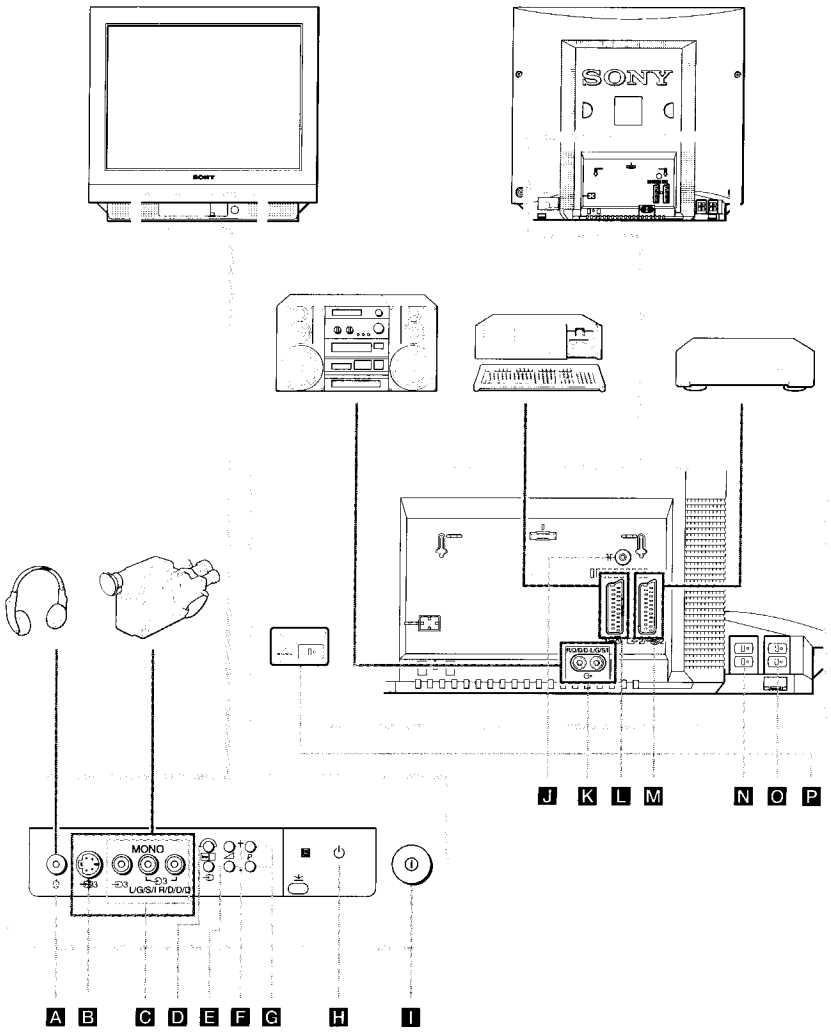

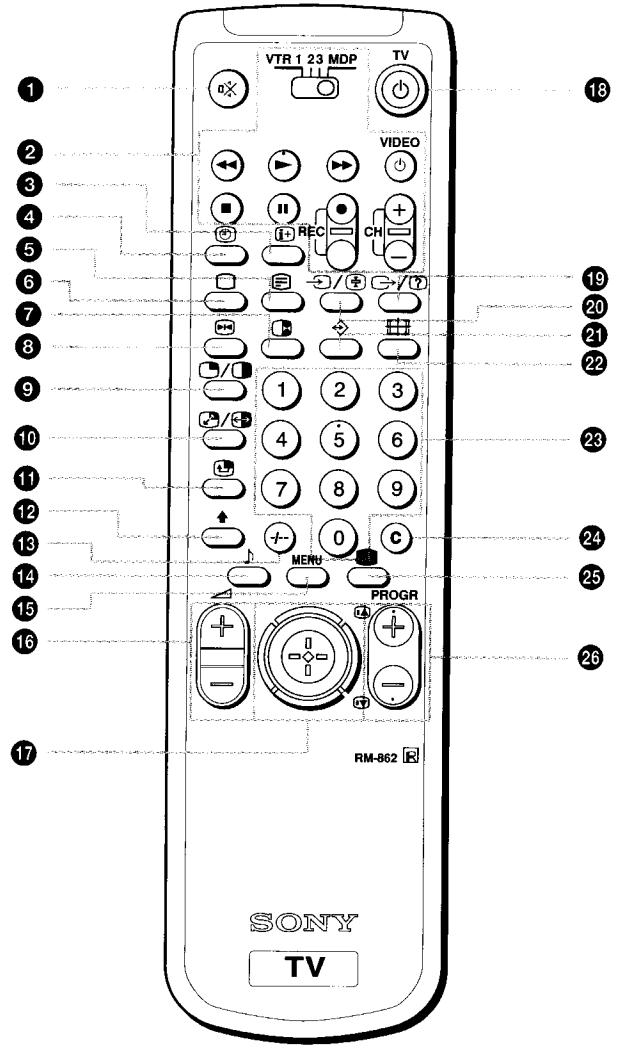

Overview

This section briefly describes the controls and the buttons on the TV set and on the Remote Commander. Please open the flap at the front of the Instruction manual for illustrations of the TV set and the Remote Commander. Letters in boxes refer to the buttons on the TV set, numbers in circles to the buttons on the Remote Commander. For more information, refer to the page numbers given next to each description.

TV-Buttons and Terminals

Reference and Symbol	Name	Refer to Page
Front of the set		
A	Headphones jack	29
B	S video input jack	29
C	Audio/video input jacks	29
D	Automatic Preset button	8
E	Input mode button	10
F	+/-	Volume control	9
G	P +/-	Programme button	9
H	Standby mode indicator	9
I	Main power switch	9
Rear of the set		
J	Aerial socket	7
K	Audio phono jacks	29
L	1	21 pin Euro connector	29
M	2/ 2	21 pin Euro connector	29
N	L/G/S/I, R/D/D/D	Left/Right speaker terminals	6
O	S	Surround speaker terminals	6
P	W/G/W/G	Sub-woofer speaker terminal	6

Remote Commander Operation

Reference and Symbol	Name	Refer to Page
1	Muting on/off button	9
2	**VCR operation**	32
	VTR123MDP	Video equipment selector	32
	◄◄ ► ►► ■ II ●	Video equipment operation buttons	32
	VIDEO, CH +/-	
3	On-screen display button	9
4	Time display button	9
5	Teletext button	10
6	TV power on/TV mode button	9, 10
7 8 9 10 11 12	No function on this set	-
13	- / - -	Double digit entering button	9
14	Sound mode button	16
15	**MENU**	Menu on/off button	11
16	+/-	Volume control button	9
17	Joystick for menu selection. Press to confirm selection (OK function)	11
18	TV	TV standby button	9
19	No function on this set Teletext: reveal button	- 27
20	Input mode button Teletext: Freezing the subpage	10 27
21	Teletext: Favourite pages button	28
22	Button to change screen format	9
23	1, 2, ... 9, 0	Number buttons	9
24	**C**	Direct channel button	10
25	Picture mode button	16
26	**PROGR** +/- Teletext: Page up/page down buttons	Programme buttons	9 10

Step 1

Connecting the Speakers

Do not switch on the TV before you connect the speakers.

Dolby (*) Pro Logic Surround normally requires 5 speakers:

Centre speaker (incorporated in the TV set)
- for anchoring the stable sound image, like dialogue, to the TV screen

Left and Right front speakers
- for the normal two channel stereo or bilingual broadcasts

Surround speakers
- for the special effects created by the surround channel

Additionally, a sub-woofer speaker is also supplied to enhance the bass performance.

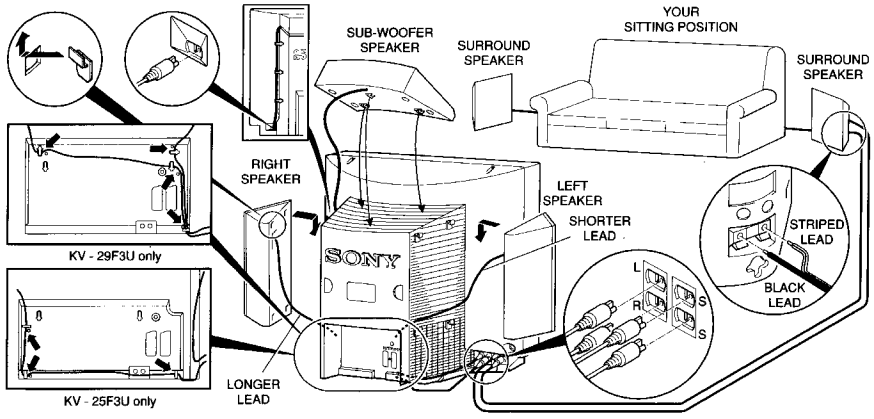

Notes:

- Connect the speakers using the leads provided. The striped lead (+) is for the red terminal of the speaker and the black lead (-) is for the black terminal.
- If you use your own speakers for the left and right channels, make sure they are at least 8Ω impedance and are magnetically shielded. Otherwise picture distortion may occur.
- For your safety, do not hold the speakers when lifting the set.

(*) Manufactured under license from Dolby Laboratories Licensing Corporation. DOLBY, the double-D symbol ⧈ and "PRO LOGIC" are trademarks of Dolby Laboratories Licensing Corporation.

Step 2

Connecting the Aerial

(If you connect a VCR, skip to step 3)

Insert the aerial plug tightly into the aerial socket ⅂ J. Use a good-quality aerial cable (not supplied), corresponding to the relevant regulations.

Step 3

Connecting a VCR

We recommend that you tune in the VCR signal to programme number "0". For details, see "Presetting Channels Manually" on page 13.

See "Connecting Optional Equipment" on page 29 for more information.

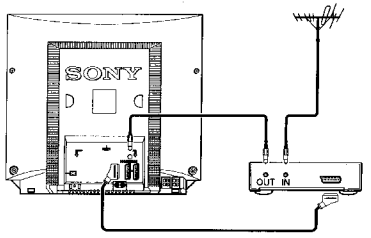

Step 4

Inserting the Batteries Into the Remote Commander

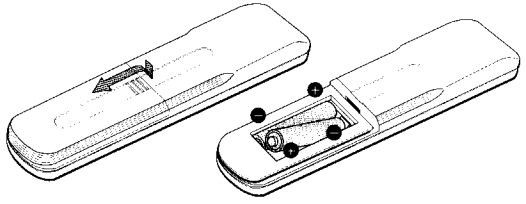

Respect your environment! Dispose of used batteries in an environmentally friendly way.

Step 5

Presetting Channels Automatically

With this function, the TV can automatically search and store up to 100 different channel numbers.

If you prefer manual presetting, refer to "Presetting Channels Manually" on page 13.

1 Plug into mains.
Press the power switch ⏻ I on the TV set.

2 Press and hold the button ▶▶| D on the TV set until the automatic menu is displayed and the search starts.

After all available channels are stored, the normal TV picture is shown.

Note: Channels are automatically stored as follows:

Programme 1	BBC1
Programme 2	BBC2
Programme 3	ITV
Programme 4	CH4 or S4C
Programme 5	CH5 (If available in your area)

TV Operation

This section explains functions used whilst watching TV. Most operations are carried out using the remote commander (numbers in circles). All basic functions are also available on the TV set (letters in boxes). Open the flap at the front of the Instruction Manual to see the illustrations of the Remote Commander and the TV set.

To	Press
Switch on	⏻ I on TV
Switch off temporarily	⏻ 18 TV is now in standby mode and ⏻ H indicator on TV lights up.
Switch on from standby mode	▭ 6, PROGR +/- 26 G or any number button 23
Switch off completely	⏻ I on TV To save energy, switch off your TV completely when TV is not in use.
Select programmes	PROGR +/- 26 G or number buttons 23 For double digit number, press -/- - 13 then the number e.g. For 23, press -/- - 13 then 2 and 3.
Display on screen indications	i+ 3. Press again to make the indications disappear.
Adjust the volume	🔊 + or - 16 F
Mute the sound	🔇 1. Press again to restore the sound.
Display the time (only available when teletext is broadcast)	⏲ 4. Press again to make the display disappear.
View programmes in 16:9 mode	▭ 22. Press again to return to 4:3 mode.

TV Operation (continued)

To	Press
Tune in a channel temporarily	C ㉔. The indication "C" appears. Enter the double digit number. e.g. For 21, press 2 then 1.
View video input picture (see page 30 for detailed information)	⇨ ⑳ E repeatedly until the desired video input appears. Press ▢ ⑥ to restore the TV picture.
View teletext (see page 27 for detailed information)	
Switch on	▤ ⑤
Select a page	three number buttons ㉓ or ▤▲ ㉖ (for next page) or ▤▼ ㉖ (for previous page).
Use fastext	Push joystick ⑰ to select a colour.
Switch off	▢ ⑥

Adjusting and Setting the TV Using the Menu

You can adjust and set various functions on the TV using the following remote commander buttons:

1 Press MENU ⑮ to switch menu on/off.
2 Use the joystick ⑰ as follows.

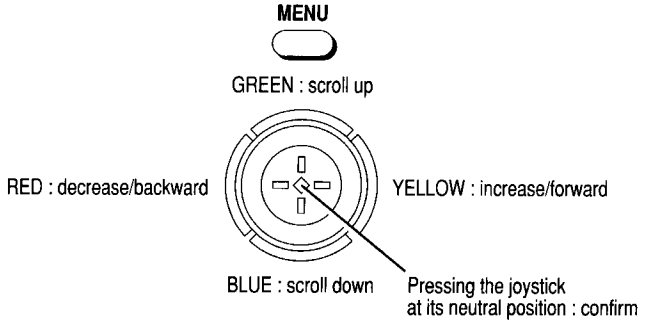

Choosing the Menu Language

This function enables you to change the language of the menu screens.

1 Press power switch ⏻ I on the TV. If the standby indicator ⏻ H on the TV is lit, press ▢ ⑥ or a number button ㉓ on the Remote Commander.

2 Press the MENU button ⑮ on the remote commander.

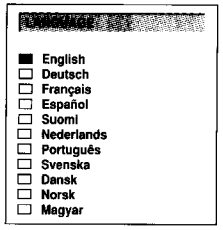

3 Push joystick ⑰ to blue or green to select the language you want then push to yellow.

4 Press the MENU button ⑮ to restore the normal TV picture.

Presetting Channels Automatically

You may have already preset the channels automatically by using the method shown on page 8. You can also preset channels automatically by using the remote commander as follows:

1 Press the MENU button ⓯.

2 Push joystick ⓱ to blue or green to select the symbol on the menu screen then push to yellow.

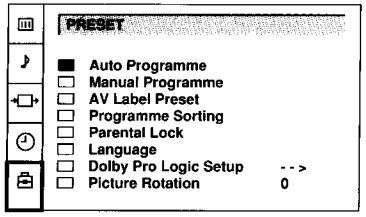

3 Push to blue or green to select 'Auto Programme'.

4 Push to yellow and hold until the automatic menu is displayed and the search starts.
After all available channels have been preset, the normal TV picture is shown.

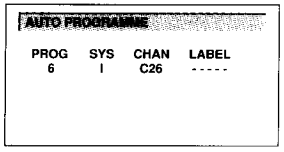

Note: Channels are automatically stored as follows:

Programme 1	BBC1
Programme 2	BBC2
Programme 3	ITV
Programme 4	CH4 or S4C
Programme 5	CH5 (If available in your area)

Presetting Channels Manually

This function enables you to preset channels one by one to different programme numbers. This is also convenient for allocating programme numbers to various video input sources.

1 Press the MENU button ⓯.

2 Push joystick ⓱ to blue or green to select the symbol on the menu screen then push to yellow.

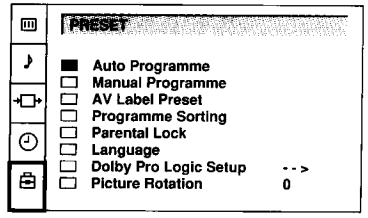

3 Push to blue or green to select 'Manual Programme' then push to yellow .

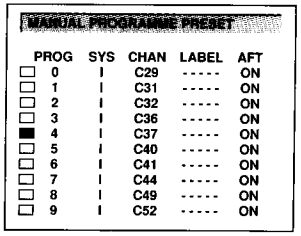

4 Push to blue or green to select on which programme number you want to preset a channel then push to yellow.

5 Push to blue or green to select the TV broadcast system 'I' or a video input source (AV1, AV2,...) then push to yellow twice.

6 Select the first number digit of 'CHAN' (channel) then the second number digit of 'CHAN' with the number buttons ㉓ on the remote commander
or
Push joystick ⓱ to blue or green to search for the next available channel.

7 If you want to store the channel, go to step 8. If not, select a new channel using the number buttons ㉓ on the remote commander or push to blue or green to resume the search.

8 Press the joystick ⓱.

9 Repeat steps 4 to 8 to preset other channels.

10 Press the MENU button ⓯ to restore the normal TV picture.

Adjusting the Picture and Sound

Although the picture and sound are adjusted at the factory, you can adjust them to suit your own taste.

1 Press the MENU button ⓯.

2 Push joystick ⓱ to blue or green to select ▣ for picture control or ♪ for sound control then push to yellow.

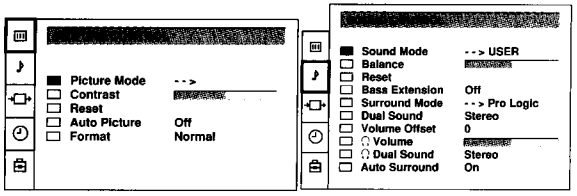

3 Push to blue or green to select the desired item then push to yellow.

4 Push to red or yellow to alter the item then press the joystick ⓱.
For the effect of each control, see the following tables.

5 Repeat steps 3 and 4 to adjust the other items.

6 Press the MENU button ⓯ to restore the normal TV picture.

PICTURE CONTROL	Effect
Picture Mode	• User —> Game —> Movie —> Sports —> Live In 'User' mode, you can preset Brightness, Colour, Sharpness and Hue (NTSC signals only) as follows: **1** Push joystick ⓱ to blue or green to select the desired item then push to yellow. **2** Push to red or yellow to adjust then press the joystick ⓱. **3** Push to red to return to the PICTURE CONTROL menu.
Contrast	• Darker —— I —— Brighter
Reset	• Resets picture to the factory preset levels.
Auto Picture	• All the picture levels automatically change according to the surrounding lighting level. (Auto Picture Control)
Format	• Wide screen effect (16:9)

Adjusting the Picture and Sound (continued)

SOUND CONTROL	Effect
Sound Mode	•User —> Rock —> Jazz —> Pop In 'User' mode, you can preset Treble and Bass as follows. **1** Push joystick ⓱ to blue or green to select the item then push to yellow. **2** Push to red or yellow to adjust then press the joystick ⓱. **3** Push to red to return to the 'SOUND CONTROL' menu.
Balance	•Left —— I —— Right
Reset	•Resets sound to the factory preset levels.
Bass Extension	•On : Enhances the bass performance.
Surround Mode	•Choice among special sound effects. Pro Logic —> Pseudo Stereo —> Spatial —> Club —> Theatre—> Hall —> Church —> Stadium —> Off
Dual Sound	•A: Left channel —> B: Right channel —> stereo —> mono
Volume Offset	•Presets the volume level for individual programmes. -12 —— 0 —— +12
∩ Volume	•Adjusts the headphone volume.
∩ Dual Sound	•Selects the headphone channels. A: Left channel —> B: Right channel —> stereo —> mono
Auto Surround	•Automatically selects Dolby Surround encoded programmes when transmitted (set to "Off" if signal is weak).

Changing Modes Quickly

You can quickly change the Surround Mode or the Picture Mode without entering the 'SOUND CONTROL' or the 'PICTURE CONTROL' menu.

1 Press ■ ㉕ for the picture or ♪ ⓮ for the sound.

2 Push joystick ⓱ to blue or green to select the desired mode.

3 Press ■ ㉕ or ♪ ⓮ again to restore the normal TV screen.

Manual Fine-Tuning

Normally, the automatic fine-tuning (AFT) function is operating.
If the picture is distorted however, you can manually fine-tune the TV to obtain a better picture reception.

1 Press the MENU button ⓯.

2 Push joystick ⓱ to blue or green to select the symbol 🧰 on the menu screen then push to yellow.

3 Push to blue or green to select 'Manual Programme' then push to yellow.

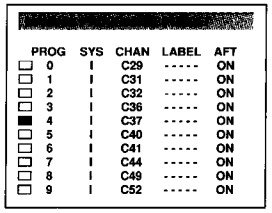

4 Push to blue or green to select the programme number which corresponds to the channel you want to manually fine-tune.

5 Push to yellow repeatedly until the AFT position changes colour.

6 Push to blue or green to fine tune the channel frequency (-15 to +15).

7 Press the joystick ⓱.

8 Repeat steps 4 to 7 to fine-tune other channels.

9 Press the MENU button ⓯ to restore the normal TV picture.

Sorting Programme Positions

This function enables you to exchange the programme positions.

1 Press the MENU button ⓯.

2 Push joystick ⓱ to blue or green to select the symbol 🧰 on the menu screen then push to yellow.

3 Push to blue or green to select 'Programme Sorting' then push to yellow .

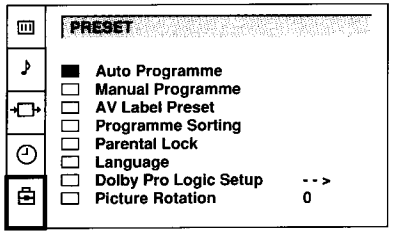

4 Push to blue or green to select the channel you want to exchange then push to yellow.

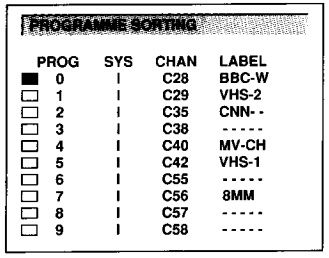

5 Push to blue or green to select the programme position of the channel you want exchanged then push to yellow.

6 Repeat steps 4 to 5 if you wish to exchange other programme positions.

7 Press the MENU button ⓯ to restore the normal TV picture.

Using Parental Lock

This function enables you to prevent undesirable broadcasts from appearing on the screen. We suggest you use this function to prevent children from watching programmes which you consider unsuitable.

1 Press the MENU button ⓯.

2 Push joystick ⓱ to blue or green to select the symbol 🧰 on the menu screen then push to yellow.

3 Push to blue or green to select 'Parental Lock' then push to yellow.

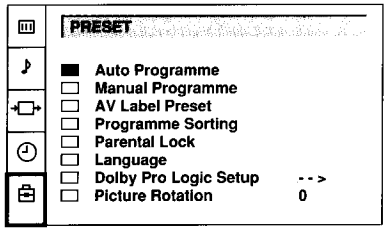

4 Push to blue or green to select the channel you want to block then push to yellow.
A symbol appears before the programme number to indicate that this channel is now blocked.

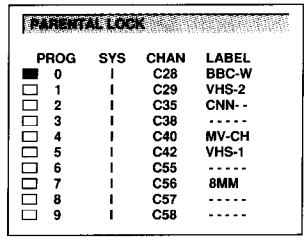

5 Repeat step 4 if you wish to block other channels.

6 Press the MENU button ⓯ to restore the normal TV picture.

Note: To unblock, push to yellow after selecting the channel to unblock in the 'Parental Lock' menu.

Using the Sleep Timer

This function enables you to select a time period after which the TV automatically switches into standby mode.

1 Press the MENU button ⓯.

2 Push joystick ⓱ to blue or green to select the symbol ◴ on the menu screen then push to yellow.

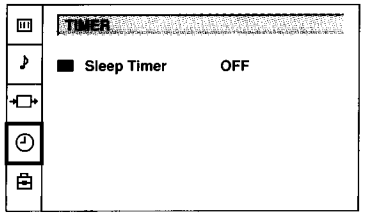

3 Push to yellow.

4 Push to red or yellow to set time delay and press the joystick ⓱.

OFF 0:30 1:00 1:30 ..... 3:30 4:00

One minute before the TV switches into standby mode, a message is displayed on the screen.

5 Press the MENU button ⓯ to restore the normal TV picture.

Adjusting the Picture Rotation

(KV-29F3U only)

If, due to the earth's magnetism, the picture slants, you can use the function 'Picture Rotation' to readjust the picture.

1 Press the MENU button ⓯.

2 Push joystick ⓱ to blue or green to select the symbol ⊡ on the menu screen then push to yellow.

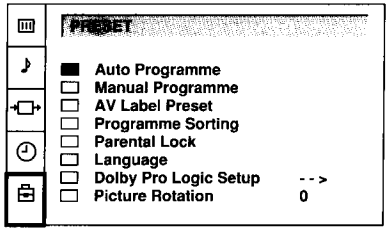

3 Push to blue or green to select 'Picture Rotation' then push to yellow.

4 Push to red or yellow to adjust the picture rotation then press the joystick ⓱. The adjusting range is -5 to +5.

5 Press the MENU button ⓯ to restore the normal TV picture.

Skipping Programme Positions

This function enables you to skip unused programme positions when selecting them with the PROGR+/- buttons. However, you can still watch the channel of the skipped programme position by using the number buttons.

1 Press the MENU button ⓯.

2 Push joystick ⓱ to blue or green to select the symbol on the menu screen then push to yellow.

3 Push to blue or green to select 'Manual Programme' then push to yellow.

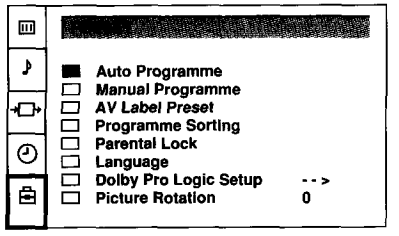

4 Push to blue or green to select the programme position you want to skip then push to yellow.

5 Push to blue or green until '- - -' appears in the 'SYS' position.

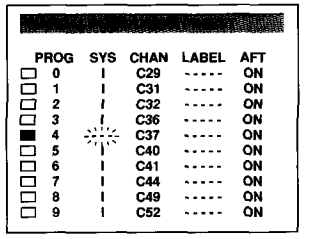

6 Press the joystick ⓱.

7 Repeat steps 4 to 6 to skip other programme positions.

8 Press the MENU button ⓯ to restore the normal TV picture.

Captioning a Station Name

Names for channels are usually automatically taken from teletext if available. You can however name a channel or an input video source using up to five characters (letters or numbers).

1 Press the MENU button ⓯.

2 Push joystick ⓱ to blue or green to select the symbol on the menu screen then push to yellow.

3 Push to blue or green to select 'Manual Programme' then push to yellow.

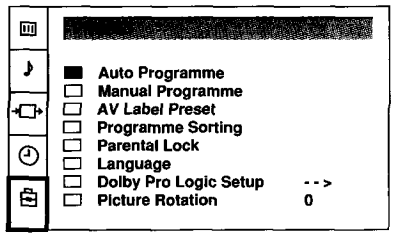

4 Push to blue or green to select the channel you wish to caption then push to yellow repeatedly until the first element of the 'LABEL' position is highlighted.

5 Push to blue or green to select a letter or number and push to yellow (select '-' for a blank). Select the other four characters in the same way.

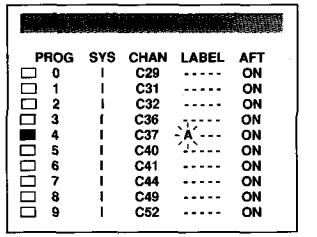

6 After selecting all the characters, press the joystick ⓱.

7 Repeat steps 4 to 6 to caption names for other channels.

8 Press the MENU button ⓯ to restore the normal TV screen.

Setting Up Dolby Pro Logic

Before viewing Dolby Surround encoded programmes, you have to set up the levels or modes of the speakers.
Normally this is required only when you install the TV and the speakers or change their positions.

1 Press the MENU button ⓯.

2 Push joystick ⓱ to blue or green to select the symbol 🧰 on the menu screen then push to yellow.

3 Push to blue or green to select 'Dolby Pro Logic Setup' then push to yellow.

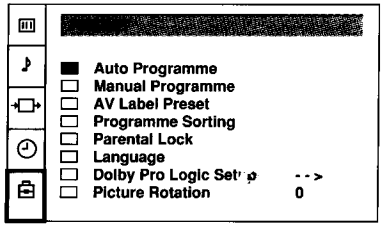

4 Push to blue or green to select 'Mode' then push to yellow.

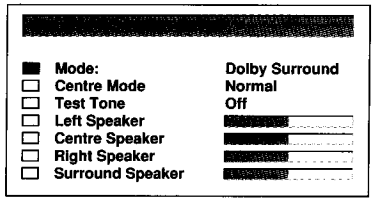

5 Push to red or yellow to select the mode then press the joystick ⓱.
Dolby Pro Logic: if you want to use all the five speakers
Dolby 3 Stereo: if you do not want to use the surround speakers

6 Push to blue or green to select 'Centre Mode' then push to yellow.

7 Push to red or yellow to select the desired mode then press the joystick ⓱.
Normal: if you want to activate all the speakers
Phantom: if you do not want to use the centre speaker

8 Push to blue or green to select 'Test Tone' then push to yellow.

9 Push to red or yellow to select 'On' then press the joystick ⓱.
The test tone cycles through all the speakers.

10 Push to blue to select 'Left Speaker' then push to yellow.
The test tone stays at the selected speaker only.

11 Push to red or yellow to adjust the sound level then press the joystick ⓱.

12 Push to blue or green to select another speaker then push to yellow.

13 Repeat steps 11 to 12 to adjust the sound levels of all the other speakers.

14 Press the MENU button ⓯ to restore the normal TV screen.

Presetting Dolby Pro Logic

With Dolby Pro Logic Surround mode selected, you can experience three dimensional sound when watching Dolby Surround encoded programmes.
To experience programmes encoded in Dolby Surround sound, preset the surround mode to 'Pro Logic' as shown below.

1 Press ♪ ⓮ on the remote commander.

2 Push joystick ⓱ to blue or green to select 'Pro Logic'.

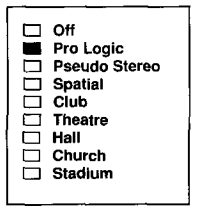

3 Press ♪ ⓮ to restore the normal TV screen.

Or alternatively you can select 'Pro Logic' in the surround mode of the 'SOUND CONTROL' menu (see page 16)

Teletext

Most TV channels broadcast information via teletext. The index page of the broadcaster (usually page 100) gives you information on how to use the service.
Make sure you use a TV channel with a strong signal, otherwise teletext errors may occur.

Switching Teletext on and off

1 Select the channel which carries the teletext service you wish to view.

2 Press ▤ ❺ to display teletext.
If no teletext signal is broadcast, the indication P100 is displayed on a black screen.

3 Input three digits for the page number using the number buttons ㉓.
The page counter searches for the page and after some seconds the page is displayed.

4 Press ▢ ❻ to return to the normal TV picture.

Using Other Teletext Functions

To	Press
Access the next or preceding teletext page	▤▲ ㉖ for the next page or ▤▼ ㉖ for the preceding page
Mix the mode	▤ ❺ when in teletext mode. Now the teletext page is superimposed on the TV programme. Press again to return to the normal teletext display.
Freeze a teletext subpage	⊕ ⓴. Press once again to cancel.
Reveal hidden information (e.g.: answers to a quiz)	? ⓳. Press once again to cancel.

Favourite page system

You can store up to four of your favourite teletext pages per Teletext service. In this way you have quick access to the pages you frequently use.

Storing pages

1 Use the number buttons ㉓ to select the page you would like to store.

2 Press ◈ ㉑ twice.
The colour prompts at the bottom of the screen flash.

3 Push the joystick ⑰ to the desired colour to store the selected page.
The page is now stored on this colour.

Repeat steps 1 to 3 for the other 3 pages.

Displaying the Favourite Pages

1 Press ◈ ㉑.

2 Push the joystick ⑰ to the colour on which the desired page is stored.

Make sure you press ◈ ㉑ , otherwise the normal Fastext facility operates.

Using Fastext

(only available, if the TV station broadcasts Fastext signals)

With Fastext you can access pages with one key stroke . When Fastext is broadcast, a colour-coded menu appears at the bottom of the screen. The colours of this menu correspond to the red, green, yellow and blue marks ⑰ on the Remote Commander.

Push the joystick ⑰ to the colour mark which corresponds to the colour-coded menu. The page is displayed after some seconds.

Connecting Optional Equipment

There is a wide range of optional equipment you can connect to your TV. Refer to the illustrations on the front flap page of this manual.

Symbol	Acceptable input signals	Available output signals
1 L	Normal audio/video and RGB	Audio/video from TV tuner
2/S 2 M	Normal audio/video and S video	Audio/video from selected source
3, 3 B S 3 C	Normal audio/video and S video	No output
K	No inputs	Audio from selected source.

Connecting Headphones

Plug in the headphones to the socket ∩ A on the front of the TV.

About S video input

Video signals may be separated into Y (luminance) and C (chrominance) signals. Separating the two signals prevents interference and thus improves the picture quality.

Notes on connections:

- If the picture or sound is distorted, move the VCR away from the TV.
- When connecting a monaural VCR, connect only the white jack to both the TV and VCR.
- Select 'TV' for output in the 'VIDEO CONNECTION' menu if you connect a decoder to 2/S 2 M (see page 30).

Selecting Input and Output Signals

This section explains how to select the output signal from ⇨ 2/⇨S 2 M and how to select and view the input. You can use direct access buttons →⃝ ⓴ E to select the input or the menu system to select input and output.

Selecting Input Signals With Direct Access Buttons

Press →⃝ ⓴ E repeatedly .
Press ▢ ❻ to restore the normal TV picture.

Symbol on the screen	Input Signal
→⃝ 1	Audio/video through Euro AV connector L
→	RGB through Euro AV connector L
→⃝ 2	Audio/video through Euro AV connector M
→S 2	S video through Euro AV connector M
→⃝ 3	Audio/video through the phono jacks C
→S 3	S video through the 4 pin DIN B

Selecting With the Video Connection Menu

1 Press the MENU button ⓯.

2 Push joystick ⓱ to blue or green to select →▢→ for "Video Connection" then push to yellow.

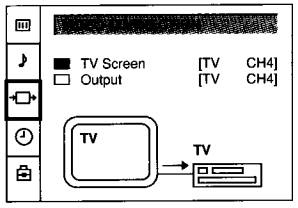

3 Push to blue or green to select 'TV Screen' (input source for the TV Screen) or 'Output' (output source for ⇨ 2/⇨S 2 M) then push to yellow ⓱.

4 Push to red or yellow repeatedly to select the desired input or output source then press the joystick ⓱.

5 Press the MENU button ⓯ to restore the normal TV picture.

Note: If you select 'AUTO' for output, the output source automatically becomes the same as the desired input source.

Using AV Label Preset

This function enables you to label the input sources using up to five characters (letters or numbers).

1 Press the MENU button ⓯.

2 Push joystick ⓱ to blue or green to select the symbol ⊟ on the screen then push to yellow.

3 Push to blue or green to select 'AV Label Preset' then push to yellow.

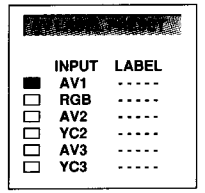

4 Push to blue or green to select the desired input source then push to yellow.

5 Push to blue or green to select a letter or number then push to yellow (select '-' for a blank).
Select the other four characters in the same way.

6 After selecting all the characters, press the joystick ⓱.

7 Repeat steps 4 to 6 to label other input sources.

8 Press the MENU button ⓯ to restore the normal TV screen.

Remote Control of Other Sony Equipment

You can control other Sony remote controlled equipment using the buttons ❷ on the Remote Commander.

1 Set the VTR 1/2/3 MDP selector according to the equipment
VTR 1: Beta VCR
VTR 2: 8mm VCR
VTR 3: VHS VCR
MDP: Video Disk Player

2 Use the buttons ❷ to operate the equipment.

Notes:
- If your video equipment has a COMMAND MODE selector, set this selector to the same position as the VTR 1/2/3 MDP selector on the TV Remote Commander
- If the equipment does not have a certain function, the corresponding button on the Remote Commander does not work.

Troubleshooting

Here are some simple solutions to the problems which affect the picture and sound.

Problem	Solution
No picture (screen is dark), no sound	• Plug the TV in. • Press ⏻ I on the TV. (If ⏻ indicator H is on, press 🖵 ❻ or a programme number ㉓ on the Remote Commander.) • Check the aerial connection. • Check if the selected video source is on. • Turn the TV off for 3 or 4 seconds then turn it on again using ⏻ I.
Poor or no picture (screen is dark), but good sound	• Press MENU ⓯ to enter the 'PICTURE CONTROL' menu and adjust 'Contrast', 'Brightness' and 'Colour'.
Poor picture quality when watching an RGB video source.	• Press ⇨ ⑳ E repeatedly to select ⇨.
Good picture but no sound	• Press 🔊 + ⑯ F. • If 🔇 is displayed on the screen, press 🔇 ❶. • Check the speaker lead connections.
No colour for colour programmes	• Press MENU ⓯ to enter the 'PICTURE CONTROL' menu, select 'Reset' then press the joystick ⓱.
Remote Commander does not function.	• Replace the batteries

If you continue to have problems, have your TV serviced by qualified personnel. Never open the casing yourself.

SECTION 2
DISASSEMBLY

2-1. REAR COVER REMOVAL

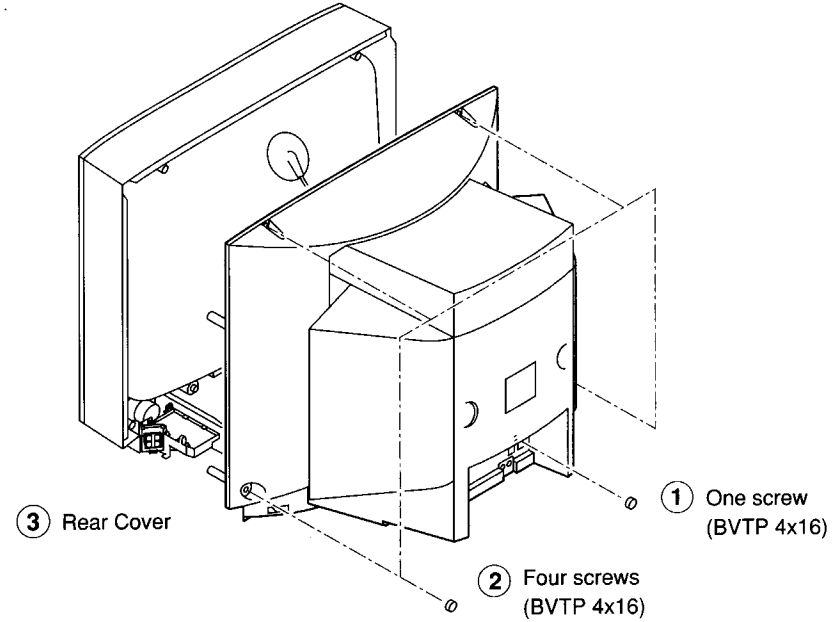

2-2. CHASSIS ASSY REMOVAL

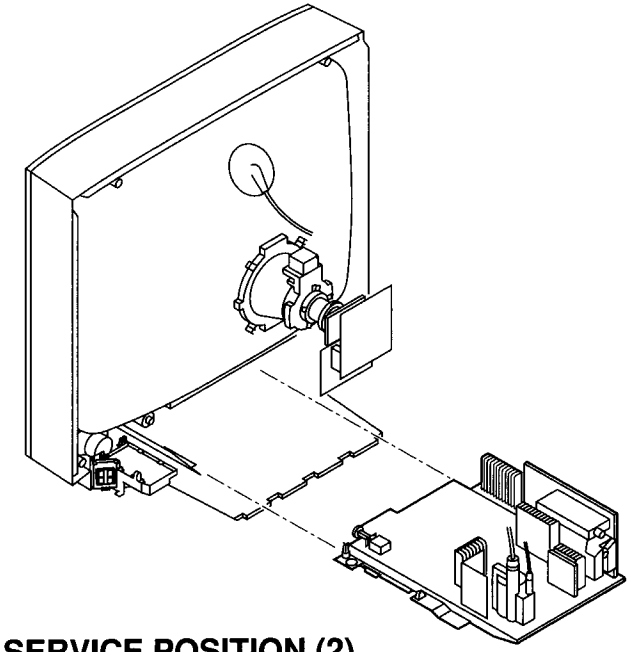

2-3-1. SERVICE POSITION (1)

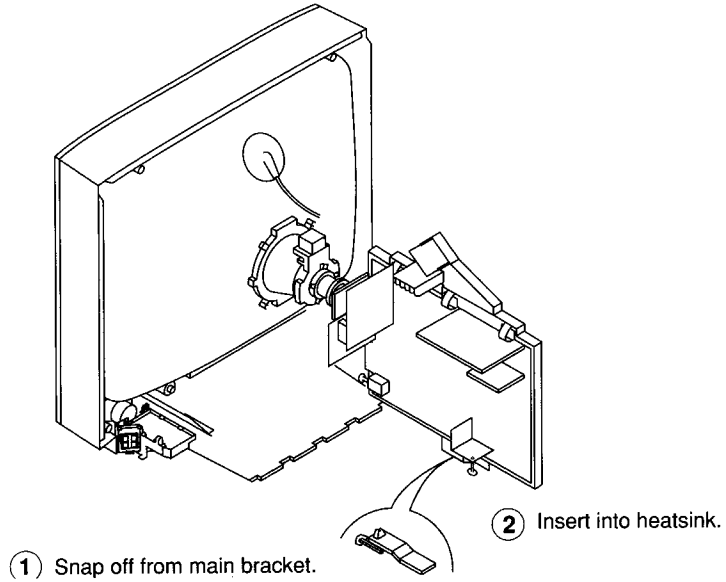

2-3-2. SERVICE POSITION (2)

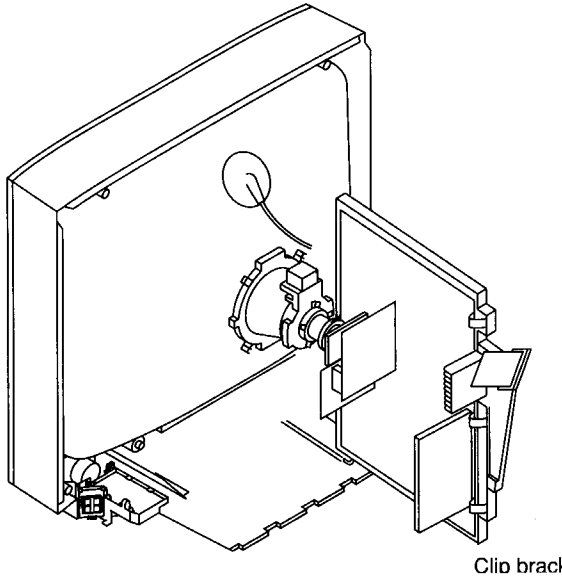

2-4. WIRE DRESSING

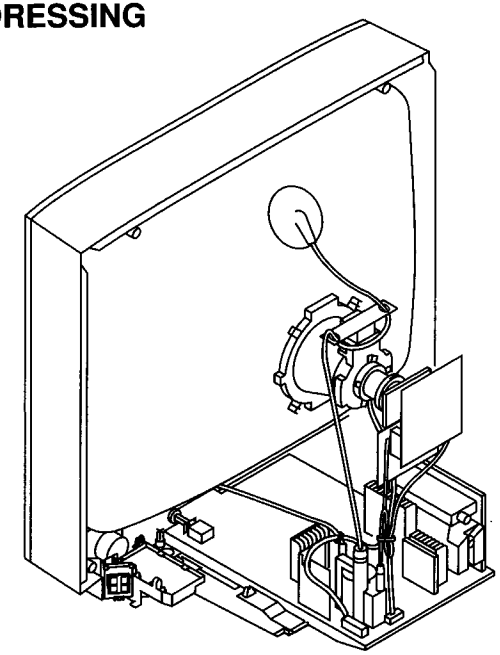

2-5. A BOARD REMOVAL

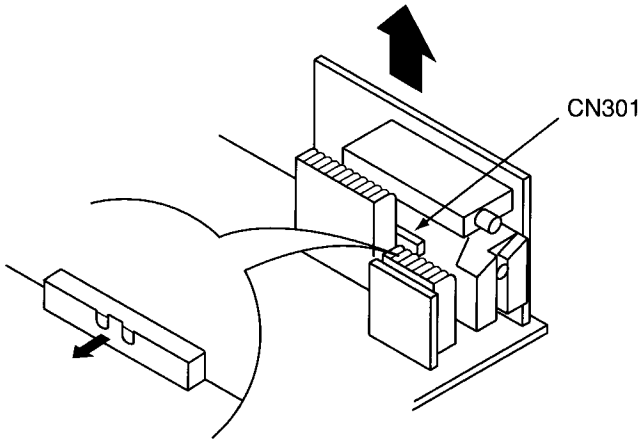

(1) Remove CN301 before removing A board.

2-6. A EXTENSION BOARD

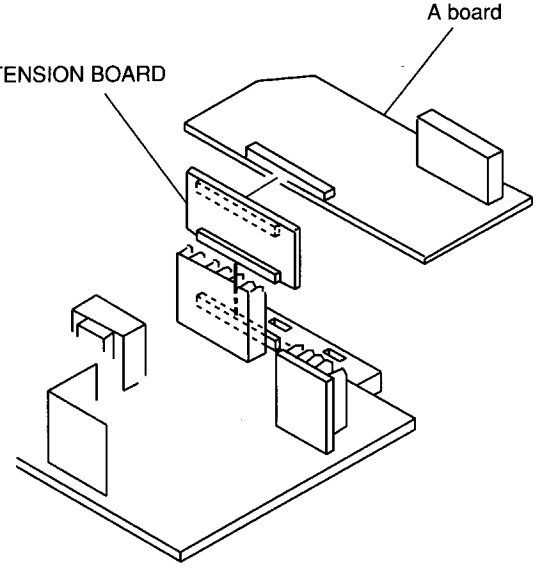

2-7. A1 EXTENSION BOARDS

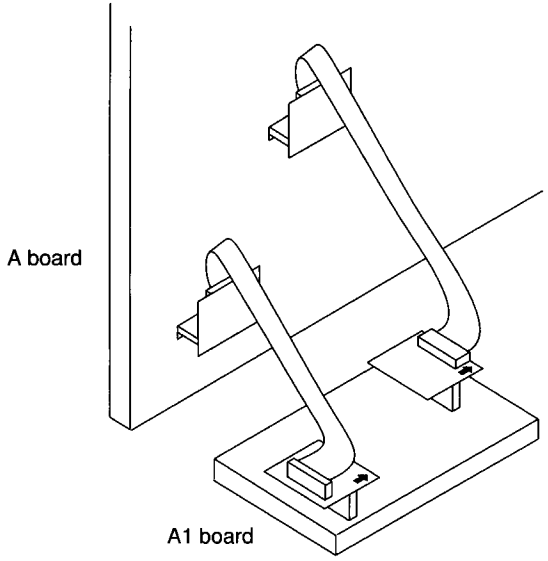

2-8. PICTURE TUBE REMOVAL

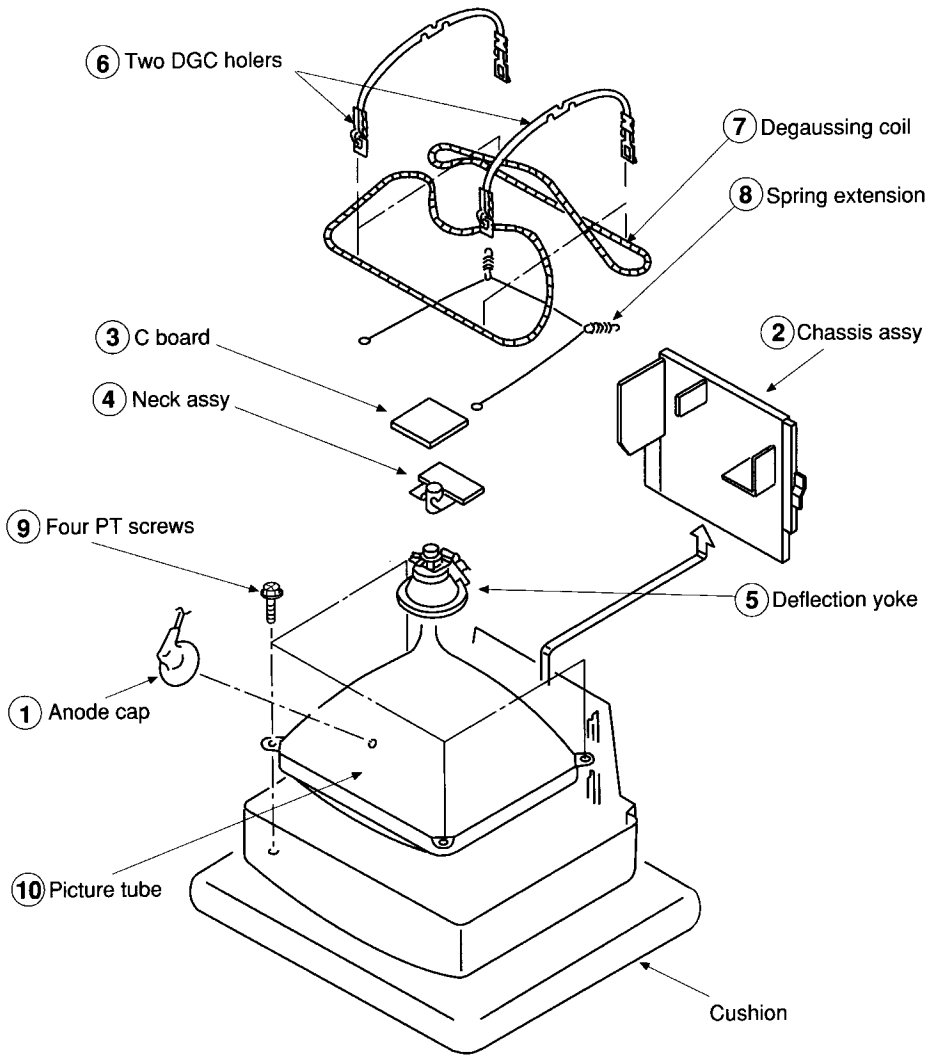

• REMOVAL OF ANODE-CAP

Note: Short circuit the anode of the picture tube and the anode cap to the metal chassis, CRT shield or carbon paint on the CRT, after removing the anode.

* REMOVING PROCEDURES.

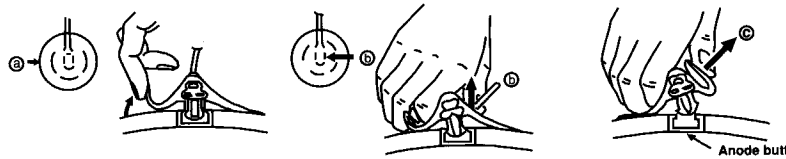

① Turn up one side of the rubber cap in the direction indicated by the arrow ⓐ

② Using a thumb pull up the rubber cap firmly in the direction indicated by the arrow ⓑ

③ When one side of the rubber cap is separated from the anode button, the anode-cap can be removed by turning up the rubber cap and pulling it up in the direction of the arrow ⓒ

• HOW TO HANDLE AN ANODE-CAP

① Don't damage the surface of anode-cap with sharp shaped material !

② Don't press the rubber hardly not to hurt inside of anode-caps !
A metal fitting called as shatter-hook terminal is built into the rubber.

③ Don't turn the foot of rubber over hardly !
The shatter-hook terminal will stick out or damage the rubber.

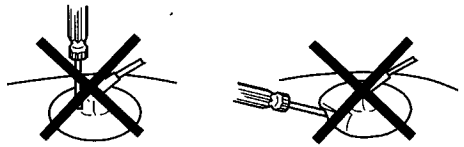

REMOVAL AND REPLACEMENT OF THE MAIN-BRACKET BOTTOM PLATES.

(1) REMOVING THE PLATES

In the event of servicing being required to the solder side of the D Board printed circuit, the bottom plates fitted to the main chassis bracket require to be removed. This is performed by cutting the gates with a sharp wire cutter at the locations shown and indicated by arrows.

Note : There are 5 plates fitted to the main bracket and secured by 4 or 6 gates. Only remove the necessary plate to gain access to the circuit board.

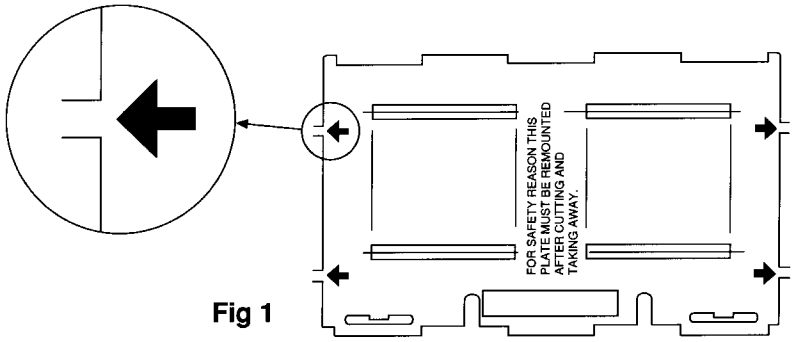

Fig 1

(2) REFITTING THE PLATES

Because the plates differ in size it is important that the correct plates are refitted in their original location.
The plates are identified by markings A-B-C-D-E on their top side.

1. Identify the plate by locating its marking.
2. Turn the plate over noting where the marking is located.
3. Locate the corresponding marking indicated on the main chassis bracket. See Fig 2.
4. Refit the plate as indicated in Fig 3 with the markings located next to each other.

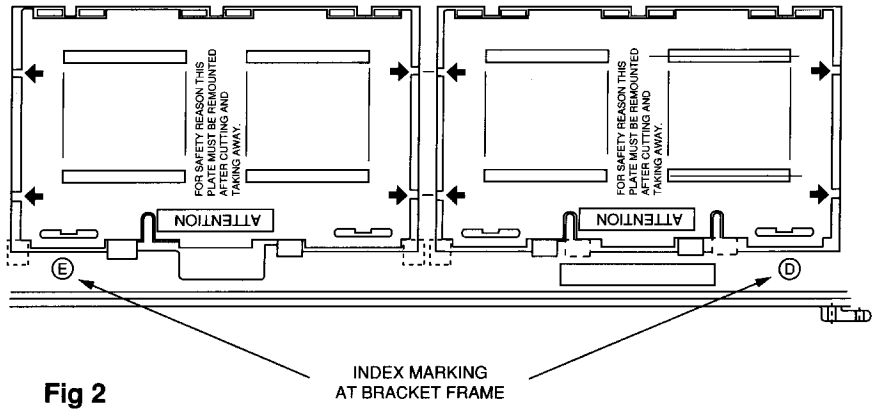

Fig 2

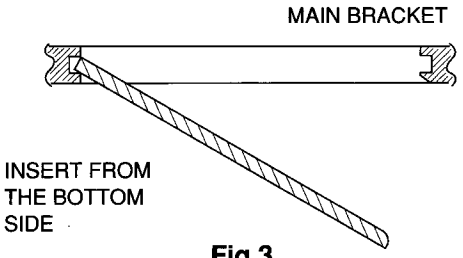

Fig 3

In the event of the plates requiring to be removed at a later stage, this can be achieved by inserting a screwdriver in the snap-recess indicated as in Fig 4 and lifting out.

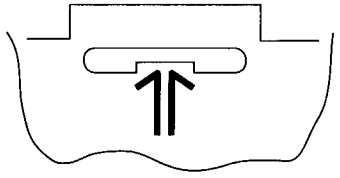

Fig 4

SECTION 3
SET-UP ADJUSTMENTS

- When complete readjustment is necessary or a new picture tube is installed, carry out the following adjustments.
- Unless there are specific instructions to the contrary, carry out these adjustments with the rated power supply.
- Unless there are specific instructions to the contrary, set the controls and switches to these settings :

◑ Contrast ..... 80% (or remote control normal)
☼ Brightness 50%

- Carry out the following adjustments in this order :

1. Beam landing
2. Convergence
3. Focus
4. White balance

Note: Testing equipment required.
1. Color bar/pattern generator
2. Degausser
3. DC power supply
4. Digital multimeter
5. Oscilloscope

Preparation:
- In order to reduce the influence of geomagnetism on the set's picture tube, face it east or west.
- Switch on the set's power and degauss with the degausser.

3-1. BEAM LANDING

1. Input the white signal with the pattern generator.
   CONTRAST } normal
   BRIGHTNESS }
2. Set the pattern generator raster signal to red.
3. Move the deflection yoke forward and adjust with the purity control so that the red is at the centre and the blue and the green take up equally sized areas on each side. (See Fig. 3-1 - 3-3)
4. Move the deflection yoke forward and adjust so that the entire screen becomes red. (See Fig. 3-1)
5. Switch the raster signal to blue, then to green and verify the condition.
6. When the position of the deflection yoke has been decided, fasten the deflection yoke with the screws.
7. If the beam does not land correctly in all the corners, use a magnet to adjust it. (See Fig. 3-4)

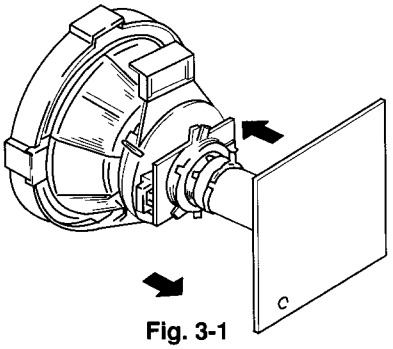

Fig. 3-1

Fig. 3-2

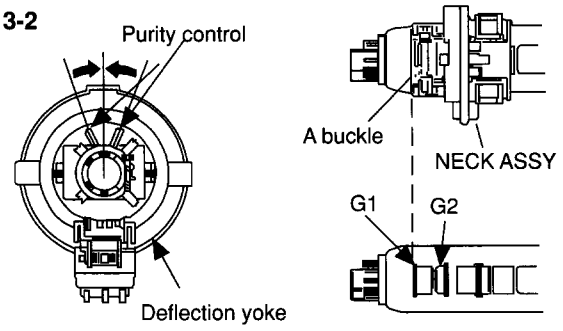

Fig. 3-3

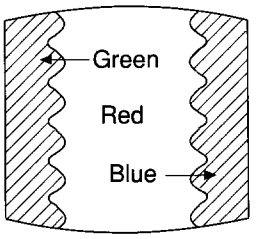

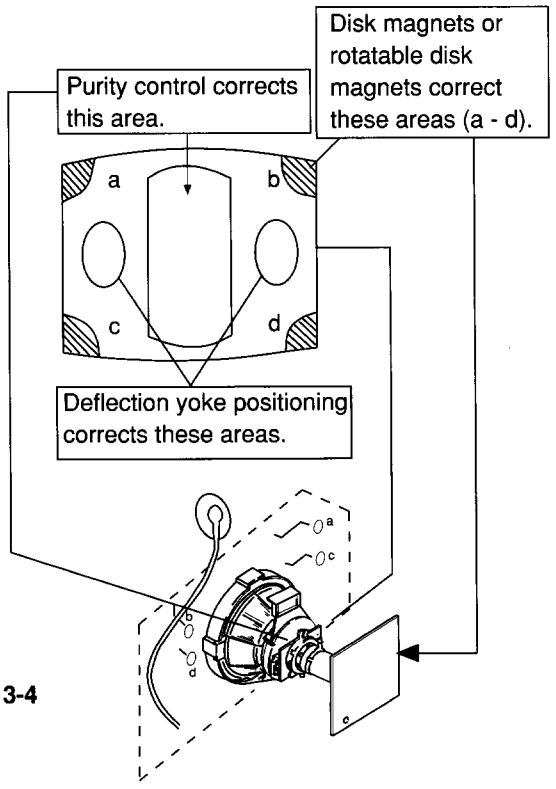

Fig. 3-4

3-2. CONVERGENCE

Preparation:

- Before starting this adjustment, adjust the focus, horizontal size, and vertical size.
- Minimize the brightness setting.
- Provide a dot pattern.

(1) Horizontal and vertical static convergence

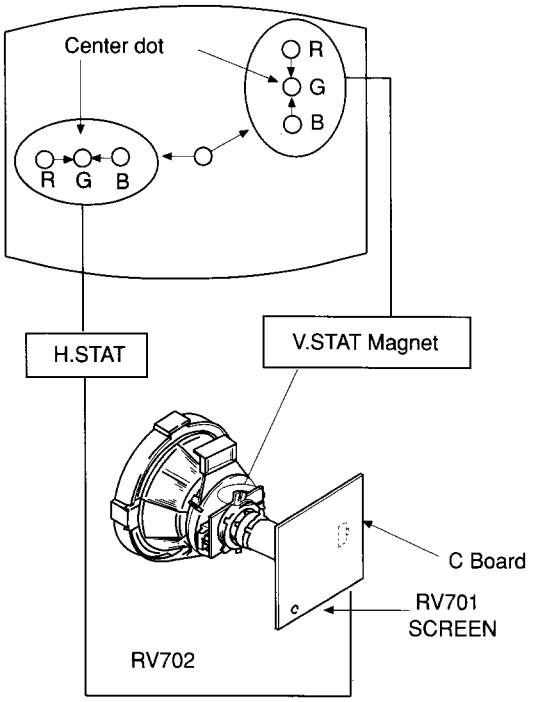

1. (Moving horizontally), adjust the H.STAT control so that the red, green, and blue points are on top of each other at the centre of the screen.
2. (Moving vertically), adjust the V.STAT magnet so that the red, green, and blue points are on top of each other at the centre of the screen.
3. If the H.STAT variable resistor cannot bring the red, green, and blue points together at the centre of the screen, adjust the horizontal convergence with the H.STAT variable resistor and the V.STAT magnet in the manner given below.
   (In this case, the H.STAT variable resistor and the V.STAT magnet influence each other)

- Tilt the V.STAT magnet and adjust the static convergence by opening or closing the V.STAT magnet.

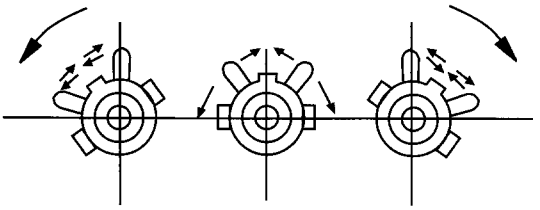

4. If the V.STAT magnet is moved in the direction of the (a) and (b) arrows, the red, green, and blue points move as shown below.

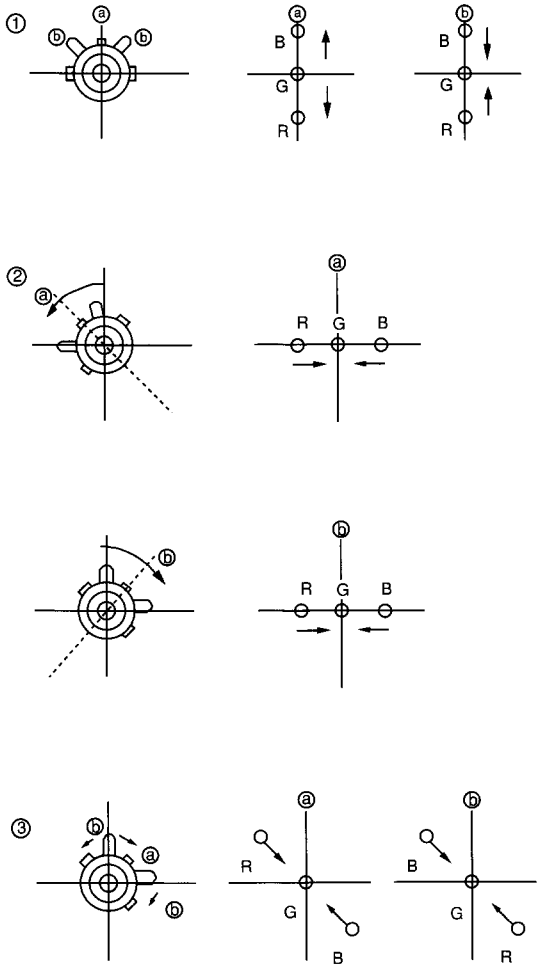

- Operation of BMC (Hexapole) Magnet

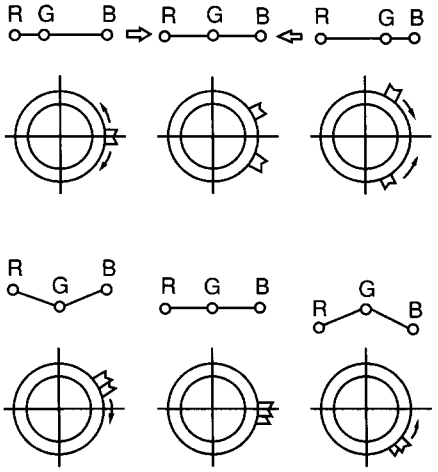

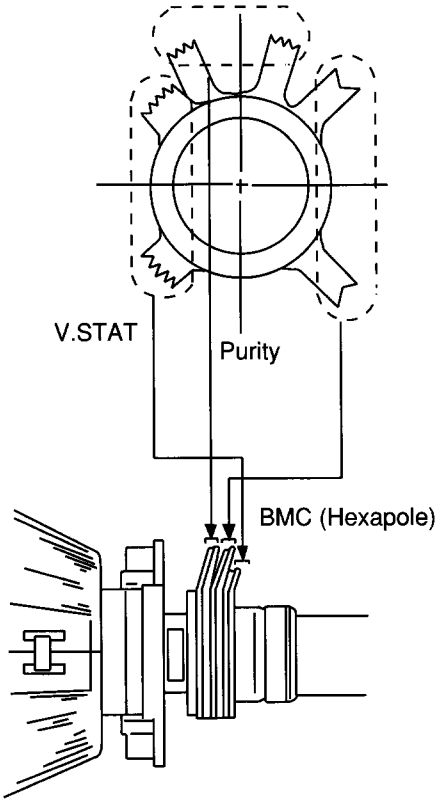

- The respective dot position resulting from moving each magnet interact, so be sure to perform adjustment while tracking.
  Use the H.STAT VR to adjust the red, green, and blue dots so they coincide at the centre of the screen (by moving the dots in the horizontal direction).

(2) Dynamic convergence adjustment.

Preparation:

- Before starting this adjustment, adjust the horizontal static convergence and the vertical static convergence.

1. Slightly loosen the deflection yoke screws.
2. Remove the deflection yoke spacer.
3. Move the deflection yoke as shown in the figure below and optimize the convergence.
4. Tighten the deflection yoke screws.
5. Re-install the deflection yoke spacer.

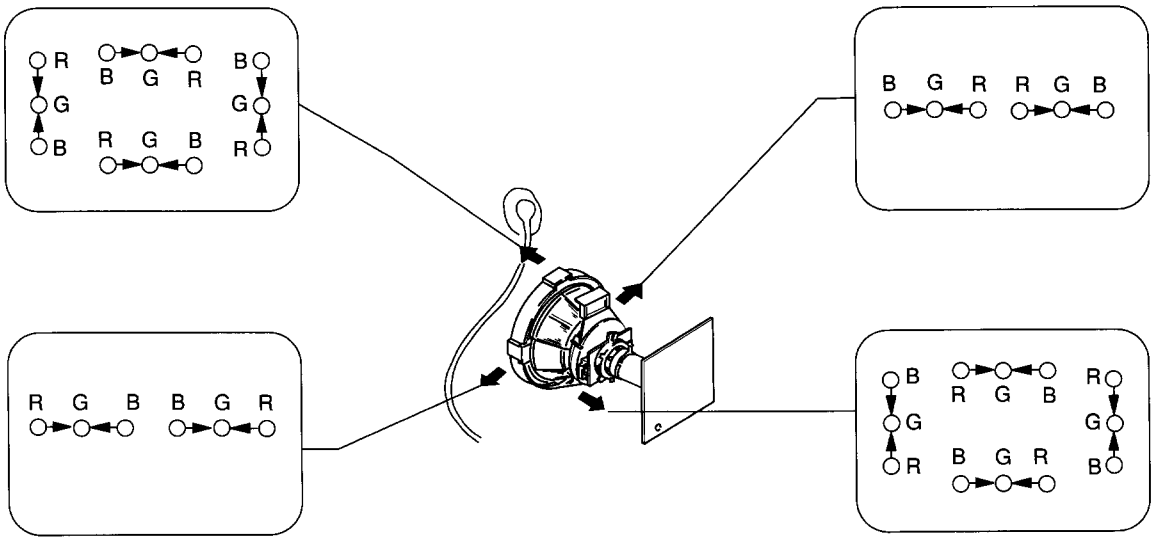

(3) Screen corner convergence.

If you are unable to adjust the corner convergence properly, correct them with the use of permalloy assemblies.

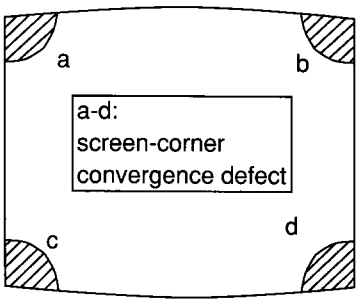

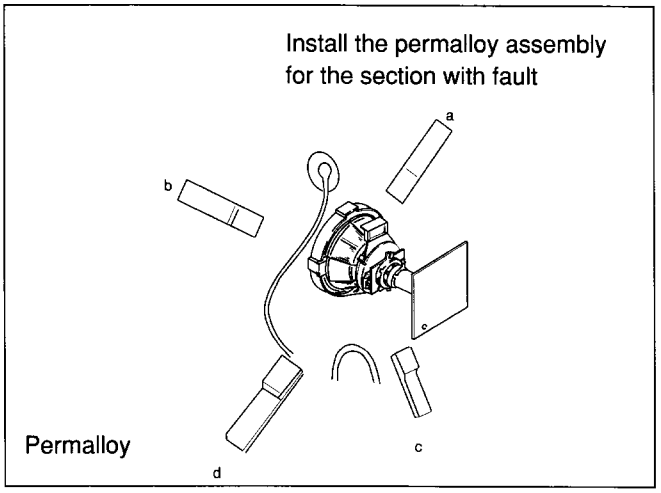

3-3. WHITE BALANCE

G2 Setting

1. Switch the set into AV mode (apply no signal to the AV connectors).
2. Connect a Volt Meter to Test Point 1 on the A board.
3. Adjust RV01 to obtain a voltage of 3.0V ±0.3V.

White balance adjustment

1. Input an all white signal from the pattern generator.
2. Enter into the service mode.
3. Enter into Picture Adjustment service menu.
4. Select sub-contrast and adjust to 7.
5. Select the Green Drive and adjust so that the white balance becomes optimum.
6. Select the Blue Drive and adjust so that the white balance becomes optimum.
7. Press the TV button to return to TV operation.

PICTURE ADJUSTMENT

AFC mode	1
REF position	2
SCP BGR	1
SCP BGF	1
Trap Fo	0
Sub contrast	Adj
Sub colour	Adj
Sub brightness	Adj
Sub hue	Adj
Green drive	Adj
Blue drive	Adj
Green cutoff	Adj
Blue cutoff	Adj
Gamma	0
Pre / overshoot	0
Y delay	3

SECTION 4
CIRCUIT ADJUSTMENTS

4-1. ELECTRICAL ADJUSTMENTS

Service adjustment to this model can be performed with the supplied remote commander RM-862.

HOW TO ENTER INTO SERVICE MODE

1. Turn on the main power switch of the set and enter into standby mode.
2. Press the following sequence of buttons on the Remote Commander.

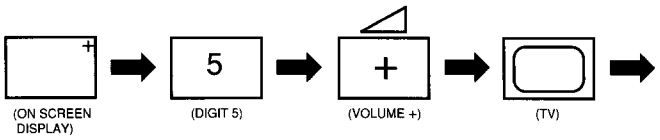

"TT-- " will appear in the top right corner of the screen. Other status information will also be displayed.

3. Press MENU on the commander to obtain the following menu on the screen.

TEST MENU

> Picture adjustment
Geometry
Wide
MSP
IC status
Current TV status

4. Move to the corresponding adjustment using the ◇ button on the commander.
5. Move the button to the right ◇ to enter the selected adjustment.
6. Turn off the power to quit the service mode when adjustments are completed.

PICTURE ADJUSTMENT

AFC mode	1
REF position	2
SCP BGR	1
SCP BGF	1
Trap Fo	0
Sub contrast	Adj
Sub colour	Adj
Sub brightness	Adj
Sub hue	Adj
Green drive	Adj
Blue drive	Adj
Green cutoff	Adj
Blue cutoff	Adj
Gamma	0
Pre / overshoot	0
Y delay	3

GEOMETRY ADJUSTMENT

V Size	Adj
V Position	Adj
S Correction	Adj
V Linearity	Adj
H Size	Adj
H Position	Adj
Pin Amp	Adj
Pin Phase	Adj
AFC Bow	Adj
AFC Angle	Adj
EHT V	Adj
EHT H	Adj
Corner Pin	Adj

WIDE

V Aspect	47
V Scroll	31
Upper V Lin	0
Lower V Lin	0
Left Blanking	1
Right Blanking	11

MSP	
AGC ON/OFF	ON
Constant gain CDB	0
FM prescale FMP	36
Zwei mono-st WHI	36
Zwei st-mono WLO	18
Zwei mono-bi WMH	36
Zwei bi-mono WLO	18
Time zwei WML	41
Fawct limit	10
Fawct soll init FAW	12
Fawer tol	2
Nicam Err Max CCT	10
Nicam Err Min	0
Nicam Prescale NIP	97
Time Nicam	31
Carrier mute CRM	OFF
Audio clock ACO	HIZ
Scart prescale	25
Scart volume	64

IC STATUS (CXA2000 / CXA2040)	
CXA2000	
H lock	1
IKR	1
VNG	0
X-RAY	0
Colour system	3
CV1 Sync	1
CXA2040	
Sync sep	1
S1 mode pin	01
S2 mode pin	01
TUNER	
Tuner status	01101011

TV STATUS	
Text system	C TEXT/TV TEXT
Dolby	NO/YES
Text language set	WEST/EAST/RUSSIAN
Menu language set	WEST/EAST/RUSSIAN
Destination	B/D/U/K/L/E/A/R
Scart 16:9	OFF/ON
RGB priority	OFF/ON
Ageing	OFF/ON
Size	29/25
Colour trap sw	SECAM/ALL
Velocity mod	ON/OFF
AFT STATUS	WINDOW/HIGH/LOW

SUB BRIGHTNESS ADJUSTMENT

1. Input a Phillips pattern.
2. Set the picture control to minimum.
3. Enter into the Picture Adjustment Service Menu.
4. Adjust the Sub-Brightness data so that there is barely a difference between the 0 IRE and 10 IRE signal.

SUB CONTRAST ADJUSTMENT

1. Input a video that contains a small 100% area on a black background.
2. Set the picture control to maximum.
3. Connect an oscilloscope to pin 3 of CN301 (A board).
4. Enter into the Picture Adjustment Service Menu.
5. Adjust the Sub-contrast data to obtain a black to white amplitude of 2.50 volts.

SUB COLOUR ADJUSTMENT

1. Receive a PAL Colour Bar video signal.
2. Connect an oscilloscope to pin 3 of CN301 (A board).
3. Enter into the Picture Adjustment Service Menu.
4. Adjust the sub colour data so that cyan, magenta and blue colour bars are of equal height.

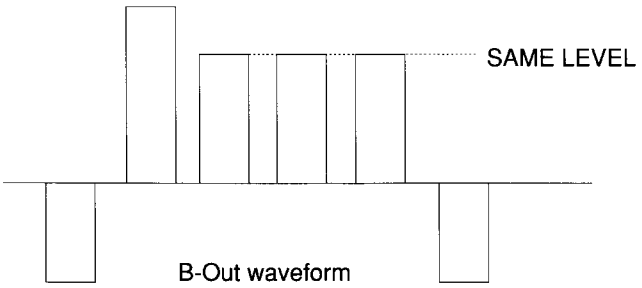

NOTE: The data shown in the TV STATUS table is dependant on destination, screen size and country.

SYSTEM B/G, D/K, I & L I.F ADJUSTMENT

1. Input an off air signal of between 60-100dBuV / 75 ohm terminated, via the tuner socket.
2. Enter into the I.F adjustment service mode (i.e. " TT 59 ") to fix the I.F frequency to 38.9 MHz.
3. Enter into the service mode and select "Current TVStatus".
4. Adjust the I.F coil (LV01) until the "AFT Status" indicates a " Window " condition.

SYSTEM L BAND 1 I.F ADJUSTMENT

1. Input an off air signal of between 60-100dBuV / 75 ohm terminated, via the tuner socket.
2. Enter into the I.F adjustment service mode (i.e. " TT 59 ") to fix the I.F frequency to 34.2 MHz.
3. Enter into the service mode and select "Current TVStatus".
4. Adjust the RV02 until the "AFT Status" indicates a " Window " condition.

TUNER AGC ADJUSTMENT

1. Receive a signal of 63dBuV / 75 ohm terminated via the tuner socket.
2. Measure the voltage at test point 1 (A board).
3. Adjust RV01 to obtain a voltage of 3.0V ± 0.3V.

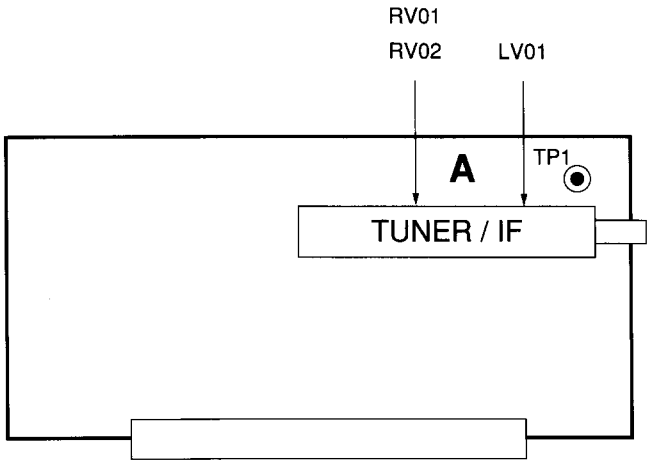

- A Board component side -

DEFLECTION SYSTEM ADJUSTMENT

1. Enter into the Geometry Adjustment Service Menu.
2. Select and adjust each item in order to obtain the optimum image.

GEOMETRY ADJUSTMENT

V Size	Adj
V Position	Adj
S Correction	Adj
V Linearity	Adj
H Size	Adj
H Position	Adj
Pin Amp	Adj
Pin Phase	Adj
AFC Bow	Adj
AFC Angle	Adj
EHT V	Adj
EHT H	Adj
Corner Pin	Adj

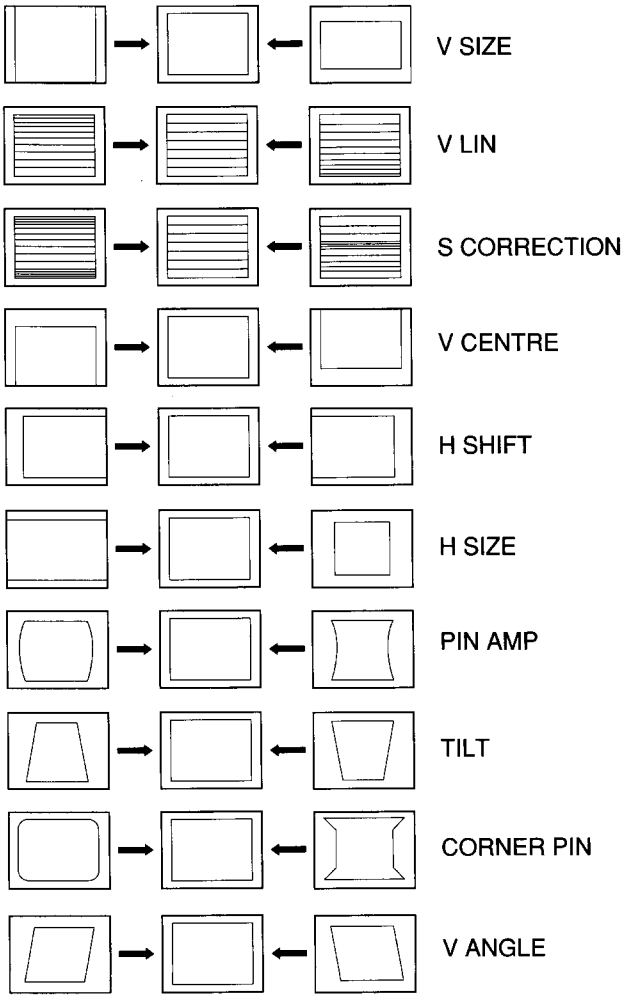

4-2. TEST MODE 2:

Is available by pressing Test button twice, OSD " TT " appears. The functions described below are available by pressing the two numbers. To release the Test mode 2, press 0 twice, or switch the TV into stand-by mode.

Note:
TT modes 40-49 require the TV to be in programme 59 before the command is accepted.

00	Cancel Test mode
01	Picture maximum
02	Picture minimum
03	Volume 30%
04	Volume 50%
05	Volume 65%
06	Volume 80%
07	Ageing mode
08	Set shipping conditions
09	Reset language select menu on power up
10	No function
11	Clear & Disable OSD
12	Enable OSD
13	Scart 16:9 Enable/Disable
14	Display TV status
15	Picture reset
16	No function
17	Set all AV labels to default
18	RGB Priority Enable/Disable
19	Set all programme labels to default
20	No function
21	Sub Picture Adjustment (use red/yellow)
22	Sub Colour Adjustment (use red/yellow)
23	Sub Brightness Adjustment (use red/yellow)
24	Destination U
25	Destination D
26	Destination B
27	Destination K
28	Destination L
29	Destination E
30	No function
31	Destination A
32	Destination R

33	Sub Woofer Enable
34	Sub Woofer Disable
35	Set up trap switch
36	Rotation test
37	25" set
38	25" reset
39	No function
40	No function
41	Re-initialise the NVM
42	Default Programme info in NVM with Pencoed factory channel setup
43	Default Geometry settings
44	Default favourite pages to 100,101,102 & 103
45	Switch off all Channel Locks
46	Dealer commander mode (pending)
47	Default MSP settings
48	Restore NVM test byte Undo TT49
49	Delete NVM test byte Sets virgin NVM
50	No function
51	Text interlace odd (NON INTERLACE MODE = 3)
52	Text interlace even (NON INTERLACE MODE = 2)
53	Auto picture ON
54	Auto picture OFF
55	Auto cut off ENABLE
56	Auto cut off DISABLE
57	AV3 ENABLE
58	AV3 DISABLE (if TV Text) otherwise AV3 ENABLE
59	Auto IF Display
60	No function
61	Dolby Pro-logic ON
62	Noise Left
63	Noise Right
64	Noise Centre
65	Noise Surround

66	DSP Bypass
67	No function
68	Diagnostics OFF
69	Diagnostics ON
70	No function
71	Lumisponder Curve 1
72	Lumisponder Curve 2
73	No function
74	Text H Position adjust
75	Picture reset
76	MSP BG filter enabled (h/w required)
77	Sound reset
78	MSP BG filter disabled (h/w required)
79	Wide set-up (Wide screen models only)
80	No function
81	Velocity Mod ON
82	Velocity Mod OFF
83	Picture Rise step 40ms
84	Picture Rise step 80ms
85	Picture Rise step 160ms
86	Picture Rise OFF
87	Select Shop mode
88	Compact Text Acquisition Disable
89	Compact Text Acquisition Enable
90	No function
91	Sound Centre mode NORMAL
92	Sound Centre mode WIDE
93	Sound Centre mode PHANTOM
94	Toggle Compact Text Acquisition Delay Bit 0
95	Toggle Compact Text Acquisition Delay Bit 1
96	Toggle Compact Text Acquisition Delay Bit 2
97	Toggle Compact Text Acquisition Delay Bit 3
98	Toggle Compact Text Acquisition Delay Bit 4
99	Set test menu

These test modes can set the delay byte to any value 0-31 which creates a (value x 20) mS delay.

4-3. BE-3D SELF DIAGNOSTIC SOFTWARE

The identification of errors within the BE-3D chassis is triggered in 1 of 2 ways :- 1: Bus busy or 2: Device failure to respond to IIC. In the event of one of these situations arising the software will first try to release the bus if busy (Failure to do so will report with continuous flashing LED) and then communicate with each device in turn to establish if a device is faulty. If a device is found to be faulty the relevant device number will be displayed through the led (Series of flashes which must be counted) See Table 1, non fatal errors are reported with this method.

Table 1

ERROR	LED ERROR COUNT
No error	00
Not allowed (may be confused with Sircs response flash!)	01
Protection circuit trip < ANY TIME >	02
IIC SCL LOW < POWER UP ONLY >	03
IIC SCA LOW < POWER UP ONLY >	04
IIC SDA & SCL LOW < POWER UP ONLY >	05
Jungle/Chroma controller no acknowledge < POWER UP ONLY >	06
Video Switch no acknowledge < POWER UP ONLY >	07
Tuner no acknowledge	08
MSP no acknowledge	09
NVM no acknowledge	10
M3L TXD Low < POWER UP ONLY >	11
M3L RXD Low < POWER UP ONLY >	12
M3L ENABLE Low < POWER UP ONLY >	13
M3L TXD & RXD Low < POWER UP ONLY >	14
Compact Text test fail < POWER UP ONLY >	15
A V switch cannot power on reset < Chassis Initialisation >	16
Cannot initialise jungle (after initial power on checked out OK) - < Chassis Initialisation >	17
NVM acknowledge fail after initialisation (STBY +5V-same as micro!)	18
Multiple devices with no acknowledge < POWER UP ONLY >	19
Compact text run-time failure < MAY NOT BE FATAL-DISPLAY ON ERROR READER >	20
A V SWITCH response failure after power up check (+9V test)	21
JUNGLE/CHROMA controller response failure after power up check (+9V test)	22
Compact text does not respond (+5V test)	23
MSP run-time failure < MAY NOT BE FATAL-DISPLAY ON ERROR READER >	24
M3L bus Clock low time out after data send (run-time failure)	25
M3L bus Clock low time out after data send (at power up check)	26
M3L bus Clock low time out after data send (at initialisation)	27

Flash Timing Example : e.g. error number 3.

Stby LED

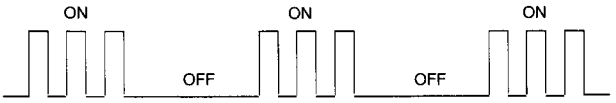

SECTION 5
DIAGRAMS

BLOCK DIAGRAM (1)

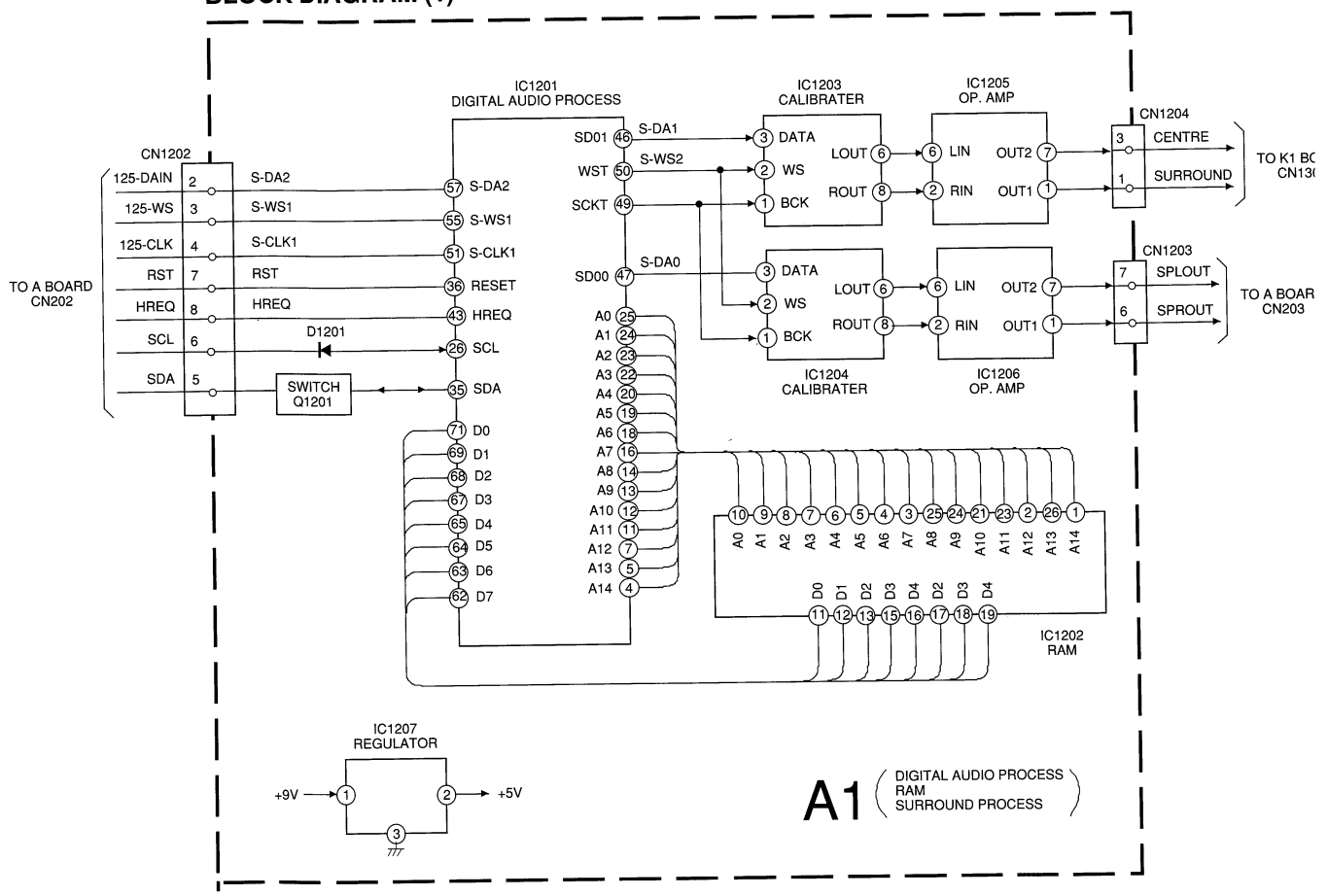

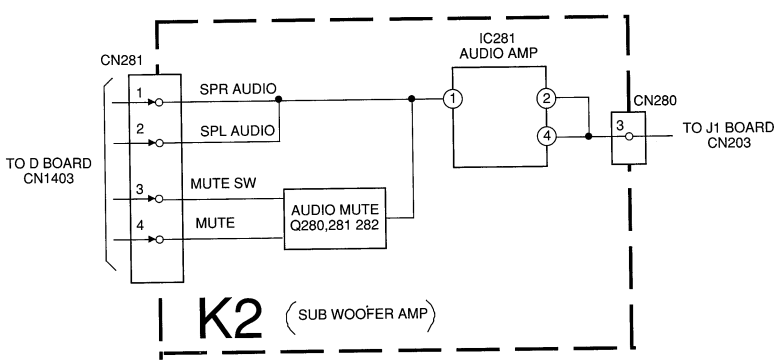

BLOCK DIAGRAM (2)

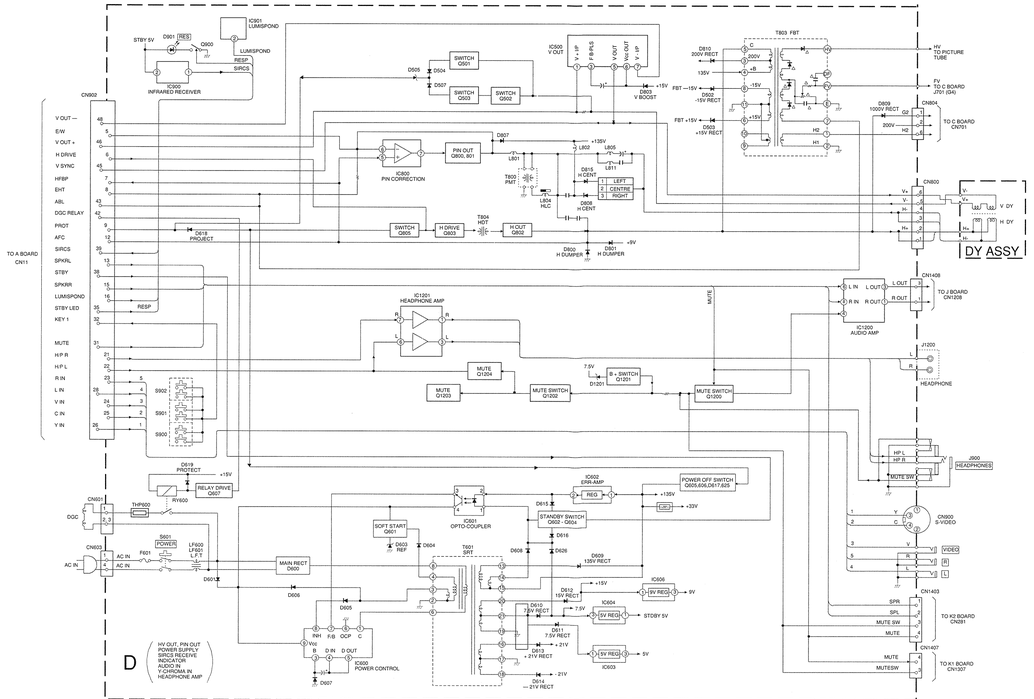

KV-29F3 KV-29F3

BLOCK DIAGRAM (3)

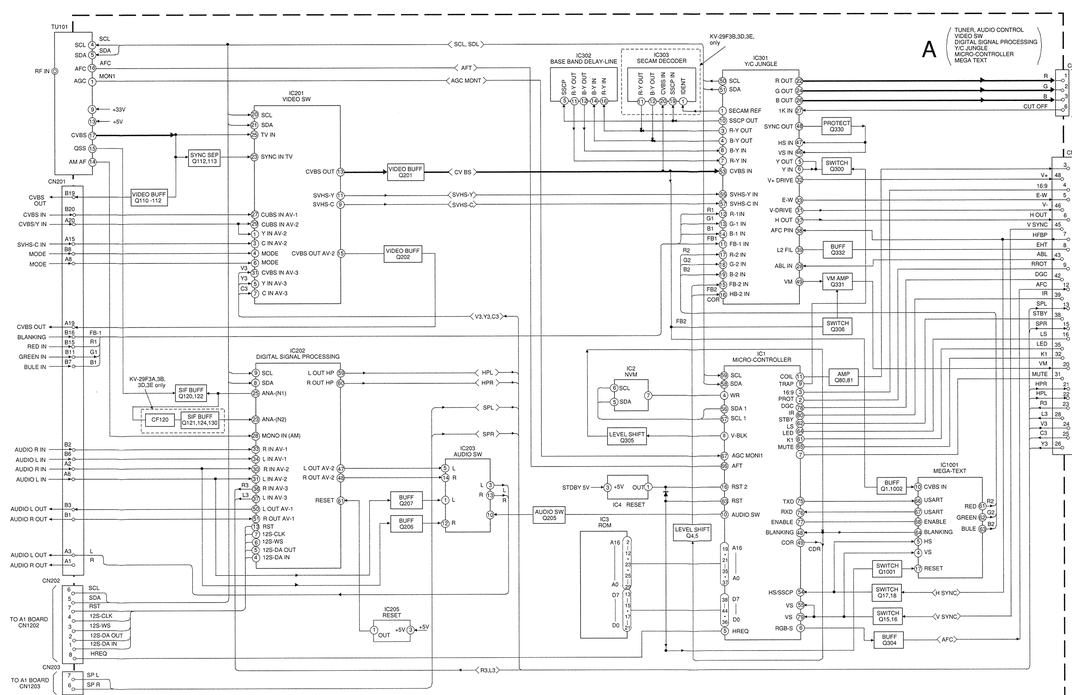

BLOCK DIAGRAM (4)

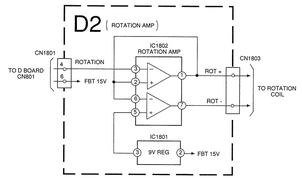

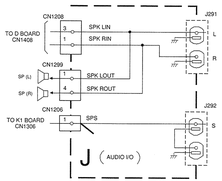

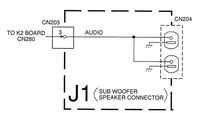

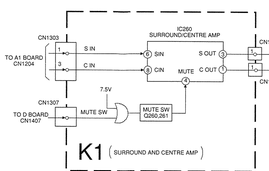

5-2. CIRCUIT BOARDS LOCATION

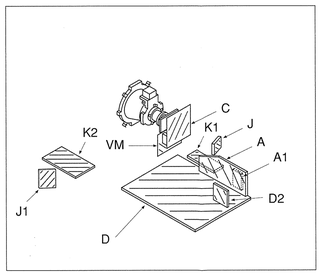

5-3. SCHEMATIC DIAGRAMS AND PRINTED WIRING BOARDS

Note :

- All capacitors are in μF unless otherwise noted. pF: μμF 50WV or less are not indicated except for electrolytic and tantalums.
- All resistors are in ohms.
  k = 1000 , M = 1000K
- Indication of resistance, which does not have one for rating electrical power, is as follows.

Pitch : 5 mm
Rating electrical power ⅛ W

- : nonflammable resistor.
- : internal component.
- : panel designation, or adjustment for repair.
- All variable and adjustable resistors have characteristic curve B, unless otherwise noted.
- : earth - ground.
- : earth - chassis.
- : no mounted.

Note : The components identified by shading and marked ⚠ are critical for safety. Replace only with the part number specified.

Note : Les composants identifies par une trame et une marque ⚠ sont critiques pour la securite.
Ne les remplacer que par une piece portant le numero specifie.

Reference information

RESISTOR	: RN	METAL FILM
	: RC	SOLID
	: FPRD	NONFLAMMABLE CARBON
	: FUSE	NONFLAMMABLE FUSIBLE
	: RS	NONFLAMMABLE METAL OXIDE
	: RB	NONFLAMMABLE CEMENT
	: RW	NONFLAMMABLE WIREWOUND
	: ※	ADJUSTABLE RESISTOR
COIL	: LF-8L	MICRO INDUCTOR
CAPACITOR	: TA	TANTALUM
	: PS	STYROL
	: PP	POLYPROPYLENE
	: PT	MYLAR
	: MPS	METALIZED POLYESTER
	: MPP	METALIZED POLYPROPYLENE
	: ALB	BIPOLAR
	: ALT	HIGH TEMPERATURE
	: ALR	HIGH RIPPLE

- Readings are taken with a colour-bar signal input.
- Readings are taken with 10M digital multimeter.
- Voltages are dc with respect to ground unless otherwise noted.
- Voltage variations may be noted due to normal production tolerances.
- All voltages are in V.
- Circled numbers are waveform references.
- : B+ bus.
- : signal path. (RF)

D [HV OUT, PIN OUT, POWER SUPPLY, CONTROL SW, AUDIO IN Y-CHROMA IN, HEADPHONE IN, SIRCS RECEIVE, INDICATION]

D Board

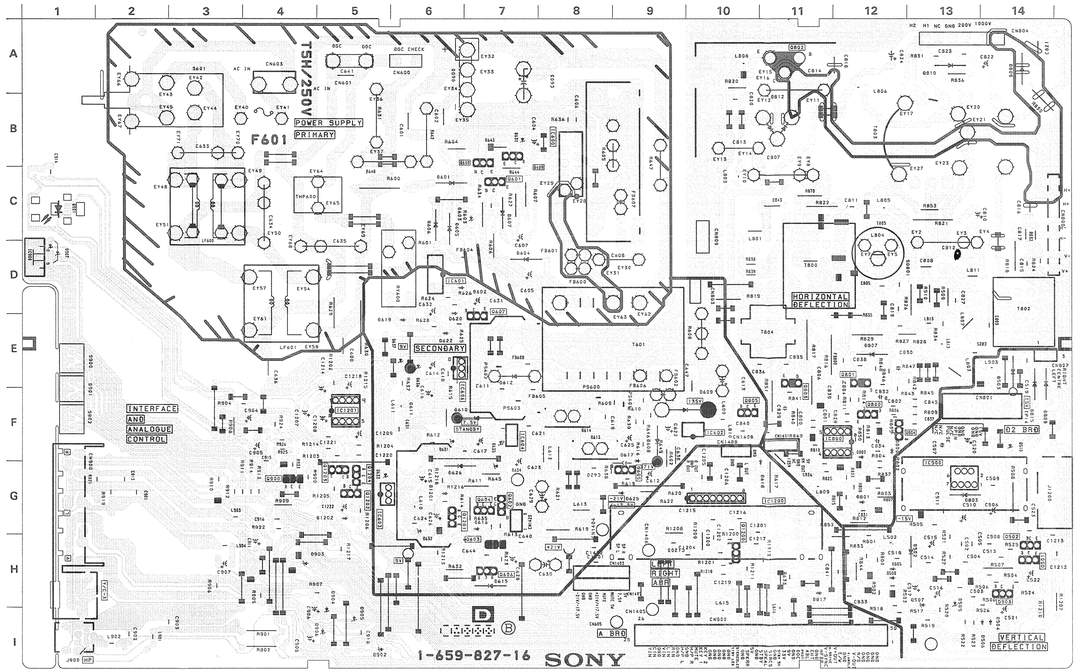

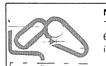

NOTE:
The circuit indicated as left contains high voltage of over 600 Vp-p. Care must be paid to prevent an electric shock in inspection or repairing.

D BOARD

IC		DIODE	
IC500	G-13	D600	A-7
IC600	B-8	D601	C-6
IC601	D-6	D603	C-7
IC602	F-10	D604	D-7
IC603	G-5	D605	C-6
IC604	F-7	D606	C-6
IC606	E-6	D607	C-7
IC800	F-12	D608	F-9
IC900	D-1	D609	F-9
IC901	C-1	D610	F-7
IC1200	G-10	D611	F-6
IC1201	F-5	D612	E-7
TRANSISTOR		D613	F-8
Q501	H-14	D614	F-8
Q502	H-14	D615	H-7
Q503	H-14	D616	G-7
Q601	C-7	D617	F-9
Q602	G-7	D618	F-11
Q603	H-7	D619	E-6
Q604	G-7	D620	E-6
Q605	F-9	D622	E-6
Q606	H-7	D625	G-9
Q607	D-7	D626	G-6
Q800	F-12	D631	F-6
Q801	E-12	D800	F-12
Q802	A-11	D801	G-12
Q803	E-11	D802	G-12
Q805	F-10	D803	F-13
Q900	G-4	D807	E-12
Q1200	H-10	D808	E-14
Q1201	G-6	D809	A-14
Q1202	G-5	D810	A-13
Q1203	G-5	D812	B-11
Q1204	G-5	D815	E-14
DIODE		D817	H-11
D500	H-12	D901	C-1
D502	H-13	D902	I-5
D503	I-14	D903	H-4
D504	H-11	D904	H-5
D505	H-13	D905	I-5
D506	I-14	D906	I-5
D507	H-13	D1201	G-6

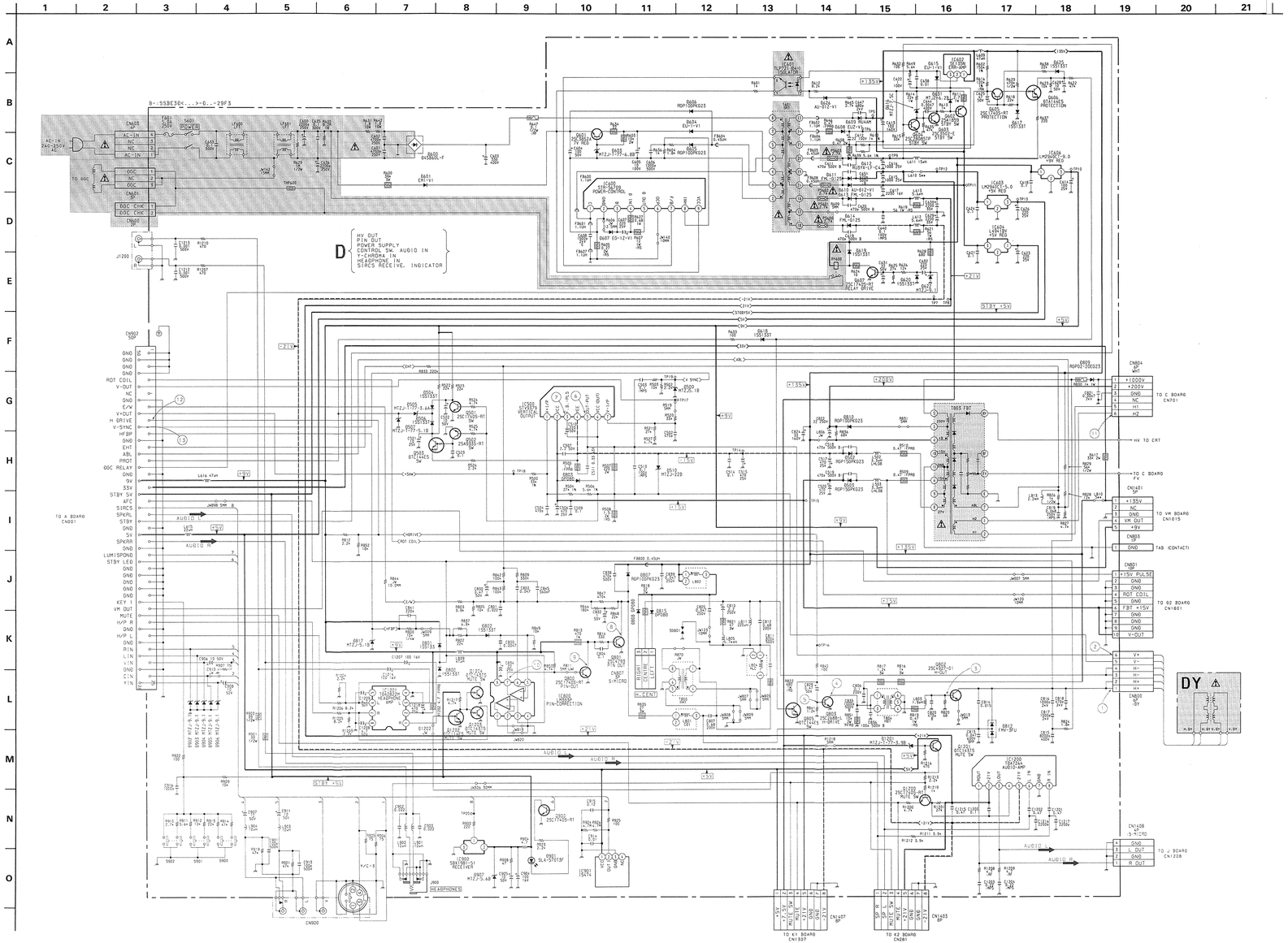

WAVEFORMS D BOARD

① 1.2K Vp-p (H)	② 56.0 Vp-p (V)	③ 13.0 Vp-p (H)	④ 178 Vp-p (H)
⑤ 2.6 Vp-p (H)	⑥ 56 Vp-p (V)	⑦ 31 Vp-p (V)	⑧ 140 Vp-p (H)
⑨ 3.9 Vp-p (H)	⑩ 1.0 Vp-p (H)	⑪ 28 Vp-p (H)	⑫ 3.0 Vp-p (H)
⑬ 5.5 Vp-p (V)			

D BOARD TRANSISTOR VOLTAGE TABLE

Transistor Voltage Table

Ref No	B Base	C Collector	E Emitter
Q501	-0.1	0.2	-
Q502	0.1	-5.8	-
Q503	-5.8	-12.0	-12.0
Q602	72.0	7.5	72.7
Q603	0	72.0	-
Q604	0.7	-	-
Q605	0.5	-	0.3
Q606	-	-	12.0
Q607	-	12.0	-
Q800	0.2	3.1	-
Q801	0.3	17.0	-
Q802	-0.2	143.3	-
Q803	-0.6	99.8	-
Q805	-	3.6	-
Q900	-	5.4	-
Q1200	2.9	21.5	4.6
Q1201	3.4	5.0	3.0
Q1202	2.8	-	-

D BOARD IC VOLTAGE TABLE

IC Voltage Table

Ref No.	Pin No.	Voltage (V)
IC500	1	1.5
	2	15.0
	3	-12.3
	4	-14.0
	5	0.1
	6	15.2
	7	1.4
IC600	1	170.0
	2	-62.4
	3	-62.6
	4	-62.2
	5	-62.0
	6	-62.6
	7	-62.4
	8	-62.0
	9	-58.0
IC601	1	64.3
	2	63.0
	3	-62.5
	4	-58.6
IC602	1	130.0
	2	63.2
	3	-0.1
IC800	3	0.9
	5	1.5
	6	2.0
	7	0.2
	8	9.0
IC1200	2	21.7
	4	21.5
	5	-21.7
IC1201	1	4.0
	2	9.0
	3	4.0
	5	0.5
	8	0.5

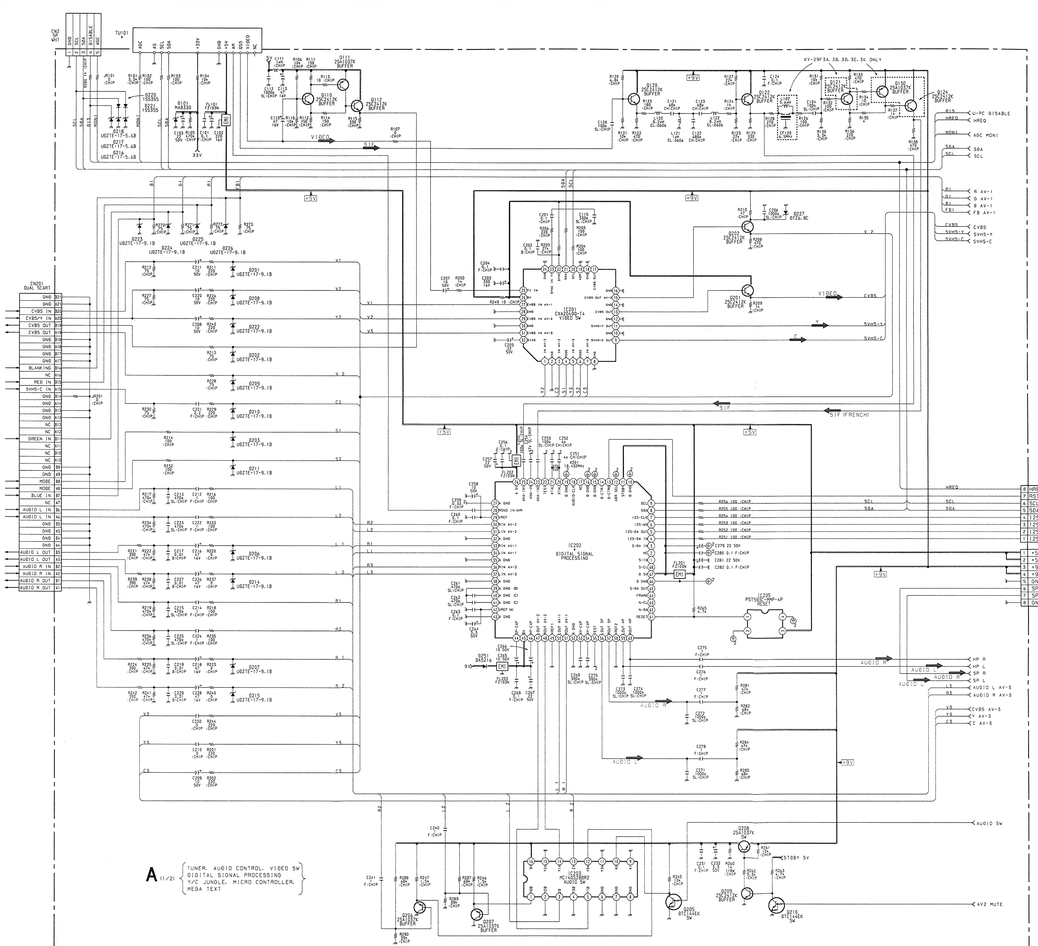

A (1/2)

TUNER, AUDIO CONTROL, VIDEO SW
DIGITAL SIGNAL PROCESSING
Y/C JUNGLE, MICRO CONTROLLER,
MEGA TEXT

A BOARD * MARK

Model / Ref. No.	29F3A	29F3B	29F3D	29F3E	29F3K	29F3R	29F3U
C370	—	2.2UF	2.2UF	2.2UF	2.2UF	2.2UF	—
C372	—	0.1UF	0.1UF	0.1UF	0.1UF	0.1UF	—
C373	—	0.22UF	0.22UF	0.22UF	0.22UF	0.22UF	—
D370	—	BAS216	BAS216	BAS216	BAS216	—	—
IC3	TMS27P020-15FML	TMS27P020-15FML	TMS27P020-15FML	TMS27P020-15FML	TMS27P020-15FML	TMS27P020-15FML	TMS27P020-15FMBWS11
IC202	MSP3400C-PS-C6-T	MSP3410-D-PS-F7-T	MSP3400C-PS-C6-T	MSP3410-D-PS-F7-T	MSP3400C-PS-C6-T	MSP3400C-PS-C6-T	MSP3410-D-PS-F7-T
IC303	—	TDA8395T/N3	TDA8395T/N3	TDA8395T/N3	TDA8395T/N3	TDA8395T/N3	—
R117	2K 5%	2.2K 5%	3K 5%	2K 5%	2K 5%	2K 5%	2K .5%
R135	330	330	330	330	330	680	680
R1012	470	470	470	470	470	—	—
TU101	TUVIF (AEP)	TUVIF (FR)	TUVIF (AEP)	TUVIF (AEP)	TUVIF (AEP)	TUVIF (AEP)	TUVIF (UK)

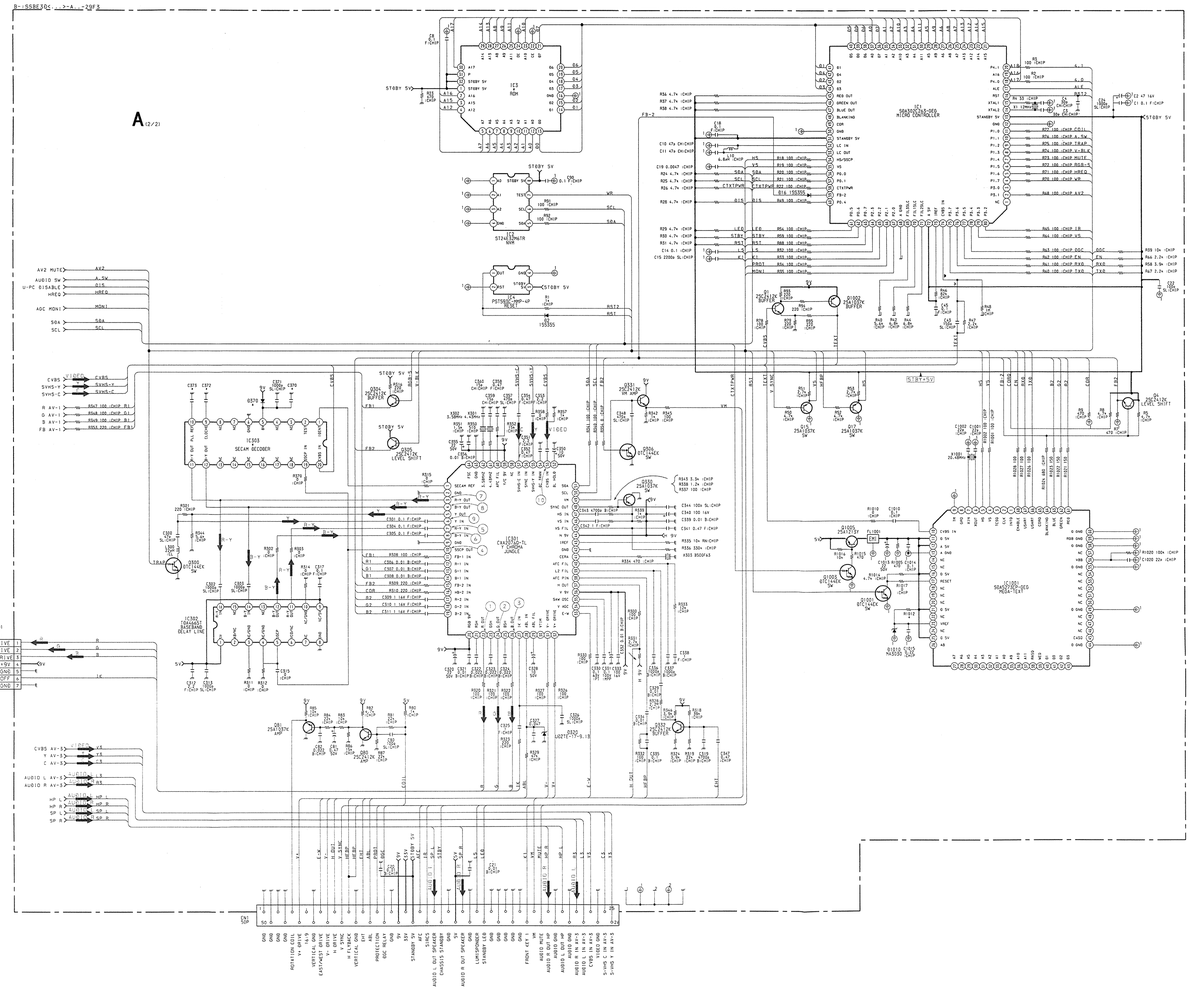

A (2/2)

A(1/2) BOARD IC VOLTAGE TABLE

IC Voltage Table		
Ref No	Pin No.	Voltage (V)
IC201	13	4.4
	15	4.4
	20	3.5
	21	2.7
	22	4.9
	23	4.4
	24	0
	25	4.4
	26	8.8
	32	4.4
IC202	4	2.8
	6-7	0.1
	8	3.0
	9	3.6
	11	4.7
	13	4.7
	20-21	2.4
	23	0.2
	25	1.5
	26	4.8
	28	3.8
	29	2.6
	39-42	3.8
	44	7.1
	45	8.0
	46	7.1
	47-48	3.8
	53-54	3.8
IC203	1	4.7
	3	3.8
	5	3.8
	10	9.0
	12	4.7
	13	3.8
	14	3.8

A (2/2) BOARD TRANSISTOR VOLTAGE TABLE

Transistor Voltage Table			
Ref No	B Base	C Collector	E Emitter
Q1	3.7	4.8	3.1
Q4	0.1	4.8	-
Q15	-	4.3	-
Q80	2.6	2.2	-
Q81	2.4	-	3.0
Q300	-	0.2	-
Q304	-	4.8	-
Q305	-	4.8	-
Q306	-	0.1	-
Q330	4.5	-	5.1
Q331	6.3	8.8	5.7
Q332	3.1	8.8	2.5
Q1001	4.4	-	-

A (1/2) BOARD TRANSISTOR VOLTAGE TABLE

Transistor Voltage Table			
Ref No	B Base	C Collector	E Emitter
Q110	1.8	8.2	1.2
Q112	1.5	8.8	0.8
Q113	1.8	-	-
Q114	5.4	6.0	-
Q120	9.0	8.8	3.7
Q121	1.5	5.4	0.9
Q122	5.4	8.8	4.7
Q124	-	8.8	-
Q130	8.2	5.3	-
Q201	4.4	8.8	3.7
Q202	4.4	8.8	3.7
Q205	-	6.0	-
Q206	4.1	-	4.7
Q207	4.1	-	4.7

WAVEFORMS A BOARD

① 3.5 Vp-p (H)	② 3.0 Vp-p (H)	③ PAL.SECAM 3.0 Vp-p (H)	③ NTSC 2.3 Vp-p (H)	④ 5.1 Vp-p (H)
⑤ 1.0 Vp-p (H)	⑥ 1.4 Vp-p (H)	⑦ PAL.NTSC 0.6 Vp-p (H)	⑦ SECAM 0.5 Vp-p (H)	⑧ PAL 0.8 Vp-p (H)
⑧ SECAM 1.5 Vp-p (H)	⑧ NTSC 0.9 Vp-p (H)	⑨ PAL.SECAM 0.5 Vp-p (H)	⑨ NTSC 0.4 Vp-p (H)	⑩ 1.0 Vp-p (H)

A (2/2) BOARD IC VOLTAGE TABLE

IC Voltage Table

Ref No	Pin No	Voltage (V)
IC1	2	3.6
	3-4	4.8
	5	0.5
	7	4.8
	9	4.8
	11	2.4
	13	4.8
	14-15	2.3
	16-17	4.8
	48	4.0
	51	4.8
	52-53	2.4
	54	0.7
	55	0.2
	56-57	4.8
	58	2.8
	59	3.5
	60	2.4
	62	0.7
	63	4.4
	65	4.8
	66	2.1
	67	2.0
	69-71	2.3
	72	4.8
	73	1.5
	74	1.2
	75-77	4.8
	79	0.2
	80	4.8
IC2	5-8	4.8
IC3	1	4.8
	31-32	4.8
IC4	1	4.8
	3	4.8
IC301	1	1.5
	3-4	5.6
	5	3.6
	6	5.0
	7-8	5.4
	10	0.6
	12-14	5.4
	16	4.0
	17-19	5.4
	20	8.8
	22-23	2.2
	24	2.0
	25	2.4
	26	2.0
	27	4.0
	28	6.6
	29	8.8
	31-33	3.0
	34	4.0
	35	4.6
	36	8.8
	37	3.1
	38	3.4
	39	5.3
	40	4.2
	41	2.3
	43	1.7
	44	8.8
	45	2.5
	46	3.9
	47	3.0
	48	4.4
	49	6.3
	50-51	0.1
	53	3.9
	54	5.0
	55-56	4.2
	58-59	8.8
	60	5.3
IC301	61	5.0
	62	7.6
	1	4.8
IC302	5	0.7
	9	4.8
	11-12	3.0
	14	1.3
	16	1.3
IC303	1	1.5
	5	8
	11-12	5.6
	19	0.6
	20	3.9
IC1001	4	0.2
	5	0.7
	6	1.7
	7	1.8
	10	0.4
	11-12	4.8
	16	4.8
	17	0
	21	4.8
	23	3.0
	25	4.8
	56	0
	61	1.3
	62-63	1.4
	64	0
	66	4.6
	67	4.7
	68	4.0

A [TUNER, AUDIO CONTROL VIDEO SW, DIGITAL SIGNAL PROCESSING
Y/C JUNGLE MICRO CONTROLLER, MEGA TEXT]

A Board <Conductor Side>

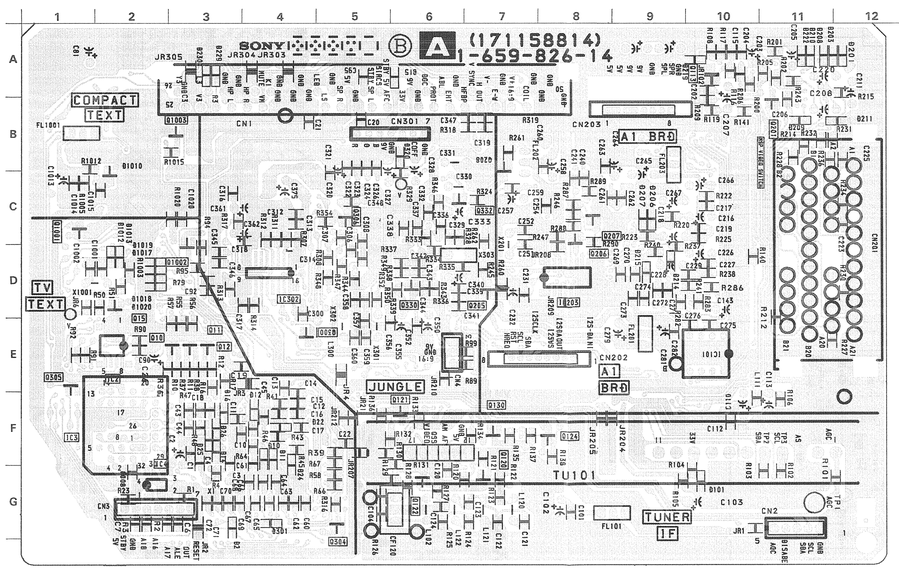

A Board <Component S

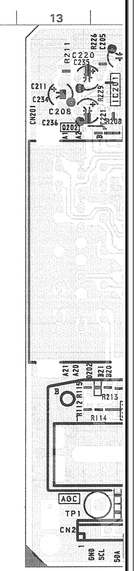

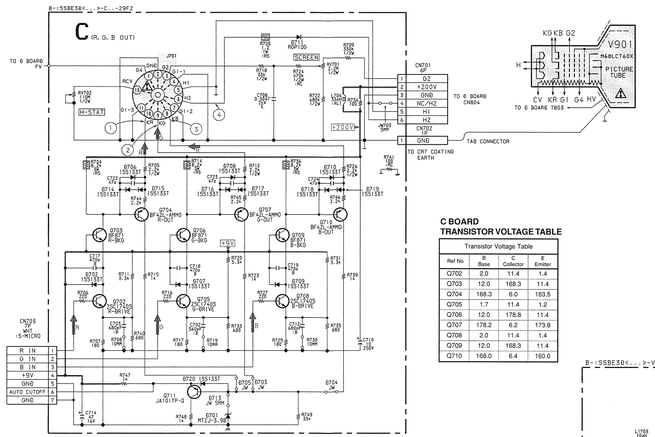

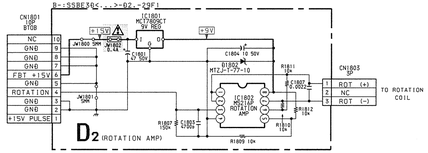

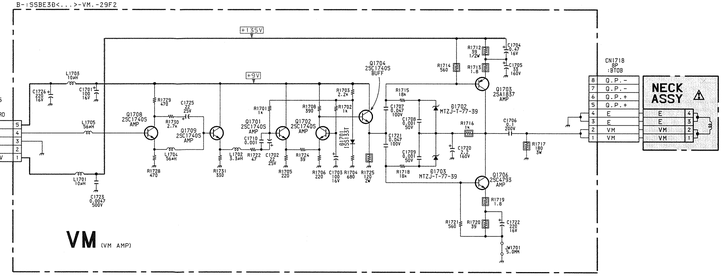

C BOARD TRANSISTOR VOLTAGE TABLE

Transistor Voltage Table

Ref No	B Base	C Collector	E Emitter
Q702	2.0	11.4	1.4
Q703	12.0	168.3	11.4
Q704	168.3	6.0	163.5
Q705	1.7	11.4	1.2
Q706	12.0	178.8	11.4
Q707	178.2	6.2	173.8
Q708	2.0	11.4	1.4
Q709	12.0	168.3	11.4
Q710	168.0	6.4	160.0

VM BOARD TRANSISTOR VOLTAGE TABLE

Transistor Voltage Table

Ref No	B Base	C Collector	E Emitter
Q1701	2.5	8.8	1.8
Q1702	2.5	5.5	1.8
Q1703	134.3	71.8	134.8
Q1704	5.5	8.8	4.8
Q1706	1.0	71.8	0.4
Q1708	2.9	6.6	2.2
Q1709	2.2	8.8	1.5

D2 BOARD IC VOLTAGE TABLE

IC Voltage Table

Ref No	Pin No	Voltage (V)
IC1802	1-2	2.8
	3	3.0
	5-6	4.4
	7	6.2
	8	9.0

WAVEFORMS C BOARD

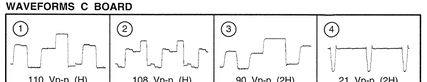

C [R, G, B OUT] **VM** [VM AMP]

C Board

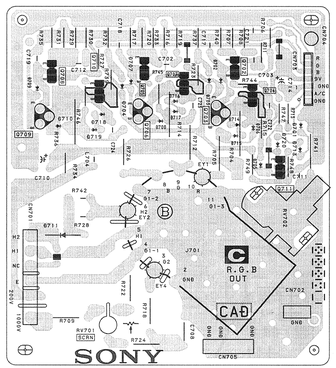

VM Board

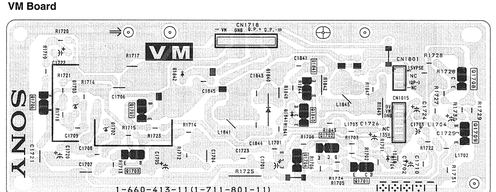

D2 [ROTATION AMP] **J1** [SUB WOOFER SPEAKER CONNECTOR]

D2 Board

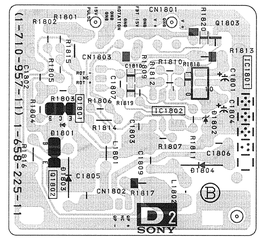

J1 Board

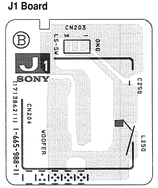

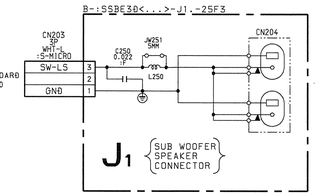

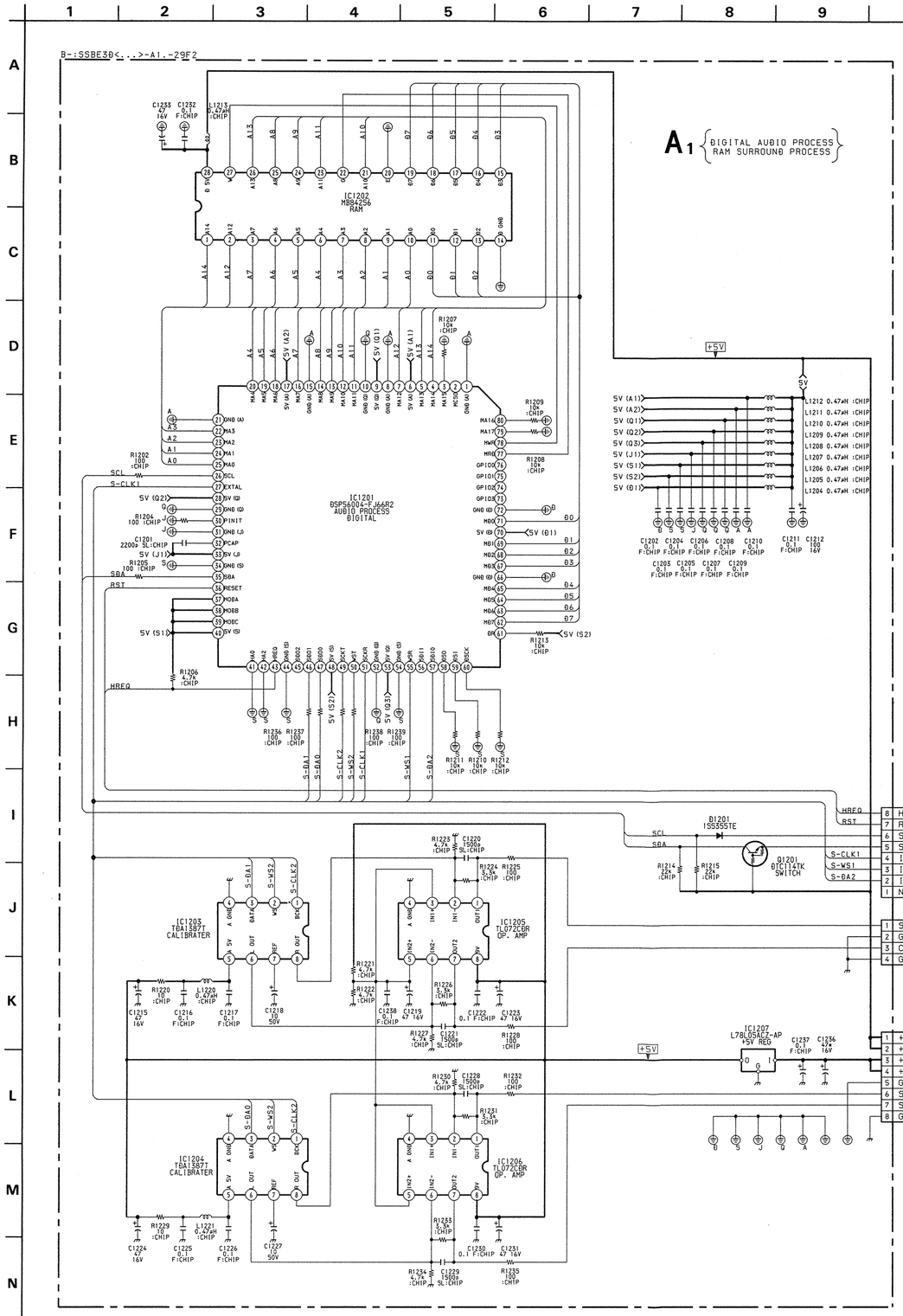

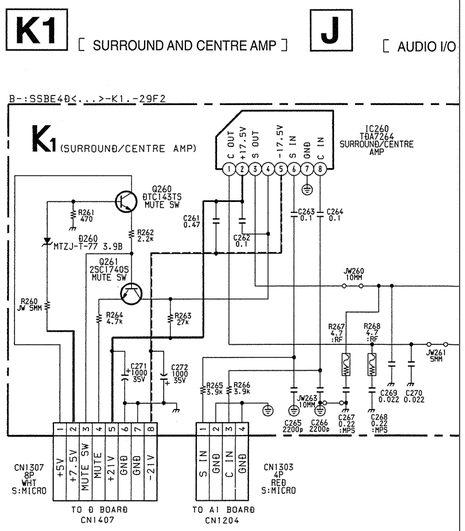

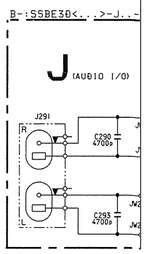

K1 BOARD IC VOLTAGE TABLE

IC Voltage Table		
Ref No	Pin No	Voltage (V)
IC260	2	21.7
	4	21.6
	5	-21.8

K1 BOARD TRANSISTOR VOLTAGE TABLE

Transistor Voltage Table			
Ref No	B Base	C Collector	E Emitter
Q260	3.4	2.9	2.9
Q261	2.9	21.6	4.8

A1 BOARD IC VOLTAGE TABLE

IC Voltage Table		
Ref No	Pin No	Voltage (V)
IC1201	6	4.8
	9	4.8
	17	4.8
	26	3.5
	27	2.3
	28	4.8
	32	1.1
	33	4.8
	35	3.0
	36-40	4.8
	43	4.8
	48	4.8
	53	4.8
	58	4.8
	61	4.8
	70	4.8
	77-78	4.8
IC1202	22	4.8
	27-28	4.8
IC1203	5	5.0
	6	2.5
	7	0.8
	8	2.5
IC1204	5	5.0
	6	2.5
	7	0.8
	8	2.5
IC1205	1	2.3
	2-3	2.5
	5-6	2.5
	7	2.3
	8	5.0
IC1206	1	2.3
	2-3	2.5
	5-7	2.5
	8	5.0

A1 Board <Condu

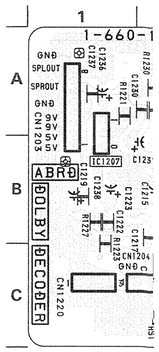

6-1. CHASSIS

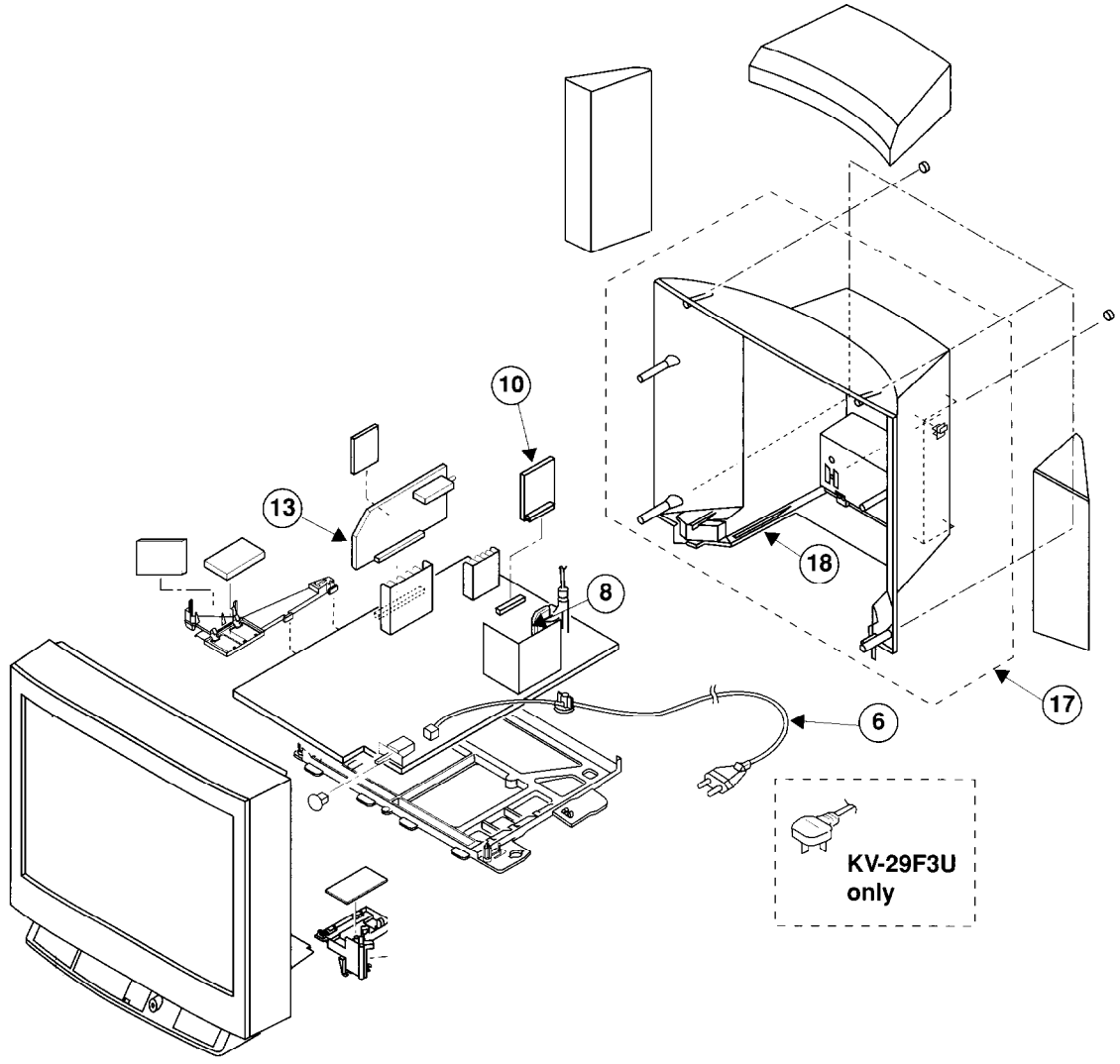

6-2. PICTURE TUBE

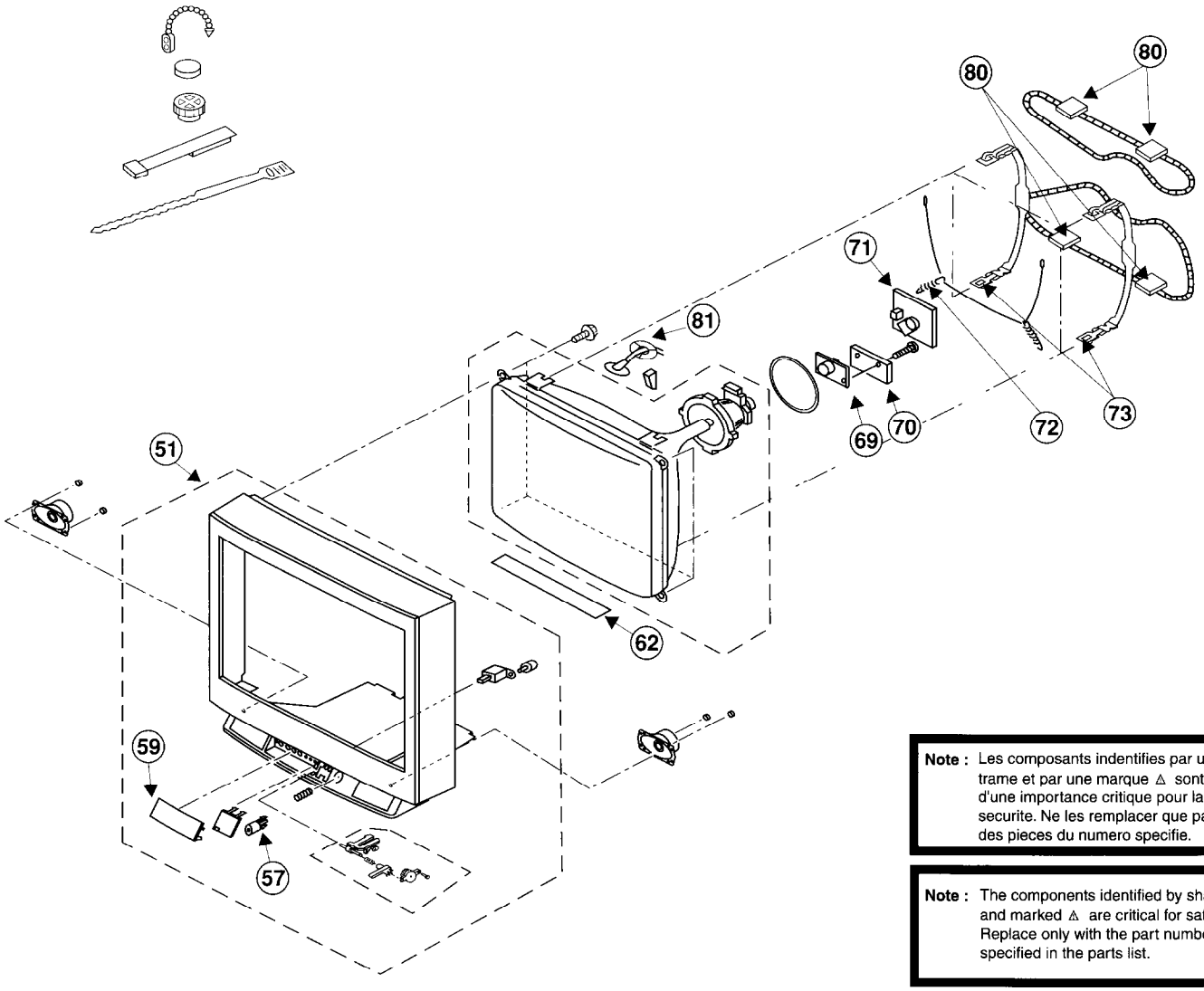

Note : Les composants indentifies par une trame et par une marque ⚠ sonte d'une importance critique pour la securite. Ne les remplacer que par des pieces du numero specifie.

Note : The components identified by shading and marked ⚠ are critical for safety. Replace only with the part numbers specified in the parts list.
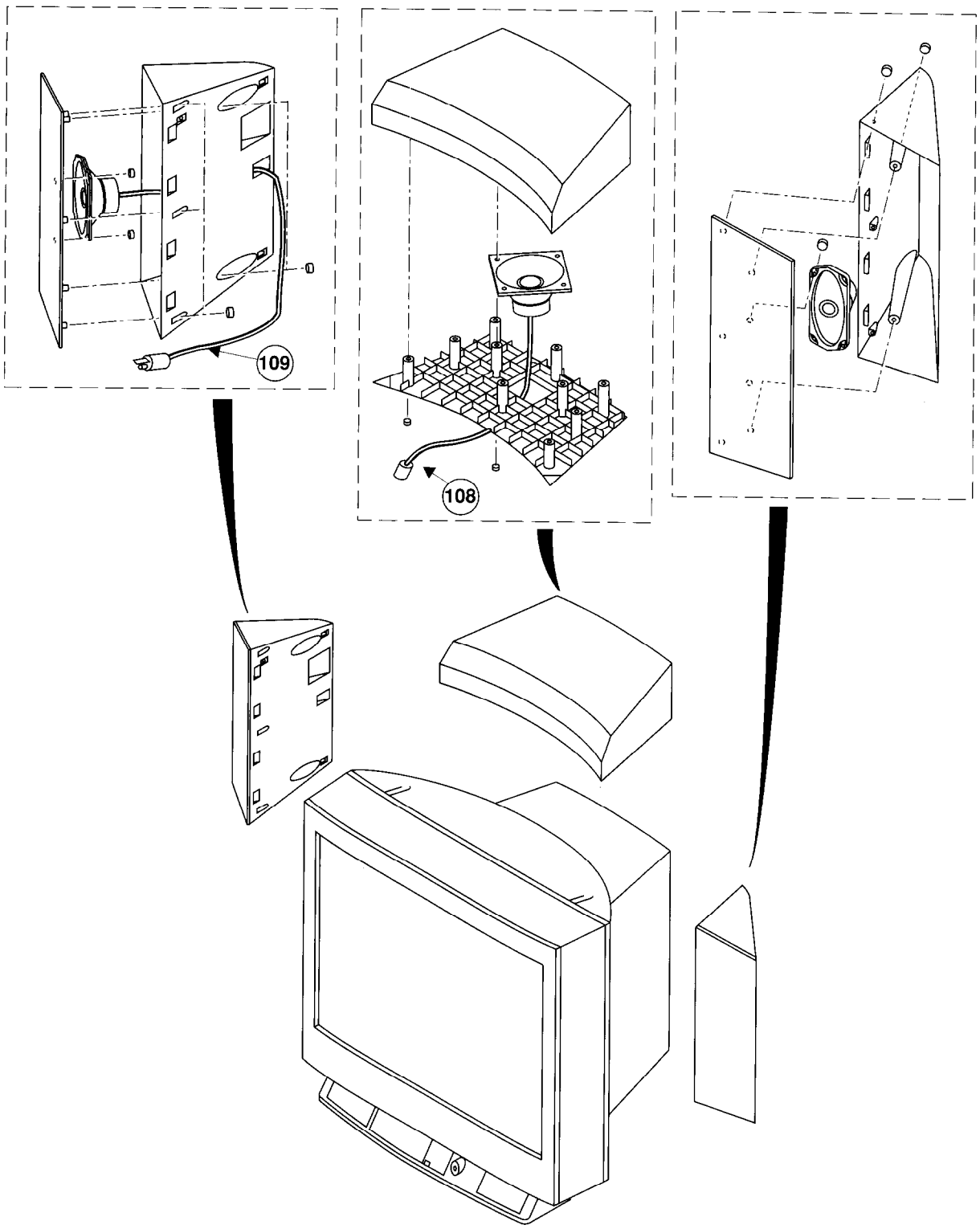
6-3. BOX SPEAKER