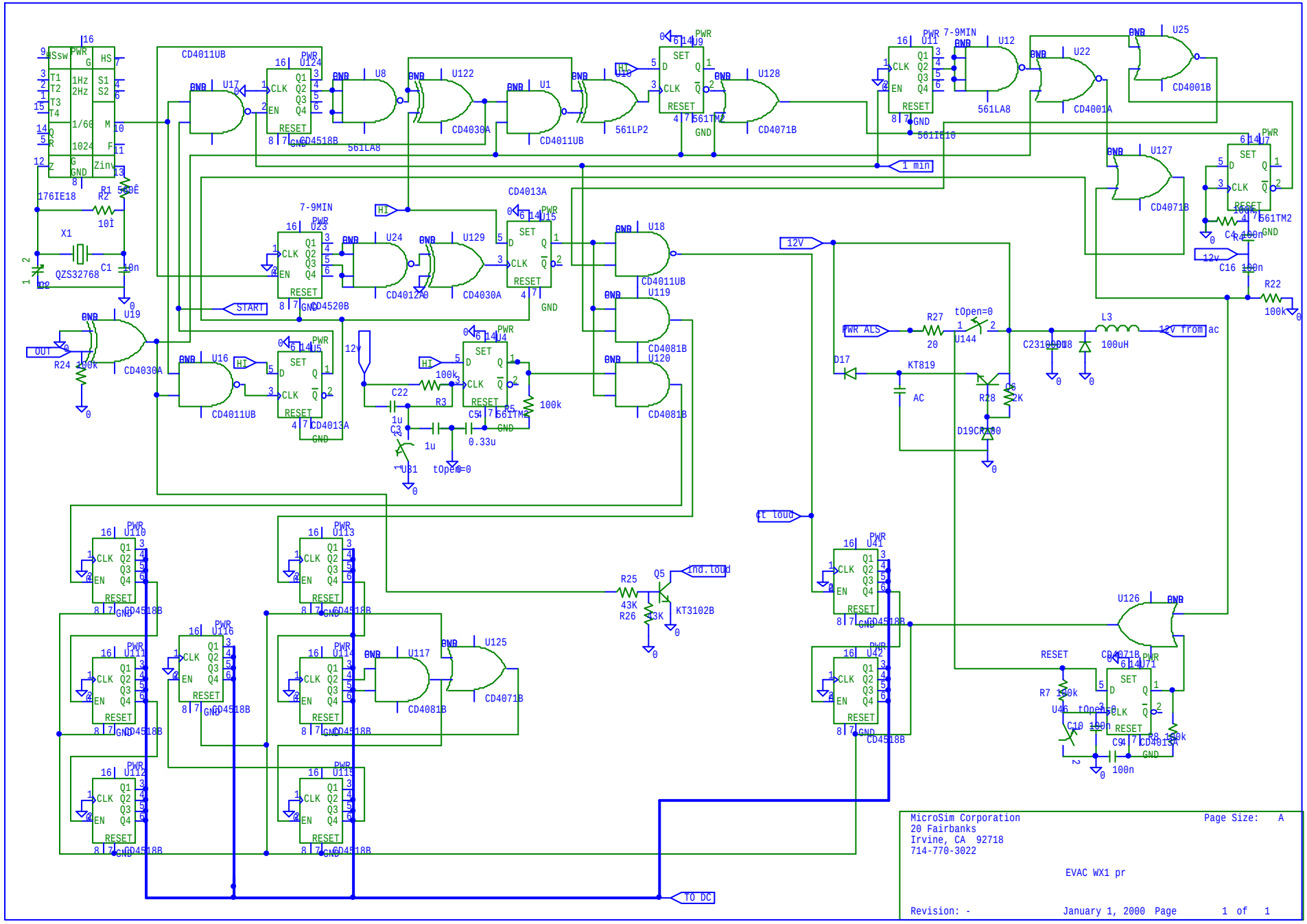
MicroSim Corporation
20 Fairbanks
Irvine, CA 92718
714-770-3022
Page Size: A
EVAC WX1 pr
Revision: -
January 1, 2000 Page 1 of 1

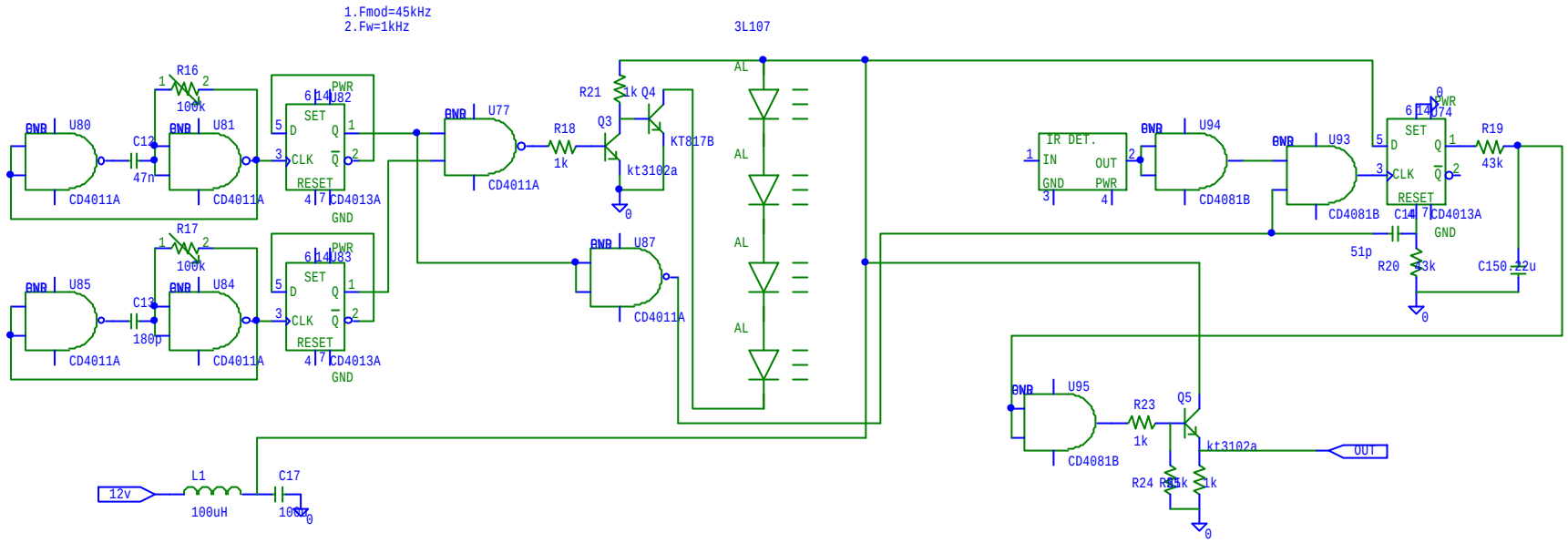

MicroSim Corporation
20 Fairbanks
Irvine, CA 92718
714-770-3022

Page Size: A4

EVAC WX1 det.

Revision: -

January 1, 2000 Page 2 of 3

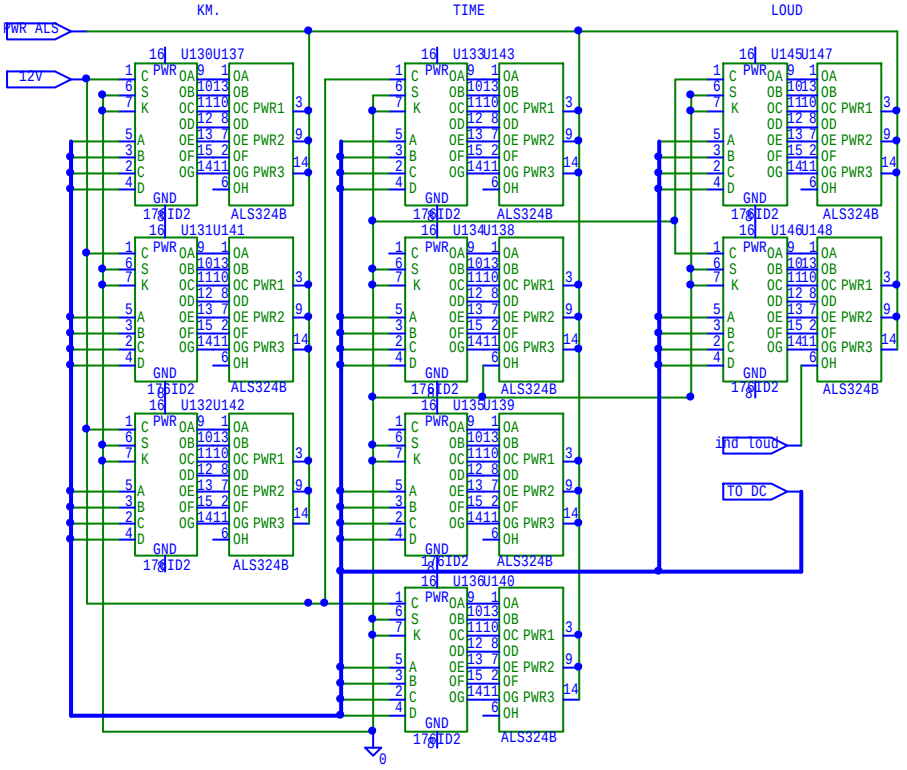

MicroSim Corporation
20 Fairbanks
Irvine, CA 92718
714-770-3022

Page Size: A

EVAC WX1 ind.

Revision: -

January 1, 2000 Page 1 of 1