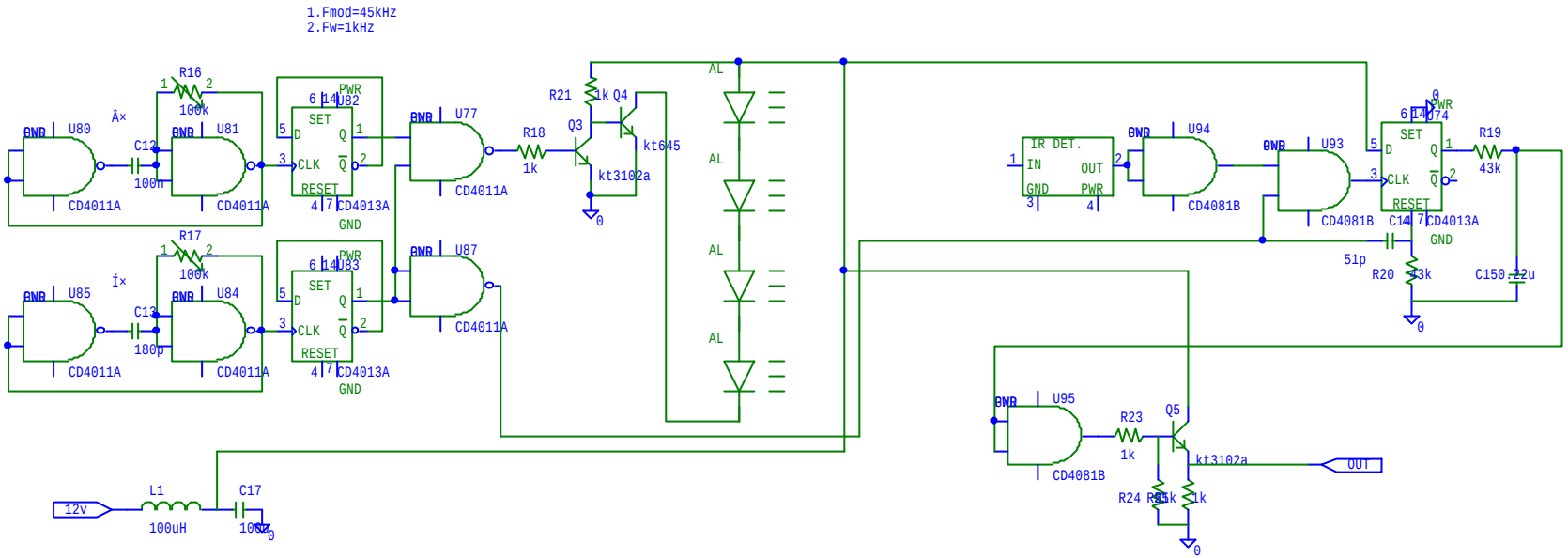

MicroSim Corporation
20 Fairbanks
Irvine, CA 92718
714-770-3022

Page Size: A4

evac1_8

Revision: -

January 1, 2000 Page 1 of 1